USER'S MANUAL

Manual Elevators

Manual Operated Elevators

ORIGINAL INSTRUCTIONS

REFERENCE Manual Elevators	REFERENCE DESCRIPTION Manual Elevatos
	VarcoBJ BV Nijverheidsweg 45 4879 AP Etten-Leur P.O. Box 17 4870 AA Etten-Leur The Netherlands Tel + 31-76-5083000 Fax + 31-76-5046000 www.nov.com
DOCUMENT NUMBER **50000815-MAN-001**	REV **K** Dec 2016

www.nov.com

NATIONAL OILWELL VARCO

Page intentionally left blank for 2-sided printing purposes

NATIONAL OILWELL VARCO

Manual Elevators

Important: read carefully before use.

Keep for future reference.

ORIGINAL INSTRUCTION

REFERENCE Manual Elevators	REFERENCE DESCRIPTION Manual Elevators
	VarcoBJ BV Nijverheidsweg 45 4879AP Etten-Leur Tel: +31-76-5083000 Fax: +31-76-5046000
document number **50000815-MAN-001**	REV **K**

NATIONAL OILWELL VARCO

www.nov.com

Revision History

K	Dec 2016	Update
J	Jan 2016	Update
I	Dec. 2015	Update
H	Dec 2014	Update
G	Sept 2014	Update
F	-	Not released
E	15.11.2010	Update
D	20.04.2010	Update
C	03.11.2008	Update
B	05.09.2006	Update
A	21.12.2005	Update
-	20.04.2004	Issued for Implementation
Rev	**Date**	**Reason for issue**

This document is TCE-controlled

Change Description

Revision	Change Description
E	Check procedure SJX added
E	Removal of hinge pin added
E	SLX data added
E	Changed partnumber cotterpin SJX
G	DSJX-elevator added
G	MSDS and drawings DSJX added
G	Chapter CA-WD-drawings deleted and Chapter Parts and spare parts added
G	SBX7 added
G	Test specifications/wedge and measure instructions added
G	Changes in entire manual
H	Chapter operation changed with respect to allowable lifting operation
I	Added Note (D)SJX in chapter Part and Spare parts
I	All Chapters: small changes
J	Chapter Specification removed:Warning; Loading elevators is not permitted unless the elevator is free to rotate.
K	Chapter Installation: Lockbar procedure added Chapter Specification: Chapter with added numbers new style

Table of Contents

General information . . . 9
Instructions . . . 9
Special information . . . 11
Intended audience . . . 11
Conventions . . . 12
Notes, Cautions, and Warnings . . . 12
Note: . . . 12
Caution: . . . 12
Warning: . . . 12
Illustrations . . . 12
Safety Requirements . . . 12
General System Safety Practices . . . 13
Personnel Training . . . 13
Recommended Tools . . . 13
Replacing Components . . . 13
Routine Maintenance . . . 13
Proper Use of Equipment . . . 13
Lifting . . . 13
Limited warranty . . . 14
Identification numbers . . . 14
Warning plates . . . 14
CE marking . . . 15
Design rating according to API 8C . . . 15
General specifications . . . 17
Elevator restrictions . . . 17
Elevator bore charts . . . 18
18° taper elevator . . . 18
Drill pipe . . . 18
Drill pipe bore codes . . . 19
Drill collars with zip lift recess bore chart . . . 20
Plain drill collars with lift plugs bore chart . . . 20
Tubing bore chart . . . 20
Casing bore chart . . . 20
Elevator specifications, requirements & sizes . . . 21
Slip type elevators MYC, YC & HYC series . . . 21
MYC Casing Elevator . . . 21
YC Casing Elevator . . . 22
Dimensions & weights . . . 22
HYC, MYC & YC Slip & inserts . . . 22
HYC, MYC & YC Guide plates . . . 23
Slip Type Elevators YT, MYT & HYT Series . . . 24
YT Slip Tubing Elevator . . . 24
HYT Tubing Elevator . . . 24
MYT Slip Tubing Elevator . . . 24

Table of Contents

Dimensions & weights . . . 24
Slip assemblies . . . 25
Collar Type Elevators A Series . . . 26
Technical specifications A SERIES . . . 26
Technical specifications A SERIES . . . 27
18º Type Elevators G Series . . . 30
Technical specifications G SERIES . . . 30
Technical specifications G SERIES WITH WEAR BUSHING . . . 31
Optional equipment part numbers . . . 32
X Series Side Door Elevators . . . 32
Technical specifications X SERIES . . . 32
SMX series . . . 36
SX-series . . . 40
Link handle kit . . . 41
Single joint elevators . . . 42
SJL & SPL series elevators . . . 42
Technical specifications SJL SERIES . . . 43
Technical specifications SPL SERIES . . . 46
Size components SPL 5° elevators . . . 46
Size components SPL 12° & 18° elevators . . . 47
SJL/SPL swivel suspension sling* . . . 47
SJX & D-SJX SERIES ELEVATORS . . . 48
Technical specifications SJX Series . . . 48
DSJX 12 sTon with drill pipe 18° insert bore chart . . . 51
DSJX 12 sTon with drill collars with zip lift recess bore chart . . . 51
DSJX 12 sTon with plain drill collars with lift plugs bore chart . . . 51
SBX7 . . . 53
Size components SBX7 elevator . . . 53
SJH SERIES MANUAL ELEVATOR . . . 55
Technical specifications . . . 55
Size components Jaws SJH 2.3/8" – 4.1/2" pn 50003135Y* / 10108036-001 55
Jaws SJH 7" – 10.3/4" pn 50003175Y* / Contact NOV . . . 56
DC DOLLY . . . 56
Lubrication and maintenance . . . 57
Recommended inspections . . . 57
Safety . . . 57
Recommended grease . . . 58
Recommended slot coating . . . 58
Inspection . . . 58
Daily Inspection (when tool is in use) . . . 58
6 Monthly Inspection (when tool is in use) . . . 59
Annual (1 year) Inspection (when tool is in use) . . . 60
Magnetic Particle Inspection . . . 61
Evaluations of indications . . . 61

Table of Contents

Qualifications and certification . . . 61
Criteria for API 8A & 8C PSL 1 equipment; castings . . . 61
Criteria for API 8C PSL 2 equipment; castings . . . 61
Criteria for API 8A & 8C equipment; forgings (SBX7) . . . 62
Criteria for API 8A & 8C equipment; weldings and castings . . . 62
Lubrication . . . 63
Daily lubrication (elevator in use) . . . 63
Additional daily lubrication SJH (elevator in use) . . . 63
Additional daily lubrication SBX7 (elevator in use) . . . 63
Drill collar with zip-lift recess bore . . . 64
How to calculate collar type bore for casing and tubing . . . 64
Tool joint wear data drill-pipe . . . 65
Wear criteria general notes . . . 66
General dimensions . . . 66
Casing & tubing . . . 66
Y, G, X, A, SJL, SPL-series wear data . . . 66
Wear data SJX . . . 66
Wear data DSJX . . . 66
Drill collar with bore . . . 66
Wear drill collar . . . 67
Calculate wear drill collar . . . 67
Wear casing / tubing . . . 67
Calculate casing /tubing collar type bore wear . . . 67
Wear data DSJX hinge pins . . . 67
SJX/DSJX functional check verification pin . . . 68
Wear data/criteria SBX7 . . . 69
Repair data . . . 69
Pin wear data . . . 69
Wear data link ear . . . 69
YT, MYT, HYT wear data Setting Ring . . . 70
Installation and commissioning . . . 71
Installing the elevators . . . 71
All link ear type elevators (SBX, G, Y, X & A-series) . . . 71
SJL/SPL type elevators . . . 71
SJX (in combination with CRT) . . . 71
SJX as a stand alone elevator . . . 71
SJH type elevator . . . 71
DSJX as a stand alone elevator . . . 72
Installing the balancing strap (p/n 15320) for Y, G, A series . . . 72
Cross-over list SMX . . . 73
Safe working area (SWA) . . . 74
Operation . . . 75
Safe Working Area (SWA) . . . 75
Vertical/non-vertical lifting . . . 75

Table of Contents

Lifting applications . . . 76
Crushing load . . . 77
Daily functional test prior to operation . . . 78
Routine lubrication prior to operation . . . 78
Operation of Y, G, X, A, SJL & SPL-series . . . 78
Operation notes Y-series elevator . . . 79
Slip removal . . . 79
Opening and closing (elevator without verification pin) . . . 79
Opening and closing (elevator with verification pin) . . . 83
Operational notes on SPL-series elevator . . . 85
Recommendations . . . 85
Operational notes SMX-elevator . . . 86
Operation of the SJH-elevator . . . 87
Operation of the (D)SJX-elevator . . . 88
Operation of the DSJX-elevator with 2 way sling . . . 89
Operations SBX7 . . . 90
Use SBX7 in combination with a Riser Running Tool (RRT) . . . 90
Installing bushings in elevator SBX7 . . . 91
Assembly and dis-assembly . . . 93
Safety . . . 93
Field service . . . 93
Shop repairs . . . 93
Elevator disassembly guidelines . . . 94
Splitting the lock bar by drilling through. . . . 94
Assembly of the lockbar . . . 95
Assembly SJX and DSJX-elevator . . . 96
Assembly inserts of the DSJX-elevator . . . 97
Assembly SJH-elevator . . . 98
SBX7 dis-assembly . . . 99
SBX7 assembly . . . 99
G-type elevator assembly . . . 99
Assembly verification lock for SMX elevator . . . 103
SLX elevator: mounting the Latch spring . . . 104
TA/TMA assembly . . . 105
Trouble shooting . . . 107
Overview possible problems Y, G, X & A series . . . 107
Overview possible problems SJX and DSJX . . . 107
Overview possible problems SJH . . . 108
Pipe is stuck in a slip type elevator . . . 109
Appendixes . . . 111
Risk assessment acc. to EN12100:2010 . . . 111
Conclusion Risk Assessment . . . 111
Applicable standards . . . 111
Receipt, storage, transport & decommissioning . . . 112

Table of Contents

Immediatelly after receipt* . . . 112
Inspection and test during storage . . . 112
Storage general recommendations . . . 112
Storage after use . . . 112
Transport . . . 113
Decommissioning . . . 113
Torque values (US) for bolts . . . 114
Torque values (metric) for bolts . . . 115
Part lists and slip assemblies . . . 117
Collar type center latch elevators A series . . . 117
Parts list A series . . . 117
HYC, MYC & YC series . . . 118
Part list HYC, MYC & YC series . . . 119
Slip assemblies HYC, MYC & YC series . . . 120
HYT series . . . 123
Parts list HYT series . . . 123
YT series . . . 124
Parts list YT series . . . 125
Slip assemblies YT & HYT series . . . 126
Slip assemblies YT & HYT series weights . . . 127
MYT series . . . 128
Parts list MYT series . . . 128
Slip assemblies part numbers MYT series . . . 129
18° center latch elevators G serie . . . 130
Parts list G-series . . . 130
Collar type side door elevators X series . . . 132
SLX-series. . . . 132
Parts list SLX series . . . 132
SMX series . . . 134
Major parts SMX . . . 134
Parts list for SMX series . . . 134
Link handle kit . . . 135
Parts link handle kit . . . 135
SBX7 . . . 135
SX-series . . . 136
Parts list SX series . . . 136
SLX-DD-Series . . . 137
Single joint elevators . . . 137
SPL series . . . 137
Parts list SPL . . . 137
SJL series . . . 138
SJX series . . . 138
Parts list for SJX . . . 138
DSJX . . . 140

Table of Contents

Major components 140
Parts list for DSJX with inserts 140
SJH-series 141
Parts list SJH-series 141
DC DOLLY 142
Partnumbers 142
Spare parts 142
Drawings & test procedures 143
Material Safety Data Sheets 143
Test procedures 143
Wedge and Bore Measuring Instructions 143
Dimensional drawings 143
Wear data drawings 143
Drawings 145
CA drawings 145

General information

Instructions

Original Instructions are published in English; in the event the end-user may wish to obtain a translation of these in the official language of the country in which the machinery is to be used please contact your local NOV representative. Please note that this service may not be free of charge. Original Instruction can be downloaded from www.NOV.com/drilling

Оригиналните инструкции са публикувани на английски език; в случай, че крайният потребител желае да получи превод на тези инструкции на официалния език на държавата, в която се използва оборудването, моля, свържете се с вашия местен представител на NOV. Моля, имайте предвид, че тази услуга може да не е безплатна. Оригиналните инструкции могат да бъдат изтеглени от: www.NOV.com/drilling

Původní návod je zveřejněn v angličtině; pokud si koncový uživatel přeje získat překlad návodu v úředním jazyce země, ve které se zařízení bude používat, může se obrátit na místního zástupce společnosti NOV. Upozorňujeme, že tato služba nemusí být zdarma. Původní návod je k dispozici ke stažení na adrese www.NOV.com/drilling

Juhendi originaal on avaldatud inglise keeles. Kui lõppkasutaja soovib tõlget selle riigi ametlikus keeles, kus seadmeid kasutatakse, palume pöörduda NOV-i kohaliku esindaja poole. Palume silmas pidada, et see teenus ei pruugi olla tasuta. Juhendi originaali saab alla laadida veebisaidilt www.NOV.com/drilling.

Instrukcijų originalas yra skelbiamas anglų kalba. Jei galutinis vartotojas norėtų gauti šių instrukcijų vertimą į šalies, kurioje įrengimai turi būti naudojami, oficialiąją kalbą, reikėtų kreiptis į vietinį NOV atstovą. Prašome atkreipti dėmesį, kad ši paslauga gali būti mokama. Instrukcijų originalą galima parsisiųsdinti iš tinklalapio www.NOV.com/drilling

Šo norādījumu oriģinālvaloda ir angļu valoda; gadījumā, ja jūs kā gala lietotājs vēlaties saņemt norādījumu tulkojumu tās valsts oficiālajā valodā, kurā šī mašīna tiks lietota, lūdzu, sazinieties ar vietējo „NOV” pārstāvi. Lūdzu, ņemiet vērā, ka šis var nebūt bezmaksas pakalpojums. Norādījumus oriģinālvalodā varat lejupielādēt no vietnes www.NOV.com/drilling

A használati utasítások eredetileg angol nyelven kerülnek kiadásra. Amennyiben a végfelhasználó meg szeretne kapni azon ország hivatalos nyelvén készült fordításukat, ahol a gépet használni fogják, akkor kérjük, vegye fel a kapcsolatot a NOV helyi képviselőjével. Kérjük, vegye figyelembe, hogy ezt a szolgáltatást esetleg nem tudjuk díjmentesen nyújtani. Az eredeti használati utasítás a www.NOV.com/drilling oldalról tölthető le.

Oryginalne instrukcje zostały wydane w języku angielskim. Aby uzyskać tłumaczenie tych instrukcji na język kraju, w którym urządzenie ma być używane, należy skontaktować się z lokalnym przedstawicielem firmy NOV. Należy pamiętać, że taka usługa jest płatna. Oryginalną instrukcję można pobrać na stronie www.NOV.com/drilling

As Instruções Originais são publicadas em inglês; se o utilizador final pretender obter uma tradução destas instruções no idioma oficial do país onde a maquinaria vai ser utilizada, deverá contactar o representante local da NOV. Chamamos a atenção para o facto de este serviço poder não ser gratuito. As Instruções Originais podem ser transferidas a partir do site www.NOV.com/drilling

Instrucțiunile originale sunt publicate în limba engleză; în eventualitatea în care utilizatorul final dorește să obțină o traducere a acestora în limba oficială a țării în care se vor folosi utilajele, vă rugăm să luați legătura cu reprezentantul NOV local. Vă rugăm să rețineți că este posibil ca acest serviciu să nu fie gratuit. Instrucțiunile originale pot fi descărcate de pe www.NOV.com/drilling

Pôvodný návod je vydaný v anglickom jazyku. Ak si koncový používateľ želá získať preklad v úradnom jazyku štátu, v ktorom sa stroj bude používať, obráťte sa na miestneho zástupcu spoločnosti NOV. Upozorňujeme, že táto služba nemusí byť bezplatná. Originálny návod je k dispozícii na prevzatie zo stránky www.NOV.com/drilling.

Originalna navodila so objavljena v angleščini; če končni uporabnik želi prevod teh navodil v uradnem jeziku države, kjer se bodo stroji uporabljali, se obrnite na lokalnega predstavnika podjetja NOV. Ta storitev mogoče ne bo brezplačna. Originalna navodila lahko prenesete s spletne strani www.NOV.com/drilling

De originale anvisninger er udgivet på engelsk. Måtte slutbrugeren ønske at få en oversættelse af disse i det officielle sprog af det land, hvor maskineriet skal bruges, henvises der til den lokale NOV-repræsentant. Bemærk venligst at denne service måske ikke er gratis. De originale anvisninger kan downloades fra www.NOV.com/drilling

Die Originalanleitung erscheint in englischer Sprache. Wünscht der Endverbraucher eine Übersetzung dieser Anleitung in der offiziellen Sprache des Landes, in dem die Maschine benutzt werden soll, dann wenden Sie sich bitte an Ihren örtlichen NOV-Vertreter. Bitte beachten Sie, dass diese Dienstleistung möglicherweise nicht kostenlos ist. Die Originalanleitung können Sie unter folgendem Link herunterladen: www.NOV.com/drilling.

Las instrucciones originales son publicadas en inglés. En el caso de que el usuario final quiera obtener una traducción en el idioma oficial del país donde la maquinaria será utilizada, debe ponerse en contacto con su representante local de NOV. Tenga en cuenta que este servicio puede conllevar gastos. Es posible descargar las instrucciones originales desde www.NOV.com/drilling.

Alkuperäiset ohjeet on julkaistu englannin kielellä; mikäli loppukäyttäjä haluaa saada niiden käännöksen sen maan virallisella kielellä, jossa konetta käytetään, on otettava yhteys paikalliseen NOV-edustajaan. On mahdollista, että tästä palvelusta peritään maksu. Alkuperäiset ohjeet voi ladata osoitteesta www.NOV.com/drilling

Les consignes originales sont publiées en anglais; dans le cas où l’utilisateur final demande une traduction de ces consignes vers la langue officielle du pays dans lequel la machine doit être utilisée, veuillez contacter le représentant NOV sur place. Le service de traduction peut être payant. Les consignes originales peuvent être téléchargées du site www.NOV.com/drilling.

Foilsítear Treoracha bunúsacha sa Bhéarla; i gcás ar mian leis an úsáideoir aistriúchán a fháil i dteanga oifigiúil na tíre ina bhfuil an t-innealra le húsáid déan teagmháil le d'ionadaí áitiúil NOV le do thoil. Bíodh a fhios agat gur féidir nach bhfuil an tseirbhís sin saor in aisce. Is féidir Treoir Bhunúsach a íoslódáil ag www.NOV.com/drilling

Οι αρχικές οδηγίες δημοσιεύθηκαν στην Αγγλική γλώσσα. Αν ο τελικός χρήστης θέλει να λάβει μια μετάφραση των οδηγιών στην επίσημη γλώσσα της χώρας που θα χρησιμοποιηθεί το μηχάνημα, μπορείτε να επικοινωνήσετε με τον τοπικό σας αντιπρόσωπο της NOV. Προσέξτε γιατί αυτή η υπηρεσία μπορεί να μην είναι δωρεάν. Τις αρχικές οδηγίες μπορείτε να τις κατεβάσετε από το www.NOV.com/drilling.

Le Istruzioni originali sono pubblicati in lingua inglese, nel caso in cui l'utente finale intenda ottenere una traduzione di queste istruzioni nella lingua ufficiale del paese in cui la macchina deve essere usata si prega di contattare il rappresentante locale della NOV. Facciamo inoltre rilevare che questo servizio può non essere a titolo gratuito. Le Istruzioni originali possono essere scaricate dal sito: www.NOV.com/drilling

Istruzzjonijiet oriġinali bl-Ingliż; jekk l-uttent aħħari jixtieq jakwista traduzzjoni ta' dawn fil-lingwa uffiċjali tal-pajjiż fejn il-makkinarju għandu jintuża kkuntattja r-rappreżentant lokali tan-NOV. Innota li dan is-servizz huwa b'xejn. L-istruzzjoni oriġinali jista' jitniżżel minn www.NOV.com/drilling

De oorspronkelijke instructies zijn in het Engels gepubliceerd. Als de eindgebruiker een vertaling van de instructies wil ontvangen in de officiële taal van het land waar de machine zal worden gebruikt, neem dan contact op met uw plaatselijke NOV vertegenwoordiger. Let op dat er kosten aan deze service verbonden kunnen zijn. De oorspronkelijke instructies kunnen worden gedownload op www.NOV.com/drilling.

Originalinstruktionerna publiceras på engelska. Om slutanvändaren önskar en översättning av dessa till det officiella språket i det land där utrustningen ska användas, kontakta den lokala NOV-representanten. Observera att denna tjänst eventuellt inte är kostnadsfri. Originalinstruktionerna kan laddas ned från www.NOV.com/drilling

Special information

Detailed descriptions of standard workshop procedures, safety principles and service operations are not included. Please note that this manual may contain warnings about procedures which could damage equipment, make it unsafe, or cause PERSONAL INJURY. Please understand that these warnings cannot cover all conceivable ways in which service (whether or not recommended by NOV) might be done, or the possible hazardous consequences of each conceivable ways. Anyone using service procedures or tools, whether or not recommended by NOV, must be thoroughly satisfied that neither personal safety nor equipment safety will be jeopardized.

All information contained in this manual is based upon the latest product information available at any time of printing. We reserve the right to make changes at any time without notice.

Intended audience

This manual is intended for use by field engineering, installation, operation, and repair personnel. Every effort has been made to ensure the accuracy of the information contained herein. NOV® 2016, Varco LP, will not be held liable for errors in this material, or for consequences arising from misuse of this material.

Conventions

Notes, Cautions, and Warnings

Notes, cautions, and warnings provide readers with additional information, and to advise the reader to take specific action to protect personnel from potential injury or lethal conditions. They may also inform the reader of actions necessary to prevent equipment damage. Please pay close attention to these advisories.

Note:

The note symbol indicates that additional information is provided about the current topics.

Caution:

The caution symbol indicates that potential damage to equipment or injury to personnel exists. Follow instructions explicitly. Extreme care should be taken when performing operations or procedures preceded by this caution symbol.

Warning:

The warning symbol indicates a definite risk of equipment damage or danger to personnel. Failure to observe and follow proper procedures could result in serious or fatal injury to personnel, significant property loss, or significant equipment damage.

Illustrations

Illustrations (figures) provide a graphical representation of equipment components or screen snapshots for use in identifying parts or establishing nomenclature, and may or may not be drawn to scale.

For component information specific to your rig configuration, see the technical drawings included with your NOV documentation.

Safety Requirements

NOV equipment is installed and operated in a controlled drilling rig environment involving hazardous situations. Proper maintenance is important for safe and reliable operation. Procedures outlined in NOV manuals are the recommended methods of performing operations and maintenance.

The operator shall carry out a health and safety risk assessment in the workplace.

CAUTION: To avoid injury to personnel or equipment damage, carefully observe requirements outlined in this section.

General System Safety Practices

The equipment discussed in this manual may require or contain one or more utilities, such as electrical, hydraulic, pneumatic, or cooling water.

⚠ *CAUTION: Read and follow the guidelines below before installing equipment or performing maintenance to avoid endangering exposed persons or damaging equipment.*

- Isolate energy sources prior to beginning work.
- Avoid performing maintenance or repairs while the equipment is in operation.
- Wear proper protective equipment during equipment installation, maintenance, or repair.

Personnel Training

All personnel performing installation, operations, repair, or maintenance procedures on the equipment, or those in the vicinity of the equipment, should be trained on rig safety, tool operation, and maintenance to ensure their safety.

⚠ **WARNING: Personnel should wear protective gear during installation, maintenance, and certain operations.**

⚠ **WARNING: The elevator shall only be used by qualified and authorized personnel.**

Contact the NOV Drilling Equipment training department for more information about equipment operation and maintenance training.

Recommended Tools

Service operations may require the use of tools designed specifically for the purpose described. NOV recommends that only those tools specified be used when stated. Ensure that personnel and equipment safety are not jeopardized when following service procedures or using tools not specifically recommended by NOV.

Replacing Components

- Verify that all components (such as cables, hoses, etc.) are tagged and labeled during assembly and disassembly of equipment to ensure correct installation.
- Replace failed or damaged components with NOV certified parts. Failure to do so could result in equipment damage or injury to personnel.

Routine Maintenance

Equipment must be maintained on a routine basis. See this manual for maintenance recommendations.

⚠ *CAUTION: Failure to conduct routine maintenance could result in equipment damage or injury to personnel.*

Proper Use of Equipment

NOV equipment is designed for specific functions and applications, and should be used only for its intended purpose.

Lifting

The lifting procedures should carefully be observed and carried out according to the manual.

Limited warranty

The warranty will be void if the Elevator or parts were either:

- unauthorized modified, repaired or serviced
- replacement parts not manufactured by NOV were utilized
- not properly stored or maintained

Identification numbers

You will find the serial number of the tool stamped into the body.

Warning plates

⚠ **WARNING: Warning plates must be present on the Elevator. Do not remove the labels. When a label or warning plate has disappeared, it must be replaced.**

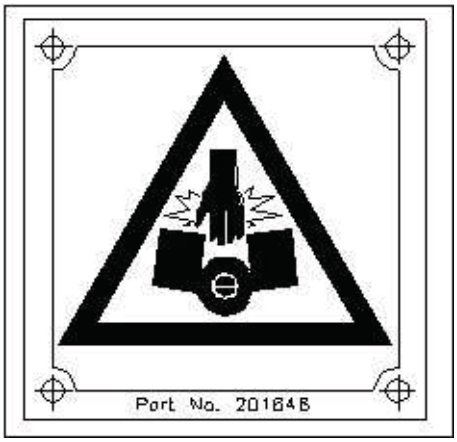

SJH-elevator: Warning plate p/n # 201646: Be careful. Keep hand out of moving parts.

Information plate p/n 50000125:Where to get the information.

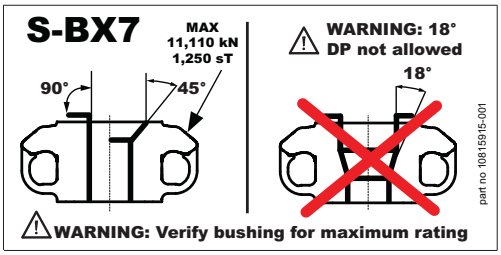

Rate tag p/n. 10815915-001 Allowed Load-Ratings for different types of tubular SBX7

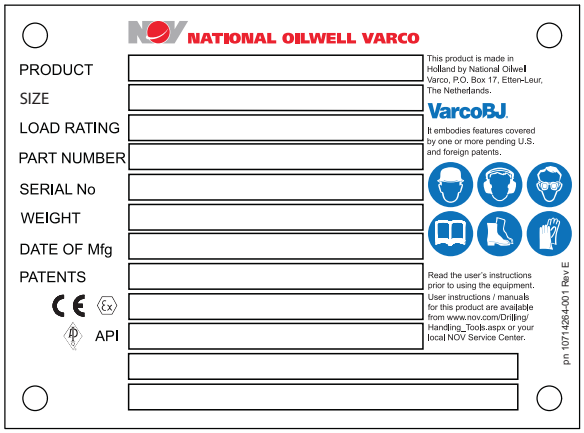

Universal name plate p/n 10714264-001 for SBX7

CE marking

Design rating according to API 8C

⚠ **WARNING: To maintain API 8C compliance whenever re-manufacture or replacing any primary load bearing component, the complete unit must be load tested and MPI according NOV standards, by an authorized NOV repair facility only.**

⚠ **WARNING: The load rating is the maximum operating load, both static AND dynamic, to be applied to the equipment. The design load is the sum of the static and dynamic loads that would induce the maximum allowable stress in an item.**

The design safety factor is established from below table as follows (for information only):

Load rating R in sTon/Tonne	Design safety factor SF_D
150 / 136 and less	3,00
150 / 136 to 500 / 454 inclusive	3,00 - (0,75 x (R - 1334) / 3114)[a] (3,00 - (0,75 x (R - 150) / 350))[b]
Over 500 / 454	2,25

a In this formula, the value of R shall be in kilonewtons
b In this formula, the value of R shall be in short tons

⚠ **WARNING: The design safety factor is intended as a design criterion and shall not under any circumstances be construed as allowing loads on the equipment in excess of the load rating.**

Page intentionally left blank

General specifications

Subject		Description
Design temperatures*	Ambient temperature range	-4°F (-20°C) up to 131°F (+55°C)
*It is up to the user to ensure the temperatures as indicated will not be exceeded		
Environment	Maximum Humidity:	100% RH
	IP Rating:	IP66
Limits	Use Limits:	Trained persons only (Users responsibility)
	Space Limits:	External limits defined by Elevator Defined in the Users Instructions
	Time Limits:	Design life = 20 years

Elevator restrictions

The Elevator is designed to be used as an elevator for vertical lifting tubular goods, and must not be used for any other purpose. Some elevators can be used for pick-up with maximum rotation of 90° in the links see diagram in chapter Operations.

⚠ **WARNING: The slips of Y series elevators will set when the elevator is raised against the Collar Box upset, which pushes down the slip-setting ring**

Elevator bore charts

Procedure

- In ordering all collar-type and 18° type BJ elevators for drill pipe, casing and tubing, first determine correct pipe size and corresponding elevator frame part number from specification tables on these pages.
- Then determine correct bore code from bore charts on this and the following pages.
- Add this number to the frame part number for the complete elevator.
- Note that the bore diagrams give bores for all BJ elevators other than BJ 18° elevators.

18° taper elevator

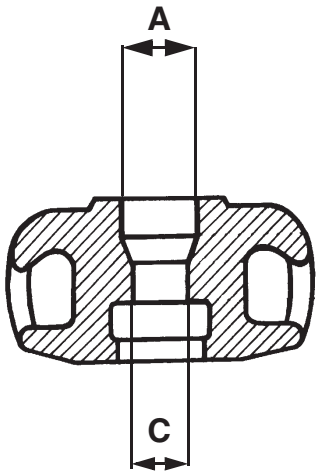

Drill pipe

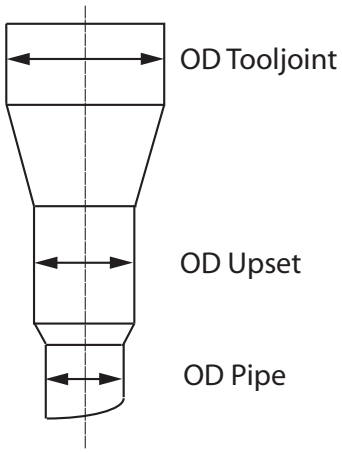

Drill pipe bore codes

Drill pipe size			Elevator					
Size	**Type Upset**	**Upset**	**Dimension**	**Dimension**	**Bore code**			
Max OD		**Max OD**	**Center bore C**	**Top bore A (new)**	**18° taper**	**Standard connection**	**Hydril Wedge***	**Grant Prideco**
2.3/8"	EU	2.9/16"	2.21/32"	4.1/4"	116	OH	WT 14S, 23, 26	XT 24, 26
						NC 26 (IF)		HT 26
						SL H90		GPDS 26
						WO		
2.7/8"	EU	3.3/16"	3.9/32"	4.3/4"	118	NC 31(IF)	WT 14S, 31	XT 31
						OH		HT 31
						SL H90		GPDS 31
						WO		
3.1/2"	IU	3.11/16"	3.25/32"	5.1/2"	119	XH	WT 14S, 31	XT 31
						NC 31(SH)		HT 31
3.1/2"	EU	3.7/8"	3.31/32"	5.1/2"	120	NC 38(IF)	WT 31, 38	XT 38
						OH		HT 38
						SL H90		GPDS 38
						WO		
4"	IU	4.3/16"	4.9/32"	6.1/2"	121	NC 40(FH)	WT 31, 38, 39	XT 38, 39
						SH		HT 38, 40
						H90		GPDS 40
4"	EU	4.1/2"	4.25/32"	6.3/4"	122	NC 46(IF)	WT 40	
						OH		
						WO		
4.1/2"	IU	4.11/16"	4.25/32"	6.3/4"	122	H90	WT 38	
4.1/2"	IEU	4.11/16"	4.25/32"	6.3/4"	122	NC 46(XH)	WT 39, 40	XT 40, 46
						FH		HT 46
						NC 38(SH)		GPDS 46
						H90		
4.1/2"	EU	5" - 5.1/8"	5.1/4"	7.1/8"	123	NC 50(IF)	WT 46	XT 50
						OH		HT 50
						WO		
5"	IEU	5.1/8"	5.1/4"	7.1/8"	123	NC 50(XH)	WT 39, 40, 46, 50	XT 46, 50
								HT 50
								GPDS 50
5"	IEU	5.1/8"	51/4"	7.1/2"	756	5.1/2" FH		
5.1/2"	IEU	5.11/16"	5.13/16"	7.7/8"	124	FH	WT 46, 50, 54, 56	XT 54, 57
								HT 55
								GPDS 55
5.1/2"	EIU		6.233"	8”	678	IF	Mannesmann	
5.1/2”	IEU	6"	6.1/8"	8.1/4"	770		WT 54, 56	XT 57
5.7/8"	IEU	6"	6.1/8"	8.1/4"	789			XR
6.5/8"	IEU	6.3/4"	5.11/16"	8.7/8"	740	FH	WT 56, 66	XT 65
								HT 65
								GPDS 65

Drill collars with zip lift recess bore chart

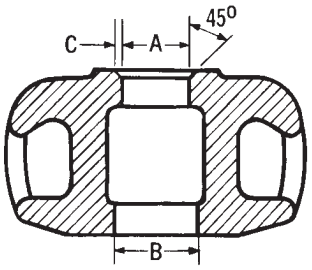

See drawing 15316-6

Plain drill collars with lift plugs bore chart

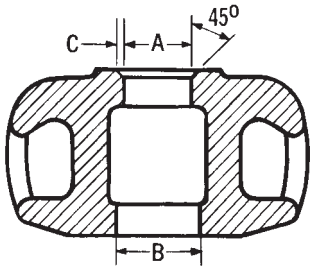

See drawing 15316-8

Tubing bore chart

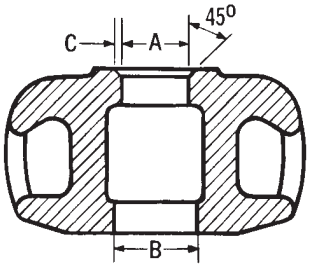

See drawing 15316-3

Casing bore chart

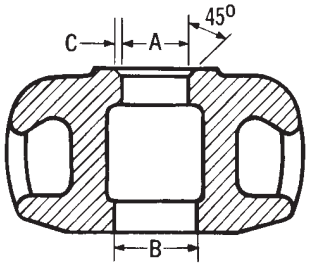

See drawing 15316-2

Elevator Specifications, requirements & sizes

NOV center latch elevators are constructed in two halves of practically the same weight for proper balance and easier opening and closing. Safety features include guarded operating handles to help prevent accidents to operators and an extra handle at the rear of the elevator for faster, safer operation. All elevators are equipped with a latch and latch lock combination. **In some cases, an addition "latched-and-locked verification pin" must be installed prior to lifting loads.**

NOV side door elevators consist of a stationary body and a door which can be opened to allow the pipe to be handled. All elevators have a latch lock mounted on the door. The construction protects the latch from accidental opening. Both latch and latch lock operate from a single handle. NOV elevators are made of high-quality steel castings or forgings which are fully heat treated.

Slip type elevators MYC, YC & HYC series

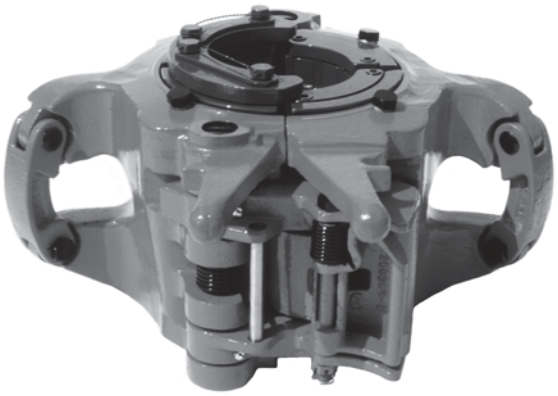

HYC Casing Elevator

The HYC elevator is a powerful 200 sTon (181 Tonne) capacity elevator and can handle from 2.7/8" to 7.5/8" tubing or casing. The full range can be achieved with the use of 5 sets of slips for the complete range. All slips provide a full 10.1/2" (7.5/8" slip has a height of 8.625") of insert contact to firmly grip your casing or tubing. The HYC elevator as with all Type 'Y' series elevators operate with the latch lock combination for safety.

Size range and capacity:

2.7/8" through 7.5/8" (73-194 mm) OD. API load rating is 200 sTon (181 Tonne).

MYC Casing Elevator

With its 125 sTon (114 Tonne) capacity the MYC elevator completes the range of Y type elevators for handling either external upset or API collar type casing or tubing. The MYC elevator has a range of 3.1/2" to 7", utilizing the same slips as the YC elevator. All slips provide a full 7" of insert contact to firmly grip your casing or tubing. The MYC operates with a latch and a latch lock combination for safety.

Size range and capacity:

3.1/2" to 7" (89-178mm) OD. API load rating is 125 sTon (114 Tonne).

YC Casing Elevator

The YC elevator is an exceptionally versatile elevator that handles either external upset or API collartype casing simply by installing the proper size insert-type slips and slip-setting ring assembly. In addition, slips can be provided that enable the YC elevator to handle dual strings of tubing. To reduce the possibility of the elevator opening under load, a latch lock is provided in addition to the spring type-latch. The rugged, long-lasting slip inserts are easily changed when they become worn.

Size range and capacity: 3.1/2" (89 mm) through 7" (178 mm) casing.

API load rating: 75 sTon (68 Tonne)

Dimensions & weights

Type	Part number	Oracle number	Load rating	Size	Size	Max. Weight		Link size (min / max)			
			[sTon/ Tonne]	[inch]	[mm]	[lbs]	[kg]	[inch]	[mm]	[inch]	[mm]
YC	24140Y	10114487-008	75 / 68	3.1/2 - 7	89-178	445	206	2.1/4	57	2.3/4	70
MYC	200360Y	10137340-003	125 / 113	3.1/2 - 7	89-178	750	336	2.1/4	57	2.3/4	70
HYC	BJ55310Y	10069471-001	200 / 181	2.7/8 - 7.5/8	73-194	997	452	2.1/4	57	3.1/2	89

HYC, MYC & YC Slip & inserts

Size [inch]	Slip assembly part number	Slip assemby Oracle number	Slip setting ring part number	Slip setting ring Oracle number	Insert part number	Insert Oracle number	No. req.	Weight Slip Ass'y	
								[lbs]	[kg]
3.1/2	201353Y	10137576-001	55516	10145392-001	16441	10137006-001	24	282	128
3.1/2 x 2.7/8	201355Y	10137580-001	201357	10137582-001	201356	10137581-001	24	282	128
4.1/2 x 3.1/2	55509Y	10114192-001	55516	10145392-001	24779	10138689-001	24	275	125
4.1/2 x 4	55510Y	10115265-001	55517	10145394-001	24781	10138690-001	24	270	123
4.1/2	55511Y	10035082-001	55518	10145396-001	BJ16408	10069471-001	24	268	122
5.1/2 x 4.1/2	55513Y1	10069471-004	55518	10145396-001	24785	10138692-001	36	268	122
5.1/2 x 5	55512Y	10035084-001	55520	10145400-001	24783	10138691-001	36	251	114
5.1/2	55513Y	10035087-001	55520	10145400-001	BJ16407	10148037-001	36	238	108
7 x 5.3/4	55515Y2	10069471-021	55520-1	10185737-001	29254	Contact NOV	48	238	108
7 x 6	55515Y1	10069471-022	55520-1	10185737-001	24785	10138692-001	48	234	106
7 x 6.5/8	55514Y	10069471-005	55521	10145402-001	24748	10138684-001	48	234	106
7	55515Y	10069471-006	55522	10145404-001	BJ16407	10148037-001	48	229	104
7.5/8 x 6.5/8	70009Y2	Contact NOV	200217	Contact NOV	25474-1	Contact NOV	48	229	104
7.5/8 x 7	70009Y1	10069471-018	200440	10137372-001	26750-1	10138861-002	48	229	104
7.5/8 x 7.1/4	70009Y5	10069471-020	200440-1	Contact NOV	39287-1	Contact NOV	48	230	105
7.5/8	70009Y	10069471-008	70012	10146322-001	70010	10146319-001	48	230	105
7.3/4	70009Y4	10069471-010	201546	10137628-001	32477-1	10139473-001	48	230	105

MYC & YC									
Size [inch]	Slip assembly part number	Slip assemby Oracle number	Slip setting ring part number	Slip setting ring Oracle number	Insert part number	Insert Oracle number	No. req.	Weight	
								[lbs]	[kg]
4.1/2 x 3.1/2	34931Y	10114487-012	34932	10139735-001	24779	10138689-001	16	130	59
4.1/2 x 4	26830Y	10138877-001	30209	10139177-001	24781	10138690-001	16	120	54
4.1/2	24072Y5	10114487-003	30219	10139185-001	BJ16408	10069471-001	16	116	53
5.1/2 x 5	24072Y7	10138642-001	30220	10139188-001	24783	10138691-001	16	112	51
5.1/2	24072Y2	10114487-002	30223	10139192-001	BJ16407	10148037-001	16	101	46
7 x 6.5/8	24077Y7	10138642-001	30226	10139196-001	24748	10138684-001	24	97	44
7	24077Y1	10114487-001	30229	10139199-001	BJ16407	10148037-001	24	95	43

* Requires special trigger part number 203333 / Oracle number 10138463-001

HYC, MYC & YC Guide plates

HYC	Bottom guide plate set part number	Bottom guide plate set Oracle number	Weight Guide plate	
Size [inch]			[lbs]	[kg]
3.1/2	26827-1	10114186-001	18	8
3.1/2 x 2.7/8	201358	10137584-001	18	8
4.1/2 x 3.1/2	26827-1	10114186-001	15	7
4.1/2 x 4	26827	10115244-001	15	7
4.1/2	24071-4	10114185-001	5	2
5.1/2 x 4.1/2	24071-4	10114185-001	5	2
5.1/2 x 5	24071	10138627-001	14	6
5.1/2	24071-1	10114184-001	13	6
7 x 5.3/4	24071-7	Contact NOV	13	6
7 x 6	24071-5	10138627-004	10	5
7 x 6.5/8	24071-3	10138627-003	10	5
7	24071-2	10138627-002	8	4
7.5/8 x 6.5/8	24071-3	10138627-003	10	5
7.5/8 x 7	24071-2	10138627-002	8	4
7.5/8 x 7.1/4	24071-9	10138627-001	7	3
7.5/8	24071-6	10138627-005	7	3
7.3/4	24071-8	10138627-006	7	3

MYC & YC	Bottom guide plate set part number	Bottom guide plate set Oracle number	Weight Guide plate	
Size [inch]			[lbs]	[kg]
4.1/2 x 3.1/2	26827-1	10114186-001	15	7
4.1/2 x 4	26827	10115244-001	15	7
4.1/2	24071-4	10114185-001	5	2
5.1/2 x 5	24071	10138627-001	14	6
5.1/2	24071-1	10114184-001	13	6
7 x 6.5/8	24071-3	10138627-003	10	5
7	24071-2	10138627-002	8	4

Slip Type Elevators YT, MYT & HYT Series

YT Slip Tubing Elevator

The YT elevator is an outstanding combination tool for use with any of the power tubing spiders. It has four slips each contacting 9" (228.6 mm) of pipe length. The interlocking slips form a circle around the tubing, assuring an uniform grip. Slip inserts are easily replaceable. Only one set of slip bodies is required to handle all tubing sizes from 1.315" (33 mm) through 3.1/2" (89 mm). A sturdy latch and safety latch lock combination holds the YT elevator securely in closed position.

HYT Tubing Elevator

The HYT elevator is designed to accommodate the widest possible range of tubing. The key is the various combinations possible with three different slip-setting rings, reducing inserts and two sizes of slips. The HYT elevator handles 2.3/8", 2.7/8" or 3.1/2" (60, 70 or 89 mm) OD tubing, with any type of upset and any wall thickness. The slip provides a full 12" (305 mm) of vertical contact on the pipe.

MYT Slip Tubing Elevator

The MYT elevator is a light-weight elevator for medium wells. It handles all tubing within its range with one set of slips, plus reducing inserts. The MYT elevator has four curved slips that form a circle around the tubing. This assures an uniform grip with minimum marking of pipe.

Dimensions & weights

Type	Part number	New Number	Load Rating	Size		Max. Weight		Link Size Min/Max			
			[sTon/ Tonne]	[inch]	[mm]	[lbs]	[kg]	[inch]	[mm]	[inch]	[mm]
YT	50006582Y	10114199-001	75 / 68	1.315 - 3.1/2	33-89	355	161	2.1/4	57	2.3/4	70
HYT	39284Y	10114189-001	150 / 136	2.3/8 - 3.1/2	60-89	740	336	2.1/4	57	3.1/2	89
MYT	29328Y	10139059-001	40 / 36	1.315 - 2.7/8	33-73	148	67	1.1/4	32	2.3/4	70

Slip assemblies

Nominal x Pipe Size [inch]	Slip assembly part number	Slip assembly Oracle number	Slip setting ring part number	Slip setting ring Oracle number	Insert part number	Insert Oracle number	No. required
YT							
2.7/8	23108Y4	10114180-001	27695	10138962-001	24773	10138686-001	12
2.7/8 x 2.3/8	23108Y6	10114182-001	27694	10138960-001	29255	10139053-001	12
2.7/8 x 2.1/16	23108Y7	11383835-001	27812	10138968-001	29256	10139054-001	12
2.7/8 x 2	23108Y8	11383842-001	28821	10139051-001	29256	10139054-001	12
2.7/8 x 1.900	23108Y9	10177440-001	27811	10177445-001	29257	10377901-001	12
2.7/8 x 1.600	23108Y10	11363576-001	27810	10138966-001	29258	10139056-001	12
2.7/8 x 1.315	23108Y11	10138600-001	29001	10139052-001	29259	10139057-001	12
3.1/2	23108Y5	10114181-001	27813	10138969-001	24774	10138687-001	24
3.1/2 x 2.7/8	23108Y3	10138600-002	27695	10138962-001	30358	10139203-001	24
HYT							
2.7/8	39259Y2	10114181-001	39214-2	10140009-001	-	11381052-001	16
2.7/8 x 2.3/8	39259Y4	10114188-001	39214-1	10140007-001	6476864	11479117-001	12
3.1/2	39258Y2	10140026-001	39214-3	10140011-001	24774	10138687-001	32
3.1/2 x 2.7/8	39258Y4	10140028-001	39214-2	10140009-001	30358	10139203-001	32
MYT							
2.1/16	29343Y3	10139059-005	29350	10139084-001	29256	10139054-001	8
2.1/16 x 2	29343Y4	Contact NOV	29351	10139086-001	29256	10139054-001	8
2.1/16 x 1.900	29343Y5	10139059-006	29352	10139087-001	29257	10377901-001	8
2.1/16 x 1.660	29343Y6	10139059-007	29353	10139089-001	29258	10139056-001	8
2.1/16 x 1.315	29343Y7	Contact NOV	29354	10139091-001	29259	10139057-001	8
2.7/8	29343Y1	10139059-003	29348	10139081-001	24773	10138686-001	8
2.7/8 x 2.3/8	29343Y2	10139059-004	29345	10139078-001	29255	10139053-001	8

NOTE: MYT series have no bottom guide

Collar Type Elevators A Series

Center-latch elevators are for handling collar-type drill pipe, casing and tubing. All “A" type elevators are constructed in two halves of practically the same weight, providing proper balance and easier opening and closing. In open position, the elevator hangs ready for closing at any point below the upset of the pipe. All “A" type elevators feature latch and safety latch lock combinations. Safety features include operating handles to help prevent accidents to operators and an extra handle at the rear of the elevator for safer operation.

Technical specifications A SERIES

Type	Part number	Oracle number	Size	Size	Load Rating	Max. Weight		Link Min	Link Min	Link Max	Link Max
			[inch]	[mm]	[sTon/ Tonne]	[lbs]	[kg]	[inch]	[mm]	[inch]	[mm]
TA	32387Y101	Contact NOV	2.7/8	73.1	35 / 32	57	26	1.1/4	32	1.3/4	44
TA	32387Y108	Contact NOV	2.7/8	73.1	35 / 32	57	26	1.1/4	32	1.3/4	44
TA	32387Y110	Contact NOV			35 / 32	57	26	1.1/4	32	1.3/4	44
TA	32387Y115	Contact NOV			35 / 32	57	26	1.1/4	32	1.3/4	44
TA	32387Y150	Contact NOV	1.050	26.7	35 / 32	57	26	1.1/4	32	1.3/4	44
TA	32387Y151	Contact NOV	1.050	26.7	35 / 32	57	26	1.1/4	32	1.3/4	44
TA	32387Y152	Contact NOV	1.31	27.9	35 / 32	57	26	1.1/4	32	1.3/4	44
TA	32387Y153	Contact NOV	1.31	27.9	35 / 32	57	26	1.1/4	32	1.3/4	44
TA	32387Y154	Contact NOV	1.66	42.2	35 / 32	57	26	1.1/4	32	1.3/4	44
TA	32387Y155	Contact NOV	1.66	42.2	35 / 32	57	26	1.1/4	32	1.3/4	44
TA	32387Y156	10139454-001	1.90	48.3	35 / 32	57	26	1.1/4	32	1.3/4	44
TA	32387Y157	Contact NOV	1.90	48.3	35 / 32	57	26	1.1/4	32	1.3/4	44
TA	32387Y158	Contact NOV	2.3/8	60.3	35 / 32	57	26	1.1/4	32	1.3/4	44
TA	32387Y159	10139454-002	2.3/8	60.3	35 / 32	57	26	1.1/4	32	1.3/4	44
TA	32387Y160	Contact NOV	2.7/8	73.1	35 / 32	57	26	1.1/4	32	1.3/4	44
TA	32387Y161	10139454-003	2.7/8	73.1	35 / 32	57	26	1.1/4	32	1.3/4	44
TA	32387Y915	Contact NOV			35 / 32	57	26	1.1/4	32	1.3/4	44
TMA	50006310Y101	10490428-001	2.7/8	73.1	100 / 91	121	55	1.3/4	44	2.3/4	70
TMA	50006310Y102	10490428-004	3.1/2	88.9	100 / 91	121	55	1.3/4	44	2.3/4	70
TMA	50006310Y103	10697511-001	3.1/2	88.9	100 / 91	121	55	1.3/4	44	2.3/4	70
TMA	50006310Y104	10697512-001	4	101.6	100 / 91	121	55	1.3/4	44	2.3/4	70
TMA	50006310Y105	10697513-001	4.1/2	114.3	100 / 91	121	55	1.3/4	44	2.3/4	70
TMA	50006310Y108	10697514-001	2.7/8	73.1	100 / 91	121	55	1.3/4	44	2.3/4	70
TMA	50006310Y109	10697515-001	2.3/8	60.3	100 / 91	121	55	1.3/4	44	2.3/4	70
TMA	50006310Y110	10490428-007	2.3/8	60.3	100 / 91	121	55	1.3/4	44	2.3/4	70
TMA	50006310Y115	10697180-001	2.3/8	60.3	100 / 91	121	55	1.3/4	44	2.3/4	70
TMA	50006310Y129	10091046-001	4.1/2	114.3	100 / 91	121	55	1.3/4	44	2.3/4	70
TMA	50006310Y158	10490428-013	2.3/8	60.3	100 / 91	121	55	1.3/4	44	2.3/4	70
TMA	50006310Y159	10490476-016	2.3/8	60.3	100 / 91	121	55	1.3/4	44	2.3/4	70
TMA	50006310Y160	10111418-001	2.7/8	73.1	100 / 91	121	55	1.3/4	44	2.3/4	70
TMA	50006310Y161	10490428-022	2.7/8	73.1	100 / 91	121	55	1.3/4	44	2.3/4	70
TMA	50006310Y162	10091048-001	3.1/2	88.9	100 / 91	121	55	1.3/4	44	2.3/4	70
TMA	50006310Y163	10490428-028	3.1/2	88.9	100 / 91	121	55	1.3/4	44	2.3/4	70

Technical specifications A SERIES

Type	Part number	Oracle number	Size	Size	Load Rating	Max. Weight		Link Min	Link Min	Link Max	Link Max
TMA			**[inch]**	**[mm]**	**[sTon/ Tonne]**	**[lbs]**	**[kg]**	**[inch]**	**[mm]**	**[inch]**	**[mm]**
TMA	50006310Y164	10490428-031	4	101.6	100 / 91	121	55	1.3/4	44	2.3/4	70
TMA	50006310Y165	10490428-034	4	101.6	100 / 91	121	55	1.3/4	44	2.3/4	70
TMA	50006310Y167	10490428-037	4.1/2	114.3	100 / 91	121	55	1.3/4	44	2.3/4	70
TMA	50006310Y177	10697532-001	4.1/8	101.7	100 / 91	121	55	1.3/4	44	2.3/4	70
TMA	50006310Y206	10490428-040	3.1/8	76.3	100 / 91	121	55	1.3/4	44	2.3/4	70
TMA	50006310Y209	10697534-001	3.1/2	88.9	100 / 91	121	55	1.3/4	44	2.3/4	70
TMA	50006310Y211	10490428-043	3.3/4	95.25	100 / 91	121	55	1.3/4	44	2.3/4	70
TMA	50006310Y213	10490428-046	4	101.6	100 / 91	121	55	1.3/4	44	2.3/4	70
TMA	50006310Y435	10490428-049	4.3/4	120.7	100 / 91	121	55	1.3/4	44	2.3/4	70
TMA	50006310Y437	10697539-001	3.5/16	84.1	100 / 91	121	55	1.3/4	44	2.3/4	70
TMA	50006310Y466	Contact NOV			100 / 91	121	55	1.3/4	44	2.3/4	70
TMA	50006310Y519	10697540-001	4.1/8	101.7	100 / 91	121	55	1.3/4	44	2.3/4	70
TMA	50006310Y548	10697541-001	4.1/4	108	100 / 91	121	55	1.3/4	44	2.3/4	70
TMA	50006310Y625	10697542-001	3.1/2	88.9	100 / 91	121	55	1.3/4	44	2.3/4	70
TMA	50006310Y674	Contact NOV	4.1/4	108	100 / 91	121	55	1.3/4	44	2.3/4	70
TMA	50006310Y685	10697547-001	3	76.2	100 / 91	121	55	1.3/4	44	2.3/4	70
TMA	50006310Y735	Contact NOV	3.1/8	76.3	100 / 91	121	55	1.3/4	44	2.3/4	70
TMA	50006310Y748	10697544-001	3.1/4	82.6	100 / 91	121	55	1.3/4	44	2.3/4	70
RGA											
RGA	201360Y101	10193652-001	2.7/8	73.1	200 / 181	304	138	1.3/4	44	2.3/4	70
RGA	201360Y103	Contact NOV	3.1/2	88.9	200 / 181	304	138	1.3/4	44	2.3/4	70
RGA	201360Y109	10137589-001	2.3/8	60.3	200 / 181	304	138	1.3/4	44	2.3/4	70
RGA	201360Y111	10177408-001	2.7/8	73.1	200 / 181	304	138	1.3/4	44	2.3/4	70
RGA	201360Y115	Contact NOV	2.3/8	60.3	200 / 181	304	138	1.3/4	44	2.3/4	70
RGA	201360Y129	10137590-001	4.1/2	114.3	200 / 181	304	138	1.3/4	44	2.3/4	70
RGA	201360Y130	Contact NOV	4.3/4	120.7	200 / 181	304	138	1.3/4	44	2.3/4	70
RGA	201360Y158	10137591-001	2.3/8	60.3	200 / 181	304	138	1.3/4	44	2.3/4	70
RGA	201360Y159	Contact NOV	2.3/8	60.3	200 / 181	304	138	1.3/4	44	2.3/4	70
RGA	201360Y160	10137592-001	2.7/8	73.1	200 / 181	304	138	1.3/4	44	2.3/4	70
RGA	201360Y161	10862406-001	2.7/8	73.1	200 / 181	304	138	1.3/4	44	2.3/4	70
RGA	201360Y162	10670333-001	3.1/2	88.9	200 / 181	304	138	1.3/4	44	2.3/4	70
RGA	201360Y163	Contact NOV	3.1/2	88.9	200 / 181	304	138	1.3/4	44	2.3/4	70
RGA	201360Y164	10670334-001	4	101.6	200 / 181	304	138	1.3/4	44	2.3/4	70
RGA	201360Y167	Contact NOV	4.1/2	114.3	200 / 181	304	138	1.3/4	44	2.3/4	70
RGA	201360Y206	10137590-002	3.1/8	76.3	200 / 181	304	138	1.3/4	44	2.3/4	70
RGA	201360Y207	Contact NOV	3.1/4	82.6	200 / 181	304	138	1.3/4	44	2.3/4	70
RGA	201360Y209	Contact NOV	3.1/2	88.9	200 / 181	304	138	1.3/4	44	2.3/4	70

Type	Part number	Oracle number	Size	Size	Load Rating	Max. Weight		Link Size Min	Min	Max	Max
GA			**[inch]**	**[mm]**	**[sTon/ Tonne]**	**[lbs]**	**[kg]**	**[inch]**	**[mm]**	**[inch]**	**[mm]**
GA	200034Y103	10153691-045	3.1/5	81.3	350 / 318	546	248	2.1/4	57	3.1/2	89
GA	200034Y105	10153691-046	4	101.6	350 / 318	546	248	2.1/4	57	3.1/2	89
GA	200034Y106	10153691-103	4.1/2	114.3	350 / 318	546	248	2.1/4	57	3.1/2	89
GA	200034Y107	10153691-104	5.1/2	139.7	350 / 318	546	248	2.1/4	57	3.1/2	89
GA	200034Y129	10153691-002	4.1/2	114.3	350 / 318	546	248	2.1/4	57	3.1/2	89
GA	200034Y130	Contact NOV	4.3/4	120.7	350 / 318	546	248	2.1/4	57	3.1/2	89
GA	200034Y131	Contact NOV	5	127	350 / 318	546	248	2.1/4	57	3.1/2	89
GA	200034Y132	10153691-105	5.5	139.7	350 / 318	546	248	2.1/4	57	3.1/2	89
GA	200034Y135	10153691-052	6.5/8	168.3	350 / 318	546	248	2.1/4	57	3.1/2	89
GA	200034Y136	10153691-106	7	177.8	350 / 318	546	248	2.1/4	57	3.1/2	89
GA	200034Y163	Contact NOV	3.5	88.9	350 / 318	546	248	2.1/4	57	3.1/2	89
GA	200034Y167	Contact NOV	4.5	114.3	350 / 318	546	248	2.1/4	57	3.1/2	89
GA	200034Y179	Contact NOV	5.1/4	133.4	350 / 318	546	248	2.1/4	57	3.1/2	89
GA	200034Y354	Contact NOV	4.3/4	120.7	350 / 318	546	248	2.1/4	57	3.1/2	89
GA	200034Y372	Contact NOV	7	177.8	350 / 318	546	248	2.1/4	57	3.1/2	89
GA	200034Y373	Contact NOV	6.1/2	165.1	350 / 318	546	248	2.1/4	57	3.1/2	89
GA	200034Y742	Contact NOV	6.1/2	165.1	350 / 318	546	248	2.1/4	57	3.1/2	89
GGA											
GGA	201385Y137	10153853-036	7.5/8	193.7	350 / 318	672	305	2.1/4	57	3.1/2	89
GGA	201385Y931	10153853-002	7.3/8	187.3	350 / 318	672	305	2.1/4	57	3.1/2	89
TA											
TA	200000Y131	10111254-005	5	127	100 / 91	260	118	1.3/4	44	2.3/4	70
TA	200000Y132	10111254-007	5.1/2	139.7	100 / 91	260	118	1.3/4	44	2.3/4	70
TA	200000Y136	10111254-009	7	177.8	100 / 91	260	118	1.3/4	44	2.3/4	70
TA	200000Y139	10111254-012	8.5/8	219.8	100 / 91	260	118	1.3/4	44	2.3/4	70
TA	200000Y334	10111254-013	8	203.2	100 / 91	260	118	1.3/4	44	2.3/4	70
TA	200000Y336	10111254-014	8	203.2	100 / 91	260	118	1.3/4	44	2.3/4	70
TA	200000Y337	10111254-015	6.1/4	158.8	100 / 91	260	118	1.3/4	44	2.3/4	70
TA	200000Y348	10111254-016	6.1/4	158.8	100 / 91	260	118	1.3/4	44	2.3/4	70
TA	200000Y349	10111254-017	Contact NOV		100 / 91	260	118	1.3/4	44	2.3/4	70
TA	200000Y354	10111254-018	4.3/4	120.7	100 / 91	260	118	1.3/4	44	2.3/4	70
TA	200000Y373	10111254-020	6.1/2	165.1	100 / 91	260	118	1.3/4	44	2.3/4	70
TA	200000Y387	10111254-001	6.3/4	171.9	100 / 91	260	118	1.3/4	44	2.3/4	70
TA	200000Y422	10111254-021	8.1/4	209.6	100 / 91	260	118	1.3/4	44	2.3/4	70
TA	200000Y435	10111254-022	4.3/4	120.7	100 / 91	260	118	1.3/4	44	2.3/4	70
TA	32754Y105	10180343-004	4	101.6	150 / 136	370	168	1.3/4	44	3.1/2	89
TA	32754Y106	10180343-028	4.1/2	114.3	150 / 136	370	168	1.3/4	44	3.1/2	89
TA	32754Y129	10180343-005	4.1/2	114.3	150 / 136	370	168	1.3/4	44	3.1/2	89
TA	32754Y130	10180343-029	4.3/4	120.7	150 / 136	370	168	1.3/4	44	3.1/2	89
TA	32754Y131	10180343-006	5	127	150 / 136	370	168	1.3/4	44	3.1/2	89
TA	32754Y132	10180343-007	5.1/2	139.7	150 / 136	370	168	1.3/4	44	3.1/2	89
TA	32754Y133	10180343-008	5.3/4	146.1	150 / 136	370	168	1.3/4	44	3.1/2	89
TA	32754Y134	10180343-030	6	152.4	150 / 136	370	168	1.3/4	44	3.1/2	89
TA	32754Y135	10180343-009	6.5/8	168.3	150 / 136	370	168	1.3/4	44	3.1/2	89
TA	32754Y136	10180343-010	7	177.8	150 / 136	370	168	1.3/4	44	3.1/2	89
TA	32754Y137	10180343-023	7.5/8	193.7	150 / 136	370	168	1.3/4	44	3.1/2	89
TA	32754Y139	10161739-001	8.5/8	219.1	150 / 136	370	168	1.3/4	44	3.1/2	89

Type	Part number	Oracle number	Size	Size	Load Rating	Max. Weight		Link Size Min	Min	Max	Max
			[inch]	[mm]	[sTon/ Tonne]	[lbs]	[kg]	[inch]	[mm]	[inch]	[mm]
TA	32754Y167	10180343-011	4.1/2	114.3	150 / 136	370	168	1.3/4	44	3.1/2	89
TA	32754Y180	10180343-031	5.1/2	139.7	150 / 136	370	168	1.3/4	44	3.1/2	89
TA	32754Y181	10180343-032	5.3/4	146.1	150 / 136	370	168	1.3/4	44	3.1/2	89
TA	32754Y188	10180343-033	7.1/2	190.5	150 / 136	370	168	1.3/4	44	3.1/2	89
TA	32754Y219	Contact NOV	5.1/2	139.7	150 / 136	370	168	1.3/4	44	3.1/2	89
TA	32754Y222	10180343-034	5.3/4	146.1	150 / 136	370	168	1.3/4	44	3.1/2	89
TA	32754Y331	10180343-035	6.3/8	161.9	150 / 136	370	168	1.3/4	44	3.1/2	89
TA	32754Y334	10180343-013	8	203.2	150 / 136	370	168	1.3/4	44	3.1/2	89
TA	32754Y336	10111340-001	8	203.2	150 / 136	370	168	1.3/4	44	3.1/2	89
TA	32754Y337	10180343-015	6.1/4	158.8	150 / 136	370	168	1.3/4	44	3.1/2	89
TA	32754Y338	10180343-016	6.3/4	171.5	150 / 136	370	168	1.3/4	44	3.1/2	89
TA	32754Y339	10180343-036	7.3/4	196.9	150 / 136	370	168	1.3/4	44	3.1/2	89
TA	32754Y347	10180343-037	8.1/4	209.6	150 / 136	370	168	1.3/4	44	3.1/2	89
TA	32754Y348	10180343-038	6.1/4	158.8	150 / 136	370	168	1.3/4	44	3.1/2	89
TA	32754Y354	10180343-017	4.3/4	120.7	150 / 136	370	168	1.3/4	44	3.1/2	89
TA	32754Y357	10180343-039	7.1/4	184.2	150 / 136	370	168	1.3/4	44	3.1/2	89
TA	32754Y361	10180343-018	7	177.8	150 / 136	370	168	1.3/4	44	3.1/2	89
TA	32754Y362	10180343-040	6	152.4	150 / 136	370	168	1.3/4	44	3.1/2	89
TA	32754Y372	10180343-041	7	177.8	150 / 136	370	168	1.3/4	44	3.1/2	89
TA	32754Y373	10111341-001	6.1/2	165.1	150 / 136	370	168	1.3/4	44	3.1/2	89
TA	32754Y387	10180343-019	6.3/4	171.5	150 / 136	370	168	1.3/4	44	3.1/2	89
TA	32754Y411	10978748-001	5.1/2	139.7	150 / 136	370	168	1.3/4	44	3.1/2	89
TA	32754Y422	10180343-020	8.1/4	209.6	150 / 136	370	168	1.3/4	44	3.1/2	89
TA	32754Y426	10180343-024	8.1/2	215.9	150 / 136	370	168	1.3/4	44	3.1/2	89
TA	32754Y435	10111342-001	4.3/4	120.7	150 / 136	370	168	1.3/4	44	3.1/2	89
TA	32754Y552	10180343-042	5	127	150 / 136	370	168	1.3/4	44	3.1/2	89
TA	32754Y580	10180343-021	8.1/2	215.9	150 / 136	370	168	1.3/4	44	3.1/2	89
TA	32754Y667	10180343-043	6.5/8	168.3	150 / 136	370	168	1.3/4	44	3.1/2	89
TA	32754Y920	10180343-022	6.3/4	171.5	150 / 136	370	168	1.3/4	44	3.1/2	89
TA	39342Y140	Contact NOV	9	228.6	150 / 136	524	238	1.3/4	44	3.1/2	89
TA	39342Y141	10111364-005	9.5/8	244.5	150 / 136	524	238	1.3/4	44	3.1/2	89
TA	39342Y142	10925629-001	10.3/4	273.1	150 / 136	524	238	1.3/4	44	3.1/2	89
TA	39342Y195	10111364-006	10	254	150 / 136	524	238	1.3/4	44	3.1/2	89
TA	39342Y196	Contact NOV	11.1/4	285.8	150 / 136	524	238	1.3/4	44	3.1/2	89
TA	39342Y226	Contact NOV	8.3/4	222.3	150 / 136	524	238	1.3/4	44	3.1/2	89
TA	39342Y230	Contact NOV	11	279.4	150 / 136	524	238	1.3/4	44	3.1/2	89
TA	39342Y346	10111364-007	9.1/2	241.3	150 / 136	524	238	1.3/4	44	3.1/2	89
TA	39342Y356	10111364-010	9	228.6	150 / 136	524	238	1.3/4	44	3.1/2	89
TA	39342Y367	10111364-008	9.3/4	247.7	150 / 136	524	238	1.3/4	44	3.1/2	89
TA	39342Y370	10111364-001	9.1/2	214.3	150 / 136	524	238	1.3/4	44	3.1/2	89
TA	39342Y419	Contact NOV	11	279.4	150 / 136	524	238	1.3/4	44	3.1/2	89
TA	39342Y427	Contact NOV	9	228.6	150 / 136	524	238	1.3/4	44	3.1/2	89

18° Type Elevators G Series

G series elevators are constructed in two halves of practically the same weight for better balance, making them easier to handle; easier to latch on and take off the pipe. In open position, a G series elevator hangs ready for closing at any point below the upset of the pipe. Safety features include guarded operating handles to help prevent accidents to operators and an extra handle at the rear of the elevator for easier, safer operation.

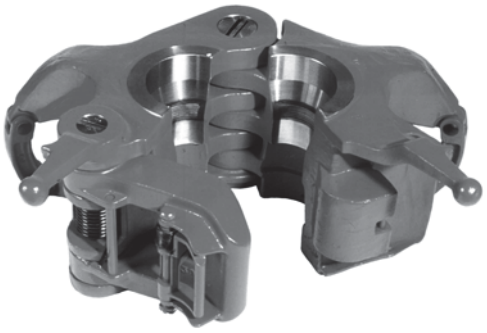

Technical specifications G SERIES

Type	Part number	Oracle number	Size	Size	Load Rating	Max. Weight		Link Size Min	Min	Max	Max
MG			**[inch]**	**[mm]**	**[sTon/ Tonne]**	**[lbs]**	**[kg]**	**[inch]**	**[mm]**	**[inch]**	**[mm]**
MG	30157Y116	10114187-001	2.3/8	60.3	100 / 91	233	106	1.3/4	44	2.3/4	70
MG	30157Y117	10114187-016	2.7/8	73.1	100 / 91	233	106	1.3/4	44	2.3/4	70
MG	30157Y118	10114187-005	2.7/8	73.1	100 / 91	233	106	1.3/4	44	2.3/4	70
MG	30157Y119	10114187-014	3.1/2	88.9	100 / 91	233	106	1.3/4	44	2.3/4	70
MG	30157Y120	10114187-009	3.1/2	88.9	100 / 91	233	106	1.3/4	44	2.3/4	70
MG	30157Y121	10114187-015	4	101.6	100 / 91	233	106	1.3/4	44	2.3/4	70
MG	30157Y122	10114187-012	4.1/2	114.3	100 / 91	233	106	1.3/4	44	2.3/4	70
MG	30157Y123	10114187-011	4.1/2	114.3	100 / 91	233	106	1.3/4	44	2.3/4	70
MG	30157Y773	Contact NOV	2.7/8	73.1	100 / 91	233	106	1.3/4	44	2.3/4	70
MG	30157Y816	Contact NOV	2.7/8	73.1	100 / 91	233	106	1.3/4	44	2.3/4	70
RGG											
RGG	200680Y116	10022994-001	2.3/8	60.3	150 / 136	304	138	1.3/4	44	2.3/4	70
RGG	200680Y117	10137456-005	2.7/8	73.1	150 / 136	304	138	1.3/4	44	2.3/4	70
RGG	200680Y118	10111282-001	2.7/8	73.1	150 / 136	304	138	1.3/4	44	2.3/4	70
RGG	200680Y119	10137456-009	3.1/2	88.9	150 / 136	304	138	1.3/4	44	2.3/4	70
RGG	200680Y120	10137456-010	3.1/2	88.9	150 / 136	304	138	1.3/4	44	2.3/4	70
MGG											
MGG	35005Y119	10153691-058	3.1/2	88.9	250 / 227	608	276	2.1/4	57	3.1/2	89
MGG	35005Y120	10033192-001	3.1/2	88.9	250 / 227	608	276	2.1/4	57	3.1/2	89
MGG	35005Y121	10153691-067	4	101.6	250 / 227	608	276	2.1/4	57	3.1/2	89
MGG	35005Y122	10153691-071	4	101.6	250 / 227	608	276	2.1/4	57	3.1/2	89
MGG	35005Y123	10381224-001	4.1/2	114.3	250 / 227	608	276	2.1/4	57	3.1/2	89
MGG	35005Y124	10153691-078	5.1/2	139.7	250 / 227	608	276	2.1/4	57	3.1/2	89
MGG	35005Y451	Contact NOV	Contact NOV		250 / 227	608	276	2.1/4	57	3.1/2	89
MGG	35005Y509	Contact NOV	5	127	250 / 227	608	276	2.1/4	57	3.1/2	89
MGG	35005Y525	Contact NOV	3.1/2	88.9	250 / 227	608	276	2.1/4	57	3.1/2	89
MGG	35005Y798	10153691-044	4	101.6	250 / 227	608	276	2.1/4	57	3.1/2	89

Type	Part number	Oracle number	Size	Size	Load Rating	Max. Weight		Link Size Min	Min	Max	Max
GG			**[inch]**	**[mm]**	**[sTon/ Tonne]**	**[lbs]**	**[kg]**	**[inch]**	**[mm]**	**[inch]**	**[mm]**
GG	31068Y120	Contact NOV	3.1/2	88.9	350 / 318	693	314	2.1/4	57	3.1/2	89
GG	31068Y121	10153853-010	4	101.6	350 / 318	693	314	2.1/4	57	3.1/2	89
GG	31068Y122	10153853-015	4	101.6	350 / 318	693	314	2.1/4	57	3.1/2	89
GG	31068Y123	10111324-001	4.1/2	114.3	350 / 318	693	314	2.1/4	57	3.1/2	89
GG	31068Y124	10153853-021	5.1/2	139.7	350 / 318	693	314	2.1/4	57	3.1/2	89
GG	31068Y756	10153853-025	5	127	350 / 318	693	314	2.1/4	57	3.1/2	89
HGG											
HGG	70013Y106	10146330-003	4.1/2	114.3	500 / 454	1,029	467	2.1/4	57	3.1/2	89
HGG	70013Y121	10146327-001	4	101.6	500 / 454	1,029	467	2.1/4	57	3.1/2	89
HGG	70013Y122	10146328-001	4	101.6	500 / 454	1,029	467	2.1/4	57	3.1/2	89
HGG	70013Y123	10146329-001	4.1/2	114.3	500 / 454	1,029	467	2.1/4	57	3.1/2	89
HGG	70013Y124	10146330-001	5.1/2	139.7	500 / 454	1,029	467	2.1/4	57	3.1/2	89
HGG	70013Y136	10146330-004	7	177.8	500 / 454	1,029	467	2.1/4	57	3.1/2	89
HGG	70013Y655	Contact NOV	6.5/8	168.3	500 / 454	1,029	467	2.1/4	57	3.1/2	89
HGG	70013Y678	10146330-005	Contact NOV		500 / 454	1,029	467	2.1/4	57	3.1/2	89
HGG	70013Y740	10490429-001	6.5/8	168.3	500 / 454	1,029	467	2.1/4	57	3.1/2	89
HGG	70013Y756	10146330-007	5	127	500 / 454	1,029	467	2.1/4	57	3.1/2	89
HGG	70013Y770	10146330-008	5.1/2	139.7	500 / 454	1,029	467	2.1/4	57	3.1/2	89
HGG	70013Y774	10146330-009	Contact NOV		500 / 454	1,029	467	2.1/4	57	3.1/2	89
HGG	70013Y789	10490429-002	6	152.4	500 / 454	1,029	467	2.1/4	57	3.1/2	89

Technical specifications G SERIES WITH WEAR BUSHING

Type	Part number	Oracle number	Size	Size	Load Rating	Max. Weight		Link Size Min	Min	Max	Max
MGG			**[inch]**	**[mm]**	**[sTon/ Tonne]**	**[lbs]**	**[kg]**	**[inch]**	**[mm]**	**[inch]**	**[mm]**
MGG	200058Y119	10359122-005	3.1/2	88.9	250 / 227	585	266	2.1/4	57	3.1/2	89
MGG	200058Y120	10359122-009	3.1/2	88.9	250 / 227	585	266	2.1/4	57	3.1/2	89
MGG	200058Y121	10359122-035	4	101.6	250 / 227	585	266	2.1/4	57	3.1/2	89
MGG	200058Y122	10359122-016	4	101.6	250 / 227	585	266	2.1/4	57	3.1/2	89
MGG	200058Y123	10359122-001	4.1/2	114.3	250 / 227	585	266	2.1/4	57	3.1/2	89
MGG	200058Y124	10359122-036	5.1/2	139.7	250 / 227	585	266	2.1/4	57	3.1/2	89
MGG	200058Y798	10359122-037	4	101.6	250 / 227	585	266	2.1/4	57	3.1/2	89
GG											
GG	200056Y120	Contact NOV	3.1/2	88.9	350 / 318	680	310	2.1/4	57	3.1/2	89
GG	200056Y121	10021851-005	4	101.6	350 / 318	680	310	2.1/4	57	3.1/2	89
GG	200056Y122	10021851-009	4	101.6	350 / 318	680	310	2.1/4	57	3.1/2	89
GG	200056Y123	10021851-001	4.1/2	114.3	350 / 318	680	310	2.1/4	57	3.1/2	89
GG	200056Y124	10021851-019	5.1/2	139.7	350 / 318	680	310	2.1/4	57	3.1/2	89
GG	200056Y756	10021851-023	5	127	350 / 318	680	310	2.1/4	57	3.1/2	89
GG	200056Y805	10021851-014	4.1/5	114.3	350 / 318	680	310	2.1/4	57	3.1/2	89
HGG											
HGG	200060Y121	10137268-004	4	101.6	500 / 454	1,010	459	2.1/4	57	3.1/2	89
HGG	200060Y122	10137268-005	4.1/2	114.3	500 / 454	1,010	459	2.1/4	57	3.1/2	89
HGG	200060Y123	10111257-001	4.1/2	114.3	500 / 454	1,010	459	2.1/4	57	3.1/2	89
HGG	200060Y124	10022107-001	5.1/2	139.7	500 / 454	1,010	459	2.1/4	57	3.1/2	89
HGG	200062Y655	Contact NOV	6.5/8	168.3	500 / 454	1,010	459	2.1/4	57	3.1/2	89
HGG	200062Y678	10137279-003	5.1/2	139.7	500 / 454	1,010	459	2.1/4	57	3.1/2	89
HGG	200062Y740	10122145-001	6.5/8	168.3	500 / 454	1,010	459	2.1/4	57	3.1/2	89
HGG	200062Y770	10137279-006	6	152.4	500 / 454	1,010	459	2.1/4	57	3.1/2	89

Optional equipment part numbers

Part number	Oracle number	Description
15320	10019468-001	Balancing strap for center latch elevators 2.3/4" links and smaller
26905	10027972-001	Balancing strap for center latch elevators 3.1/2" links

X Series Side Door Elevators

The X-series elevators handle all sizes of collar-type tubing, drill pipe and casing.

The SMX has a patented latch & latch lock arrangement mounted on the elevator door. The handle protects the latch from accidental opening. Both latches operate from a single handle.

The SLX-elevators are offered alternatively to the SMX-elevators. They provide proven technology and economics.

The SX-elevator is a mid-sized elevator with higher rating compared to the SLX and SMX, while the SLX DD elevator provides for the largest sizes.

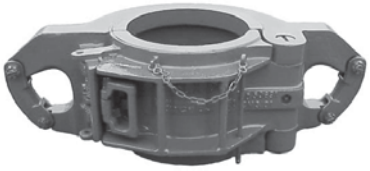

SLX-elevator

Technical specifications X SERIES

Part number	Oracle number	Load Rating	Size	Size	Max. Weight		Link size Min	Min	Max	Max
SLX		[sTon/ Tonne]	[inch]	[mm]	[lbs]	[kg]	[inch]	[mm]	[inch]	[mm]
33734Y101	Contact NOV	65 / 59	2.7/8	73.1	50	23	1.3/4	44	2.1/4	57
33734Y115	Contact NOV	65 / 59	2.3/8	60.3	50	23	1.3/4	44	2.1/4	57
33734Y154	Contact NOV	65 / 59	1.660	42.2	50	23	1.3/4	44	2.1/4	57
33734Y156	Contact NOV	65 / 59	1.900	48.3	50	23	1.3/4	44	2.1/4	57
33734Y157	10139639-001	65 / 59	1.900	48.3	50	23	1.3/4	44	2.1/4	57
33734Y158	Contact NOV	65 / 59	2.3/4	69.9	50	23	1.3/4	44	2.1/4	57
33734Y159	10139639-002	65 / 59	2.3/8	60.3	50	23	1.3/4	44	2.1/4	57
33734Y160	Contact NOV	65 / 59	2.7/8	73.1	50	23	1.3/4	44	2.1/4	57
33734Y161	Contact NOV	65 / 59	2.7/8	73.1	50	23	1.3/4	44	2.1/4	57
33734Y735	Contact NOV	65 / 59	3.1/8	79.4	50	23	1.3/4	44	2.1/4	57
33693Y101	10139618-009	100 / 90	2.7/8	73.1	77	35	1.3/4	44	2.3/4	70
33693Y108	Contact NOV	100 / 90	2.7/8	73.1	77	35	1.3/4	44	2.3/4	70
33693Y110	10139618-010	100 / 90	2.3/8	60.3	77	35	1.3/4	44	2.3/4	70
33693Y115	Contact NOV	100 / 90	2.3/8	60.3	77	35	1.3/4	44	2.3/4	70
33693Y158	10139618-002	100 / 90	2.3/8	60.3	77	35	1.3/4	44	2.3/4	70
33693Y159	10139618-003	100 / 90	2.3/8	60.3	77	35	1.3/4	44	2.3/4	70
33693Y160	10139618-004	100 / 90	2.7/8	73.1	77	35	1.3/4	44	2.3/4	70
33693Y161	10139618-005	100 / 90	2.7/8	73.1	77	35	1.3/4	44	2.3/4	70
33693Y206	10139618-006	100 / 90	3.1/8	79.4	77	35	1.3/4	44	2.3/4	70
33693Y625	Contact NOV	100 / 90	3.1/2	88.9	77	35	1.3/4	44	2.3/4	70
33809Y102	Contact NOV	100 / 90	3.1/2	88.9	114	58	1.3/4	44	2.3/4	70
33809Y103	Contact NOV	100 / 90	3.1/2	88.9	114	58	1.3/4	44	2.3/4	70
33809Y162	10143542-033	100 / 90	3.1/2	88.9	114	58	1.3/4	44	2.3/4	70
33809Y163	10143542-036	100 / 90	3.1/2	88.9	114	58	1.3/4	44	2.3/4	70

Part number	Oracle number	Load Rating	Size	Size	Max. Weight		Link size Min	Min	Max	Max
SLX		[sTon/ Tonne]	[inch]	[mm]	[lbs]	[kg]	[inch]	[mm]	[inch]	[mm]
33809Y164	10143542-038	100 / 90	4	101.6	114	58	1.3/4	44	2.3/4	70
33809Y165	Contact NOV	100 / 90	4.1/8	104.8	114	58	1.3/4	44	2.3/4	70
33809Y177	10139643-001	100 / 90	4.1/8	104.8	114	58	1.3/4	44	2.3/4	70
33809Y209	Contact NOV	100 / 90	3.1/2	88.9	114	58	1.3/4	44	2.3/4	70
33809Y211	10143542-075	100 / 90	3.3/4	95.3	114	58	1.3/4	44	2.3/4	70
33809Y519	Contact NOV	100 / 90	4.1/8	104.8	114	58	1.3/4	44	2.3/4	70
33809Y548	Contact NOV	100 / 90	4.1/4	108	114	58	1.3/4	44	2.3/4	70
33809Y582	Contact NOV	100 / 90	3.3/4	95.3	114	58	1.3/4	44	2.3/4	70
33809Y674	Contact NOV	100 / 90	4.1/4	108	114	58	1.3/4	44	2.3/4	70
33809Y795	10143542-056	100 / 90	3.3/8	85.7	114	58	1.3/4	44	2.3/4	70
33809Y862	10143542-088	100 / 90	3.3/4	95.3	114	58	1.3/4	44	2.3/4	70
33854Y105	Contact NOV	100 / 90	4	101.6	145	66	1.3/4	44	2.3/4	70
33854Y106	Contact NOV	100 / 90	4.1/2	100.8	145	66	1.3/4	44	2.3/4	70
33854Y107	Contact NOV	100 / 90	5.1/2	126.2	145	66	1.3/4	44	2.3/4	70
33854Y129	10161740-001	100 / 90	4.1/2	100.8	145	66	1.3/4	44	2.3/4	70
33854Y130	Contact NOV	100 / 90	4.3/4	120.7	145	66	1.3/4	44	2.3/4	70
33854Y131	10161740-018	100 / 90	5	127	145	66	1.3/4	44	2.3/4	70
33854Y132	10161740-008	100 / 90	5.1/2	139.7	145	66	1.3/4	44	2.3/4	70
33854Y133	Contact NOV	100 / 90	5.3/4	146.1	145	66	1.3/4	44	2.3/4	70
33854Y134	10143542-089	100 / 90	6	152.4	145	66	1.3/4	44	2.3/4	70
33854Y167	Contact NOV	100 / 90	4.1/2	100.8	145	66	1.3/4	44	2.3/4	70
33854Y179	Contact NOV	100 / 90	5.1/4	133.4	145	66	1.3/4	44	2.3/4	70
33854Y180	Contact NOV	100 / 90	5.1/2	139.7	145	66	1.3/4	44	2.3/4	70
33854Y181	Contact NOV	100 / 90	5.3/4	146.1	145	66	1.3/4	44	2.3/4	70
33854Y215	Contact NOV	100 / 90	4.1/2	100.8	145	66	1.3/4	44	2.3/4	70
33854Y219	Contact NOV	100 / 90	5.1/4	133.1	145	66	1.3/4	44	2.3/4	70
33854Y345	10143542-052	100 / 90	4.3/4	120.7	145	66	1.3/4	44	2.3/4	70
33854Y354	Contact NOV	100 / 90	4.3/4	120.7	145	66	1.3/4	44	2.3/4	70
33854Y411	Contact NOV	100 / 90	5.1/2	139.7	145	66	1.3/4	44	2.3/4	70
33854Y435	10161740-016	100 / 90	4.3/4	120.7	145	66	1.3/4	44	2.3/4	70
33854Y530	Contact NOV	100 / 90	5	127	145	66	1.3/4	44	2.3/4	70
33854Y552	Contact NOV	100 / 90	5	127	145	66	1.3/4	44	2.3/4	70
31239Y132	10139410-001	150 / 136	5.1/2	139.7	326	148	1.3/4	44	3.1/2	89
31239Y133	10143542-030	150 / 136	5.3/4	146.1	326	148	1.3/4	44	3.1/2	89
31239Y134	10143542-089	150 / 136	6	152.4	326	148	1.3/4	44	3.1/2	89
31239Y135	10139410-007	150 / 136	6.5/8	168.3	326	148	1.3/4	44	3.1/2	89
31239Y136	10139410-011	150 / 136	7	177.8	326	148	1.3/4	44	3.1/2	89
31239Y137	10139410-015	150 / 136	7.5/8	193.7	326	148	1.3/4	44	3.1/2	89
31239Y139	10139410-018	150 / 136	8.5/8	219.1	326	148	1.3/4	44	3.1/2	89
31239Y181	10143542-073	150 / 136	5.3/4	146.1	326	148	1.3/4	44	3.1/2	89
31239Y222	Contact NOV	150 / 136	5.3/4	146.1	326	148	1.3/4	44	3.1/2	89
31239Y331	Contact NOV	150 / 136	6.3/4	171.5	326	148	1.3/4	44	3.1/2	89
31239Y334	10034495-010	150 / 136	8	203.2	326	148	1.3/4	44	3.1/2	89
31239Y336	Contact NOV	150 / 136	8	203.2	326	148	1.3/4	44	3.1/2	89
31239Y337	10139410-026	150 / 136	6.1/4	158.8	326	148	1.3/4	44	3.1/2	89
31239Y338	Contact NOV	150 / 136	6.3/4	171.5	326	148	1.3/4	44	3.1/2	89
31239Y339	Contact NOV	150 / 136	7.3/4	196.9	326	148	1.3/4	44	3.1/2	89
31239Y347	Contact NOV	150 / 136	8.1/4	209.6	326	148	1.3/4	44	3.1/2	89
31239Y348	Contact NOV	150 / 136	6.1/4	158.8	326	148	1.3/4	44	3.1/2	89
31239Y355	Contact NOV	150 / 136	7.1/4	184.2	326	148	1.3/4	44	3.1/2	89
31239Y357	Contact NOV	150 / 136	7.1/4	184.2	326	148	1.3/4	44	3.1/2	89
31239Y361	Contact NOV	150 / 136	7	177.8	326	148	1.3/4	44	3.1/2	89
31239Y362	Contact NOV	150 / 136	7	177.8	326	148	1.3/4	44	3.1/2	89

Part number	Oracle number	Load Rating	Size	Size	Max. Weight		Link size Min	Min	Max	Max
SLX		[sTon/ Tonne]	[inch]	[mm]	[lbs]	[kg]	[inch]	[mm]	[inch]	[mm]
31239Y372	Contact NOV	150 / 136	7	177.8	326	148	1.3/4	44	3.1/2	89
31239Y373	Contact NOV	150 / 136	6.1/2	171.5	326	148	1.3/4	44	3.1/2	89
31239Y387	Contact NOV	150 / 136	6.3/4	171.5	326	148	1.3/4	44	3.1/2	89
31239Y409	Contact NOV	150 / 136	6.3/8	161.9	326	148	1.3/4	44	3.1/2	89
31239Y422	Contact NOV	150 / 136	8.1/4	209.6	326	148	1.3/4	44	3.1/2	89
31239Y426	10139410-040	150 / 136	8.1/2	215.9	326	148	1.3/4	44	3.1/2	89
31239Y427	Contact NOV	150 / 136	9	228.6	326	148	1.3/4	44	3.1/2	89
31239Y486	Contact NOV	150 / 136	6.1/2	165.1	326	148	1.3/4	44	3.1/2	89
31239Y550	Contact NOV	150 / 136	7.3/4	196.9	326	148	1.3/4	44	3.1/2	89
31239Y553	Contact NOV	150 / 136	8.3/4	222.3	326	148	1.3/4	44	3.1/2	89
31239Y580	10139410-018	150 / 136	8.5/8	219.1	326	148	1.3/4	44	3.1/2	89
31239Y620	Contact NOV	150 / 136	7.3/4	196.9	326	148	1.3/4	44	3.1/2	89
31239Y697	Contact NOV	150 / 136	8.1/8	206.4	326	148	1.3/4	44	3.1/2	89
31239Y705	Contact NOV	150 / 136	7.3/4	196.9	326	148	1.3/4	44	3.1/2	89
31239Y765	Contact NOV	150 / 136	6.1/2	165.1	326	148	1.3/4	44	3.1/2	89
31239Y804	Contact NOV	150 / 136	8.3/4	222.3	326	148	1.3/4	44	3.1/2	89
31239Y819	Contact NOV	150 / 136	7.931	201.5	326	148	1.3/4	44	3.1/2	89
31239Y841	Contact NOV	150 / 136	Contact NOV		326	148	1.3/4	44	3.1/2	89
31239Y842	Contact NOV	150 / 136	Contact NOV		326	148	1.3/4	44	3.1/2	89
31239Y843	Contact NOV	150 / 136	Contact NOV		326	148	1.3/4	44	3.1/2	89
31239Y844	Contact NOV	150 / 136	Contact NOV		326	148	1.3/4	44	3.1/2	89
33950Y140	Contact NOV	150 / 136	9	228.6	357	162	1.3/4	44	3.1/2	89
33950Y141	10139660-001	150 / 136	9.5/8	244.5	357	162	1.3/4	44	3.1/2	89
33950Y142	10139660-005	150 / 136	10.3/4	273.1	357	162	1.3/4	44	3.1/2	89
33950Y195	10143641-031	150 / 136	10	254	357	162	1.3/4	44	3.1/2	89
33950Y228	Contact NOV	150 / 136	10	254	357	162	1.3/4	44	3.1/2	89
33950Y346	10139660-014	150 / 136	9.1/2	241.3	357	162	1.3/4	44	3.1/2	89
33950Y356	Contact NOV	150 / 136	9	228.6	357	162	1.3/4	44	3.1/2	89
33950Y367	10143641-035	150 / 136	9.3/4	247.7	357	162	1.3/4	44	3.1/2	89
33950Y370	10143641-036	150 / 136	9.1/2	241.3	357	162	1.3/4	44	3.1/2	89
33950Y419	Contact NOV	150 / 136	11	279.4	357	162	1.3/4	44	3.1/2	89
33950Y427	Contact NOV	150 / 136	9	228.6	357	162	1.3/4	44	3.1/2	89
33950Y471	10143641-039	150 / 136	10	254	357	162	1.3/4	44	3.1/2	89
33950Y600	Contact NOV	150 / 136	9.5/8	244.5	357	162	1.3/4	44	3.1/2	89
33950Y649	10139660-011	150 / 136	9.3/4	247.7	357	162	1.3/4	44	3.1/2	89
33950Y704	Contact NOV	150 / 136	11	279.4	357	162	1.3/4	44	3.1/2	89
33950Y769	Contact NOV	150 / 136	9.3/4	247.7	357	162	1.3/4	44	3.1/2	89
33950Y808	10143641-049	150 / 136	10.1/4	260.4	357	162	1.3/4	44	3.1/2	89
33950Y831	10139660-013	150 / 136	9.5/8	244.5	357	162	1.3/4	44	3.1/2	89
33950Y840	Contact NOV	150 / 136	10.355	236.1	357	162	1.3/4	44	3.1/2	89
33950Y865	Contact NOV	150 / 136	9.3/8	238.2	357	162	1.3/4	44	3.1/2	89
33982Y143	10139672-001	150 / 136	11.3/4	298.5	448	203	1.3/4	44	3.1/2	89
33982Y144	10139672-005	150 / 136	13.3/8	339.7	448	203	1.3/4	44	3.1/2	89
33982Y345	Contact NOV	150 / 136	12.3/4	323.9	448	203	1.3/4	44	3.1/2	89

Part number	Oracle number	Load Rating	Size	Size	Max. Weight		Link size Min	Min	Max	Max
SLX		[sTon/ Tonne]	[inch]	[mm]	[lbs]	[kg]	[inch]	[mm]	[inch]	[mm]
33982Y596	10139672-009	150 / 136	13.5/8	346.1	448	203	1.3/4	44	3.1/2	89
33982Y616	10139672-016	150 / 136	13.1/2	342.9	448	203	1.3/4	44	3.1/2	89
33982Y676	Contact NOV	150 / 136	12.7/8		448	203	1.3/4	44	3.1/2	89
33982Y711	Contact NOV	150 / 136	12	304.8	448	203	1.3/4	44	3.1/2	89
33982Y729	10139672-013	150 / 136	11.7/8	300.4	448	203	1.3/4	44	3.1/2	89
33982Y809	Contact NOV	150 / 136	13	300.2	448	203	1.3/4	44	3.1/2	89
33982Y830	Contact NOV	150 / 136	12.3/4	323.9	448	203	1.3/4	44	3.1/2	89
33982Y839	Contact NOV	150 / 136	Contact NOV		448	203	1.3/4	44	3.1/2	89
34087Y145	10139693-001	150 / 136	16	406.4	537	244	1.3/4	44	3.1/2	89
34087Y664	Contact NOV	150 / 136	16.3/4	425.5	537	244	1.3/4	44	3.1/2	89
34087Y733	Contact NOV	150 / 136	Contact NOV		537	244	1.3/4	44	3.1/2	89
34087Y815	Contact NOV	150 / 136	Contact NOV		537	244	1.3/4	44	3.1/2	89
33632Y146	10139602-001	150 / 136	18.5/8	473.1	705	320	1.3/4	44	3.1/2	89
33632Y147	10139602-003	150 / 136	20	508	705	320	1.3/4	44	3.1/2	89
33632Y664	Contact NOV	150 / 136	16.3/4	425.5	705	320	1.3/4	44	3.1/2	89
33632Y669	Contact NOV	150 / 136	Contact NOV		705	320	1.3/4	44	3.1/2	89
33632Y723	Contact NOV	150 / 136	18	457,2	705	320	1.3/4	44	3.1/2	89
33632Y803	Contact NOV	150 / 136	18.3/16	462	705	320	1.3/4	44	3.1/2	89
33632Y829	10139602-006	150 / 136	17.197	436.8	705	320	1.3/4	44	3.1/2	89
33632Y859	10139602-007	150 / 136	17.7/8	454.1	705	320	1.3/4	44	3.1/2	89
34175Y148	Contact NOV	250 / 227	21.1/2	546.1	1,208	548	1.3/4	44	3.1/2	89
34175Y149	Contact NOV	250 / 227	24.1/2	622.3	1,208	548	1.3/4	44	3.1/2	89
34175Y630	Contact NOV	250 / 227	24	609.6	1,208	548	1.3/4	44	3.1/2	89
34175Y688	Contact NOV	250 / 227	22	558.8	1,208	548	1.3/4	44	3.1/2	89
34175Y876	Contact NOV	250 / 227	22.1/2	571.5	1,208	548	1.3/4	44	3.1/2	89

SMX series

The Manual Side Door Elevator (SMX) is a new economic alternative for the SX-type elevators. A new door design brings enhanced usability, safety and comfort for the operator. The elevator is suitable for handling collar type tubulars.

Part number	Oracle number	Load Rating	Size	Size	Max. Weight		Link size Min	Min	Max	Max
SMX		[sTon/ Tonne]	[inch]	[mm]	[lbs]	[kg]	[inch]	[mm]	[inch]	[mm]
50006430Y102	10143542-062	150 / 136	3.1/2	88.9	278	126	2.1/4	57	2.3/4	70
50006430Y103	10143542-063	150 / 136	3.1/2	88.9	278	126	2.1/4	57	2.3/4	70
50006430Y104	10143542-064	150 / 136	4	101.6	278	126	2.1/4	57	2.3/4	70
50006430Y105	10143542-065	150 / 136	4.1/2	114.3	278	126	2.1/4	57	2.3/4	70
50006430Y106	10143542-066	150 / 136	4.1/2	114.3	278	126	2.1/4	57	2.3/4	70
50006430Y107	10143542-067	150 / 136	5.1/2	139.7	278	126	2.1/4	57	2.3/4	70
50006430Y129	10143542-002	150 / 136	4.1/2	114.3	278	126	2.1/4	57	2.3/4	70
50006430Y130	10143542-024	150 / 136	4.3/4	120.7	278	126	2.1/4	57	2.3/4	70
50006430Y131	10143542-026	150 / 136	5	127	278	126	2.1/4	57	2.3/4	70
50006430Y132	10143542-028	150 / 136	5.1/2	139.7	278	126	2.1/4	57	2.3/4	70
50006430Y133	10143542-030	150 / 136	5.3/4	146.1	278	126	2.1/4	57	2.3/4	70
50006430Y134	10143542-089	150 / 136	6		278	126	2.1/4	57	2.3/4	70
50006430Y162	10143542-033	150 / 136	3.1/2	88.9	278	126	2.1/4	57	2.3/4	70
50006430Y163	10143542-036	150 / 136	3.1/2	88.9	278	126	2.1/4	57	2.3/4	70
50006430Y164	10143542-038	150 / 136	4	101.6	278	126	2.1/4	57	2.3/4	70
50006430Y165	10143542-068	150 / 136	4	101.6	278	126	2.1/4	57	2.3/4	70
50006430Y167	10143542-069	150 / 136	4.1/2	114.3	278	126	2.1/4	57	2.3/4	70
50006430Y177	10143542-070	150 / 136	4.1/8	104.7	278	126	2.1/4	57	2.3/4	70
50006430Y179	10143542-071	150 / 136	5.1/4	133.4	278	126	2.1/4	57	2.3/4	70
50006430Y180	10143542-072	150 / 136	5.1/2	139.7	278	126	2.1/4	57	2.3/4	70
50006430Y181	10143542-073	150 / 136	5.3/4	146.1	278	126	2.1/4	57	2.3/4	70
50006430Y209	10143542-074	150 / 136	3.1/2	88.9	278	126	2.1/4	57	2.3/4	70
50006430Y211	10143542-075	150 / 136	3.3/4	95.25	278	126	2.1/4	57	2.3/4	70
50006430Y215	10143542-076	150 / 136	4.1/2	114.3	278	126	2.1/4	57	2.3/4	70
50006430Y219	10143542-077	150 / 136	5.1/4	133.4	278	126	2.1/4	57	2.3/4	70
50006430Y222	10143542-078	150 / 136	5.3/4	146.1	278	126	2.1/4	57	2.3/4	70
50006430Y337	10143542-046	150 / 136	6.1/4	158.8	278	126	2.1/4	57	2.3/4	70
50006430Y354	10143542-048	150 / 136	4.3/4	120.7	278	126	2.1/4	57	2.3/4	70
50006430Y362	10143542-079	150 / 136	6	152.4	278	126	2.1/4	57	2.3/4	70
50006430Y409	10143542-081	150 / 136	6.3/8	161.9	278	126	2.1/4	57	2.3/4	70
50006430Y411	10143542-082	150 / 136	5.1/2	139.7	278	126	2.1/4	57	2.3/4	70
50006430Y435	10143542-052	150 / 136	4.3/4	120.7	278	126	2.1/4	57	2.3/4	70
50006430Y519	10143542-054	150 / 136	4.1/8	104.8	278	126	2.1/4	57	2.3/4	70

Part number	Oracle number	Load Rating	Size	Size	Max. Weight		Link size Min	Min	Max	Max
SMX		[sTon/ Tonne]	[inch]	[mm]	[lbs]	[kg]	[inch]	[mm]	[inch]	[mm]
50006430Y530	10143542-083	150 / 136	5	127	278	126	2.1/4	57	2.3/4	70
50006430Y548	10143542-084	150 / 136	4.1/2	114.3	278	126	2.1/4	57	2.3/4	70
50006430Y552	10143542-085	150 / 136	5	127	278	126	2.1/4	57	2.3/4	70
50006430Y582	10143542-086	150 / 136	3.3/4	95.3	278	126	2.1/4	57	2.3/4	70
50006430Y674	10143542-087	150 / 136	4.1/4	108	278	126	2.1/4	57	2.3/4	70
50006430Y795	10143542-056	150 / 136	3.3/8	85.7	278	126	2.1/4	57	2.3/4	70
50006430Y862	10143542-088	150 / 136	3.3/4	95.3	278	126	2.1/4	57	2.3/4	70
50006430Y905	10143542-058	150 / 136	5.146	130.7	278	126	2.1/4	57	2.3/4	70
50006438Y134	10034495-005	150 / 136	6	152.4	291	132	2.1/4	57	3.1/2	89
50006438Y135	10034495-006	150 / 136	6.5/8	168.3	291	132	2.1/4	57	3.1/2	89
50006438Y136	10034495-001	150 / 136	7	184.8	291	132	2.1/4	57	3.1/2	89
50006438Y137	10034495-007	150 / 136	7.5/8	193.7	291	132	2.1/4	57	3.1/2	89
50006438Y139	10034495-008	150 / 136	8.5/8	219.1	291	132	2.1/4	57	3.1/2	89
50006438Y140	10034495-023	150 / 136	9	228.6	291	132	2.1/4	57	3.1/2	89
50006438Y331	10034495-024	150 / 136	6.3/8	162	291	132	2.1/4	57	3.1/2	89
50006438Y334	10034495-010	150 / 136	8	203.2	291	132	2.1/4	57	3.1/2	89
50006438Y336	10034495-011	150 / 136	8	203.2	291	132	2.1/4	57	3.1/2	89
50006438Y338	10034495-025	150 / 136	6.3/4	171.5	291	132	2.1/4	57	3.1/2	89
50006438Y339	10034495-026	150 / 136	7.3/4	196.9	291	132	2.1/4	57	3.1/2	89
50006438Y347	10034495-027	150 / 136	8.1/4	209.6	291	132	2.1/4	57	3.1/2	89
50006438Y348	10034495-028	150 / 136	6.1/4	158.8	291	132	2.1/4	57	3.1/2	89
50006438Y349	10034495-029	150 / 136	6	152.4	291	132	2.1/4	57	3.1/2	89
50006438Y356	10034495-030	150 / 136	9	228.6	291	132	2.1/4	57	3.1/2	89
50006438Y357	10034495-031	150 / 136	7.1/4	184.2	291	132	2.1/4	57	3.1/2	89
50006438Y361	10034495-032	150 / 136	7	184.8	291	132	2.1/4	57	3.1/2	89
50006438Y372	10034495-033	150 / 136	7	184.8	291	132	2.1/4	57	3.1/2	89
50006438Y373	10034495-013	150 / 136	6.1/2	165.1	291	132	2.1/4	57	3.1/2	89
50006438Y387	10034495-014	150 / 136	6.3/4	171.5	291	132	2.1/4	57	3.1/2	89
50006438Y442	10034495-015	150 / 136	8.1/4	209.6	291	132	2.1/4	57	3.1/2	89
50006438Y426	10034495-034	150 / 136	8.1/2	215.9	291	132	2.1/4	57	3.1/2	89
50006438Y427	10034495-035	150 / 136	9	228.6	291	132	2.1/4	57	3.1/2	89
50006438Y486	10034495-036	150 / 136	6.1/2	165.1	291	132	2.1/4	57	3.1/2	89
50006438Y550	10034495-037	150 / 136	7.3/4	196.9	291	132	2.1/4	57	3.1/2	89
50006438Y553	10034495-038	150 / 136	8.3/4	222.3	291	132	2.1/4	57	3.1/2	89
50006438Y620	10034495-039	150 / 136	7.3/8	187.3	291	132	2.1/4	57	3.1/2	89
50006438Y697	10034495-016	150 / 136	8.1/8	206.4	291	132	2.1/4	57	3.1/2	89
50006438Y705	10034495-017	150 / 136	7.3/4	196.9	291	132	2.1/4	57	3.1/2	89
50006438Y765	10034495-040	150 / 136	6.1/2	165.1	291	132	2.1/4	57	3.1/2	89
50006438Y804	10034495-041	150 / 136	8.3/4	222.3	291	132	2.1/4	57	3.1/2	89
50006438Y841	10034495-042	150 / 136	7.721	196.1	291	132	2.1/4	57	3.1/2	89
50006438Y842	10034495-043	150 / 136	7.947	201.9	291	132	2.1/4	57	3.1/2	89
50006438Y843	10034495-046	150 / 136	7.752	196.9	291	132	2.1/4	57	3.1/2	89
50006438Y844	10034495-044	150 / 136	7.129	181.1	291	132	2.1/4	57	3.1/2	89
50006454Y141	10034504-001	150 / 136	9.5/8	244.5	406	187	2.1/4	57	3.1/2	89
50006454Y142	10143624-005	150 / 136	10.3/4	273.1	406	187	2.1/4	57	3.1/2	89
50006454Y143	10143624-007	150 / 136	11.3/4	298.5	406	187	2.1/4	57	3.1/2	89
50006454Y144	10034506-001	150 / 136	13.3/8	339.8	406	187	2.1/4	57	3.1/2	89
50006454Y195	10143624-010	150 / 136	10	254	406	187	2.1/4	57	3.1/2	89
50006454Y228	10143624-011	150 / 136	10	254	406	187	2.1/4	57	3.1/2	89
50006454Y345	10143624-012	150 / 136	12.3/4	323.9	406	187	2.1/4	57	3.1/2	89
50006454Y346	10143624-013	150 / 136	9.1/2	241.3	406	187	2.1/4	57	3.1/2	89
50006454Y367	10143624-014	150 / 136	9.3/4	247.7	406	187	2.1/4	57	3.1/2	89
50006454Y370	10143624-015	150 / 136	9.1/2	241.3	406	187	2.1/4	57	3.1/2	89

Part number	Oracle number	Load Rating	Size	Size	Max. Weight		Link size Min	Min	Max	Max
SMX		[sTon/ Tonne]	[inch]	[mm]	[lbs]	[kg]	[inch]	[mm]	[inch]	[mm]
50006454Y419	10143624-016	150 / 136	11	279.4	406	187	2.1/4	57	3.1/2	89
50006454Y427	10143624-017	150 / 136	9	228.6	406	187	2.1/4	57	3.1/2	89
50006454Y471	10143624-018	150 / 136	10	254	406	187	2.1/4	57	3.1/2	89
50006454Y578	10143624-019	150 / 136	14	355.6	406	187	2.1/4	57	3.1/2	89
50006454Y600	10143624-020	150 / 136	9.5/8	244.5	406	187	2.1/4	57	3.1/2	89
50006454Y649	10143624-021	150 / 136	9.7/8	250.8	406	187	2.1/4	57	3.1/2	89
50006454Y676	10143624-002	150 / 136	12.7/8	342.9	406	187	2.1/4	57	3.1/2	89
50006454Y704	10143624-023	150 / 136	11	279.4	406	187	2.1/4	57	3.1/2	89
50006454Y711	10143624-024	150 / 136	12	304.8	406	187	2.1/4	57	3.1/2	89
50006454Y720	10143624-025	150 / 136	12.1/4	311.2	406	187	2.1/4	57	3.1/2	89
50006454Y729	10143624-026	150 / 136	11.7/8	342.9	406	187	2.1/4	57	3.1/2	89
50006454Y769	10143624-027	150 / 136	9.3/4	247.7	406	187	2.1/4	57	3.1/2	89
50006454Y808	10143624-028	150 / 136	10.1/4	260.4	406	187	2.1/4	57	3.1/2	89
50006454Y809	10143624-029	150 / 136	13	330.2	406	187	2.1/4	57	3.1/2	89
50006454Y830	10143624-030	150 / 136	12.430	315.7	406	187	2.1/4	57	3.1/2	89
50006454Y831	10143624-031	150 / 136	10	254	406	187	2.1/4	57	3.1/2	89
50006454Y839	10143624-032	150 / 136	11.952	278.2	406	187	2.1/4	57	3.1/2	89
50006454Y840	10143624-033	150 / 136	10.335	262.5	406	187	2.1/4	57	3.1/2	89
50006454Y865	10143624-034	150 / 136	9.3/8	238.1	406	187	2.1/4	57	3.1/2	89
50006454Y906	10143624-035	150 / 136	9.788	248.6	406	187	2.1/4	57	3.1/2	89
50006454Y907	10143624-036	150 / 136	11.988	304.5	406	187	2.1/4	57	3.1/2	89
50006454Y910	10143624-037	150 / 136	12.072	306.6	406	187	2.1/4	57	3.1/2	89
50006454Y911	10143624-040	150 / 136	11.045	280.5	406	187	2.1/4	57	3.1/2	89
50006454Y912	10143624-038	150 / 136	10.996	279.3	406	187	2.1/4	57	3.1/2	89
50006454Y913	10143624-039	150 / 136	10.065	255.7	406	187	2.1/4	57	3.1/2	89
50006426Y134	10143523-004	250 / 227	6	152.4	474	215	2.1/4	57	3.1/2	89
50006426Y135	10143523-005	250 / 227	6.5/8	168.3	474	215	2.1/4	57	3.1/2	89
50006426Y136	10143523-008	250 / 227	7	177.8	474	215	2.1/4	57	3.1/2	89
50006426Y137	10143523-010	250 / 227	7.5/8	244.5	474	215	2.1/4	57	3.1/2	89
50006426Y139	10143523-012	250 / 227	8.5/8	244.5	474	215	2.1/4	57	3.1/2	89
50006426Y140	10143523-013	250 / 227	9	228.6	474	215	2.1/4	57	3.1/2	89
50006426Y336	10143523-014	250 / 227	8	203.2	474	215	2.1/4	57	3.1/2	89
50006426Y337	10143523-015	250 / 227	6.1/4	158.8	474	215	2.1/4	57	3.1/2	89
50006426Y361	10143523-016	250 / 227	7	184.8	474	215	2.1/4	57	3.1/2	89
50006426Y373	10143523-017	250 / 227	6.1/2	165.1	474	215	2.1/4	57	3.1/2	89
50006426Y387	10143523-018	250 / 227	6.3/4	171.5	474	215	2.1/4	57	3.1/2	89
50006426Y422	10143523-019	250 / 227	8.1/4	209.6	474	215	2.1/4	57	3.1/2	89
50006426Y426	10143523-020	250 / 227	8.1/2	215.9	474	215	2.1/4	57	3.1/2	89
50006426Y427	10143523-021	250 / 227	9	228.6	474	215	2.1/4	57	3.1/2	89
50006426Y563	10143523-022	250 / 227	7.1/4	184.2	474	215	2.1/4	57	3.1/2	89
50006426Y801	10143523-023	250 / 227	7.3/8	187.3	474	215	2.1/4	57	3.1/2	89
50006426Y888	Contact NOV	250 / 227	7.1/2	190.5	474	215	2.1/4	57	3.1/2	89
50006426Y914	10143523-025	250 / 227	7.5/8	244.5	474	215	2.1/4	57	3.1/2	89
50006426Y928	10143523-024	250 / 227	7.1/4	184.2	474	215	2.1/4	57	3.1/2	89
50006740Y141	10088833-001	250 / 227	9.5/8	244.5	563	255	2.1/4	57	3.1/2	89
50006740Y142	10721814-001	250 / 227	10.3/4	323.9	563	255	2.1/4	57	3.1/2	89
50006740Y143	10721814-010	250 / 227	11.3/4	323.9	563	255	2.1/4	57	3.1/2	89
50006740Y144	10034518-001	250 / 227	13.3/8	339.7	563	255	2.1/4	57	3.1/2	89
50006740Y195	10721814-013	250 / 227	10	254	563	255	2.1/4	57	3.1/2	89
50006740Y345	10721814-015	250 / 227	12.3/4	323.9	563	255	2.1/4	57	3.1/2	89
50006740Y370	10721814-016	250 / 227	9.1/2	241.3	563	255	2.1/4	57	3.1/2	89
50006740Y471	10721814-017	250 / 227	10	254	563	255	2.1/4	57	3.1/2	89

Part number	Oracle number	Load Rating	Size	Size	Max. Weight		Link size Min	Min	Max	Max
SMX		[sTon/ Tonne]	[inch]	[mm]	[lbs]	[kg]	[inch]	[mm]	[inch]	[mm]
50006740Y649	10721814-028	250 / 227	9.7/8	244.5	563	255	2.1/4	57	3.1/2	89
50006740Y676	10721814-019	250 / 227	12.7/8	342.9	563	255	2.1/4	57	3.1/2	89
50006740Y704	10721814-020	250 / 227	11	279.4	563	255	2.1/4	57	3.1/2	89
50006740Y711	10721814-021	250 / 227	12	304.8	563	255	2.1/4	57	3.1/2	89
50006740Y729	10721814-022	250 / 227	11.7/8	342.9	563	255	2.1/4	57	3.1/2	89
50006740Y808	10721814-027	250 / 227	10.1/4	260.4	563	255	2.1/4	57	3.1/2	89
50006740Y809	10721814-024	250 / 227	13	330.2	563	255	2.1/4	57	3.1/2	89
50006740Y831	10721814-025	250 / 227	10	254	563	255	2.1/4	57	3.1/2	89
50006740Y865	10721814-026	250 / 227	9.3/8	238.1	563	255	2.1/4	57	3.1/2	89
50006440Y141	10143587-006	350 / 318	9.5/8	244.5	563	255	2.1/4	57	3.1/2	89
50006440Y142	10143587-007	350 / 318	10.3/4	323.9	563	255	2.1/4	57	3.1/2	89
50006440Y143	10143587-008	350 / 318	11.3/4	323.9	563	255	2.1/4	57	3.1/2	89
50006440Y144	10143587-009	350 / 318	13.3/8	339.7	563	255	2.1/4	57	3.1/2	89
50006440Y345	10143587-011	350 / 318	12.3/4	323.9	563	255	2.1/4	57	3.1/2	89
50006440Y356	10143587-012	350 / 318	9	228.6	563	255	2.1/4	57	3.1/2	89
50006440Y370	10143587-013	350 / 318	9.1/2		563	255	2.1/4	57	3.1/2	89
50006440Y435	Contact NOV	350 / 318	12.3/4	323.9	563	255	2.1/4	57	3.1/2	89
50006440Y471	10143587-014	350 / 318	10	254	563	255	2.1/4	57	3.1/2	89
50006440Y589	10143587-015	350 / 318	12	304.8	563	255	2.1/4	57	3.1/2	89
50006440Y649	10143587-016	350 / 318	9.7/8	244.5	563	255	2.1/4	57	3.1/2	89
50006440Y676	10143587-017	350 / 318	12.7/8	342.9	563	255	2.1/4	57	3.1/2	89
50006440Y704	10143587-018	350 / 318	11	279.4	563	255	2.1/4	57	3.1/2	89
50006440Y711	10143587-019	350 / 318	12	304.8	563	255	2.1/4	57	3.1/2	89
50006440Y729	10143587-020	350 / 318	11.7/8	342.9	563	255	2.1/4	57	3.1/2	89
50006440Y769	10143587-021	350 / 318	9.3/4	247.7	563	255	2.1/4	57	3.1/2	89
50006440Y808	10143587-022	350 / 318	10.1/4	260.4	563	255	2.1/4	57	3.1/2	89
50006440Y809	10143587-023	350 / 318	13	330.2	563	255	2.1/4	57	3.1/2	89
50006440Y830	10143587-024	350 / 318	12.430	315.7	563	255	2.1/4	57	3.1/2	89
50006440Y831	10143587-025	350 / 318	10	254	563	255	2.1/4	57	3.1/2	89
50006440Y846	10143587-026	350 / 318	10.1/8	257.2	563	255	2.1/4	57	3.1/2	89
50006440Y865	10143587-027	350 / 318	9.3/8	238.1	563	255	2.1/4	57	3.1/2	89
50006450Y145	10143612-005	250 / 227	16	406.4	679	308	2.1/4	57	3.1/2	89
50006450Y596	10143612-006	250 / 227	13.5/8	346.1	679	308	2.1/4	57	3.1/2	89
50006450Y616	10143612-007	250 / 227	13.1/2	342.9	679	308	2.1/4	57	3.1/2	89
50006450Y664	10143612-008	250 / 227	16.3/4	425.5	679	308	2.1/4	57	3.1/2	89
50006450Y690	10143612-009	250 / 227	14	355.6	679	308	2.1/4	57	3.1/2	89
50006450Y813	10143612-010	250 / 227	17	431.8	679	308	2.1/4	57	3.1/2	89
50006450Y815	10143612-011	250 / 227	16.257	412.9	679	308	2.1/4	57	3.1/2	89
50006450Y825	10143612-012	250 / 227	15	381	679	308	2.1/4	57	3.1/2	89
50006450Y837	10143612-013	250 / 227	13.885	352.7	679	308	2.1/4	57	3.1/2	89
50006450Y859	10143612-014	250 / 227	17.7/8	454.1	679	308	2.1/4	57	3.1/2	89
50006450Y877	10143612-015	250 / 227	14.1/2	368.3	679	308	2.1/4	57	3.1/2	89
50006450Y908	10143612-016	250 / 227	13.646	346.6	679	308	2.1/4	57	3.1/2	89
50006450Y909	10143612-017	250 / 227	13.7/8	352.4	679	308	2.1/4	57	3.1/2	89
50006460Y146	10111421-001	250 / 227	18.5/8	473.1	902	409	2.1/4	57	3.1/2	89
50006460Y147	10034514-001	250 / 227	20	508	902	409	2.1/4	57	3.1/2	89
50006460Y148	10143649-008	250 / 227	21.1/2	546.1	902	409	2.1/4	57	3.1/2	89

Part number	Oracle number	Load Rating	Size	Size	Max. Weight		Link size Min	Min	Max	Max
SMX		[sTon/ Tonne]	[inch]	[mm]	[lbs]	[kg]	[inch]	[mm]	[inch]	[mm]
50006460Y149	10143649-009	250 / 227	24.1/2	622.3	902	409	2.1/4	57	3.1/2	89
50006460Y630	10143649-010	250 / 227	24	609.6	902	409	2.1/4	57	3.1/2	89
50006460Y640	10143649-011	250 / 227	21	533.4	902	409	2.1/4	57	3.1/2	89
50006460Y669	10143649-012	250 / 227	18.788	477.2	902	409	2.1/4	57	3.1/2	89
50006460Y688	10143649-014	250 / 227	22	558.8	902	409	2.1/4	57	3.1/2	89
50006460Y723	10143649-015	250 / 227	18	457.2	902	409	2.1/4	57	3.1/2	89
50006460Y803	10143649-016	250 / 227	18.3/16	462	902	409	2.1/4	57	3.1/2	89
50006460Y876	10721275-001	250 / 227	22.1/2	571.5	902	409	2.1/4	57	3.1/2	89

SX-series

NOV "SX" type elevators are conventional size door latch collar type elevators for handling a single joint of casing or tubing. The SX type elevator has a 250 up to 500 ton capacity covering pipe sizes from 9.5/8” - 13.3/8” OD.

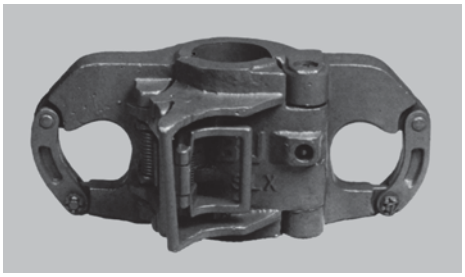

Part number	Oracle number	Load Rating	Size	Size	Max. Weight		Link size Min	Min	Max	Max
SX		[sTon/ Tonne]	[inch]	[mm]	[lbs]	[kg]	[inch]	[mm]	[inch]	[mm]
29965Y141	Contact NOV	350 / 317	9.5/8	244.5	1,200	544	2.1/4	57	3.1/2	89
29965Y142	10139119-004	350 / 317	10.3/4	323.9	1,200	544	2.1/4	57	3.1/2	89
29965Y143	Contact NOV	350 / 317	11.3/4	323.9	1,200	544	2.1/4	57	3.1/2	89
29965Y144	10139119-003	350 / 317	13.3/8	339.7	1,200	544	2.1/4	57	3.1/2	89
29965Y345	Contact NOV	350 / 317	12.3/4	323.9	1,200	544	2.1/4	57	3.1/2	89
29965Y589	Contact NOV	350 / 317	12	304.8	1,200	544	2.1/4	57	3.1/2	89
29965Y596	10139119-001	350 / 317	13.5/8	346.1	1,200	544	2.1/4	57	3.1/2	89
29965Y649	10139119-005	350 / 317	9.7/8	244.5	1,200	544	2.1/4	57	3.1/2	89
29965Y822	Contact NOV	350 / 317	14	355.6	1,200	544	2.1/4	57	3.1/2	89
29965Y831	Contact NOV	350 / 317	10	254	1,200	544	2.1/4	57	3.1/2	89
29965Y846	Contact NOV	350 / 317	10.1/8	257.2	1,200	544	2.1/4	57	3.1/2	89
29964Y141	10139114-003	500 / 454	9.5/8	244.5	1,235	560	2.3/4	70	3.1/2	89
29964Y142	10139114-004	500 / 454	10.3/4	323.9	1,235	560	2.3/4	70	3.1/2	89
29964Y143	Contact NOV	500 / 454	11.3/4	323.9	1,235	560	2.3/4	70	3.1/2	89
29964Y144	10139114-005	500 / 454	13.3/8	339.7	1,235	560	2.3/4	70	3.1/2	89
29964Y345	Contact NOV	500 / 454	12.3/4	323.9	1,235	560	2.3/4	70	3.1/2	89
29964Y596	10139114-006	500 / 454	13.5/8	346.1	1,235	560	2.3/4	70	3.1/2	89
29964Y649	10139114-007	500 / 454	9.7/8	244.5	1,235	560	2.3/4	70	3.1/2	89
29964Y728	Contact NOV	500 / 454	10	254	1,235	560	2.3/4	70	3.1/2	89
30729Y145	Contact NOV	350 / 317	16	406.4	1,200	544	2.3/4	70	3.1/2	89
30729Y644	Contact NOV	350 / 317	16.3/4	425.5	1,200	544	2.3/4	70	3.1/2	89

Part number	Oracle number	Load Rating	Size	Size	Max. Weight		Link size Min	Min	Max	Max
SLX-DD		**[sTon/ Tonne]**	**[inch]**	**[mm]**	**[lbs]**	**[kg]**	**[inch]**	**[mm]**	**[inch]**	**[mm]**
52755Y149	10702554-001	250 / 225	24.1/2	622.3	1,820	826	1.3/4	44	3.1/2	89
52755Y630	10702555-001	250 / 225	24	609.6	1,820	826	1.3/4	44	3.1/2	89
52755Y644	10034948-001	250 / 225	30	792	1,820	826	1.3/4	44	3.1/2	89
52755Y650	10702559-001	250 / 225	26	660.4	1,820	826	1.3/4	44	3.1/2	89
52755Y693	10702560-001	250 / 225	28	711.2	1,820	826	1.3/4	44	3.1/2	89
52755Y918	10702562-001	250 / 225	25	635	1,820	826	1.3/4	44	3.1/2	89
30598Y146	Contact NOV	250 / 225	18.5/8	473.1	1,700	771	1.3/4	44	3.1/2	89
30598Y147	Contact NOV	250 / 225	20	508	1,700	771	1.3/4	44	3.1/2	89
30598Y669	Contact NOV	250 / 225	18.788	477.2	1,700	771	1.3/4	44	3.1/2	89
30598Y718	Contact NOV	250 / 225	Contact NOV		1,700	771	1.3/4	44	3.1/2	89
30598Y723	Contact NOV	250 / 225	18	457.2	1,700	771	1.3/4	44	3.1/2	89
30598Y771	Contact NOV	250 / 225	Contact NOV		1,700	771	1.3/4	44	3.1/2	89

Link handle kit

The Link handle kit can be used in combination with a SMX or other kind of Manual Elevator side-door type. It is developed for easier and safer closing the elevator. Part number 50006435 / Oracle number 10019468-001. Will fit on 350 and 250 sTon links.

Single joint elevators

SJL & SPL series elevators

SJL and SPL single-joint, center-latch elevators are designed to replace unsafe rope slings for hoisting collar-type pipe into position. The SJL 90° elevator enables the crew to handle pipe properly, help avoid damage to pipe threads and reduce the chances of accident or injury. The SPL elevator is the same as the SJL elevator except that the SPL elevator is designed for use on tapered pipe, conforming to API specifications for extreme line casing.

SPL

The SJL are conventional collar type center latch elevators with 5 sTon rating up tp 11” and 7.5 sTon from 11.1/8” up to 30” and are designed to handle collar type tubular from size 2.3/8” to 30”

SJL

Technical specifications SJL SERIES

Type	Part number	Oracle number	Load Rating [sTon/Tonne]	Size [inch]	Size [mm]	Max. Weight [lbs]	Max. Weight [kg]
SJL	Bore code 160	10146447-001	5 / 4.5	2.7/8	73.1	45	20
SJL	Bore code 158	10146447-002	5 / 4.5	2.3/8	60.3	45	20
SJL	70499Y101	10146447-014	5 / 4.5	2.7/8	73.1	45	20
SJL	70499Y102	10146447-004	5 / 4.5	Contact NOV		45	20
SJL	70499Y103	10146447-005	5 / 4.5	3.1/2	88.9	45	20
SJL	70499Y110	10146447-017	5 / 4.5	2.3/8	60.3	45	20
SJL	70499Y156	10146447-006	5 / 4.5	1.90	46.26	45	20
SJL	70499Y158	10146447-019	5 / 4.5	2.3/8	60.3	45	20
SJL	70499Y159	10146447-021	5 / 4.5	2.3/8	60.3	45	20
SJL	70499Y160	10146447-023	5 / 4.5	2.7/8	73.1	45	20
SJL	70499Y161	10146447-025	5 / 4.5	2.7/8	73.1	45	20
SJL	70499Y162	10146447-027	5 / 4.5	3.1/2	88.9	45	20
SJL	70499Y163	10146447-030	5 / 4.5	3.1/2	88.9	45	20
SJL	70499Y206	10146447-032	5 / 4.5	Contact NOV		45	20
SJL	70499Y211	10146447-007	5 / 4.5	Contact NOV		45	20
SJL	70499Y625	10146447-003	5 / 4.5	3.1/2	88.9	45	20
SJL	70499Y685	10146447-008	5 / 4.5	Contact NOV		45	20
SJL	70499Y785	10146447-009	5 / 4.5	Contact NOV		45	20
SJL	70500Y105	10161770-004	5 / 4.5	4	101.6	51	23
SJL	70500Y106	10161770-005	5 / 4.5	4.1/2	100.8	51	23
SJL	70500Y123	Contact NOV	5 / 4.5	5	127	51	23
SJL	70500Y124	Contact NOV	5 / 4.5	5	127	51	23
SJL	70500Y129	10161770-006	5 / 4.5	4.1/2	100.8	51	23
SJL	70500Y130	10161770-008	5 / 4.5	4.3/4	120.7	51	23
SJL	70500Y131	10161770-010	5 / 4.5	5	127	51	23
SJL	70500Y132	10161770-012	5 / 4.5	5.1/2	126.2	51	23
SJL	70500Y164	10161770-016	5 / 4.5	4	101.6	51	23
SJL	70500Y165	10161770-018	5 / 4.5	4	101.6	51	23
SJL	70500Y167	10161770-020	5 / 4.5	4.1/2	100.8	51	23
SJL	70500Y213	10161770-022	5 / 4.5	4	101.6	51	23
SJL	70500Y435	10161770-029	5 / 4.5	4.3/4	120.7	51	23
SJL	70500Y519	10161770-028	5 / 4.5	4.1/8	104.8	51	23
SJL	70500Y810	10161770-030	5 / 4.5	Contact NOV		51	23
SJL	70500Y905	10161770-024	5 / 4.5	5.146	130.7	51	23
SJL	70501Y133	10722134-028	5 / 4.5	5.3/4	146.05	72	32
SJL	70501Y134	10722134-030	5 / 4.5	6	152.4	72	32
SJL	70501Y135	10722134-032	5 / 4.5	6.5/8	168.3	72	32
SJL	70501Y136	10046165-001	5 / 4.5	7	177.8	72	32
SJL	70501Y137	10722134-019	5 / 4.5	7.5/8	193.7	72	32
SJL	70501Y331	10722134-001	5 / 4.5	6.3/8	161.9	72	32
SJL	70501Y336	10722134-006	5 / 4.5	8	152.4	72	32
SJL	70501Y337	10722134-007	5 / 4.5	6.1/4	158.8	72	32
SJL	70501Y373	10722134-008	5 / 4.5	6.1/2	165.1	72	32
SJL	70501Y387	10722134-009	5 / 4.5	6.3/4	171.5	72	32
SJL	70501Y563	10722134-004	5 / 4.5	7.1/4	184.2	72	32
SJL	70501Y705	10722134-023	5 / 4.5	7.3/4	196.9	72	32
SJL	70501Y807	10722134-010	5 / 4.5	7.797	168.1	72	32
SJL	70501Y844	10722134-011	5 / 4.5	Contact NOV		72	32
SJL	70501Y889	10722134-045	5 / 4.5	5.7/8	149.2	72	32
SJL	70502Y133	10722134-028	5 / 4.5	5.3/4	146.1	98	44

Type	Part number	Oracle number	Load Rating [sTon/Tonne]	Size [inch]	Size [mm]	Max. Weight [lbs]	Max. Weight [kg]
SJL	70502Y139	10046192-005	5 / 4.5	8.5/8	219.1	98	44
SJL	70502Y140	Contact NOV	5 / 4.5	9	228.6	98	44
SJL	70502Y141	10046192-001	5 / 4.5	9.5/8	244.5	98	44
SJL	70502Y142	10046192-001	5 / 4.5	10.3/4	323.9	98	44
SJL	70502Y228	10046192-049	5 / 4.5	Contact NOV		98	44
SJL	70502Y347	10046192-033	5 / 4.5	8.1/4	209.6	98	44
SJL	70502Y370	10046192-034	5 / 4.5	9.1/2	241.3	98	44
SJL	70502Y471	10046192-035	5 / 4.5	10	254	98	44
SJL	70502Y649	10046192-015	5 / 4.5	9.7/8	244.5	98	44
SJL	70502Y677	10046192-036	5 / 4.5	8.5/16	211.1	98	44
SJL	70502Y697	10046192-037	5 / 4.5	8.1/8	206.4	98	44
SJL	70502Y704	10046192-019	5 / 4.5	11	279.4	98	44
SJL	70502Y767	10046192-020	5 / 4.5	9.5/8	244.5	98	44
SJL	70502Y808	10046192-038	5 / 4.5	10.1/4	260.4	98	44
SJL	70502Y831	10046192-021	5 / 4.5	10	254	98	44
SJL	70502Y840	10046192-039	5 / 4.5	10	254	98	44
SJL	70502Y865	10046192-050	5 / 4.5	9.3/8	238.1	98	44
SJL	70502Y898	10046192-023	5 / 4.5	8.5/8	219.1	98	44
SJL	70502Y906	10046192-024	5 / 4.5	9.788	248.6	98	44
SJL	70502Y911	10046192-025	5 / 4.5	11.045	280.5	98	44
SJL	70502Y912	10046192-048	5 / 4.5	10.996	279.3	98	44
SJL	70502Y913	10046192-046	5 / 4.5	10.065	255.7	98	44
SJL	70502Y924	10046192-026	5 / 4.5	10	254	98	44
SJL	na	10864561-002	5 / 4.5	11.3/4	323.9	121	55
SJL	na	10864561-004	5 / 4.5	13.3/8	339.7	121	55
SJL	na	10864561-006	5 / 4.5	12.3/4	323.9	121	55
SJL	na	10864561-007	5 / 4.5	11.375	254.8	121	55
SJL	na	10864561-001	5 / 4.5	13.5/8	346.1	121	55
SJL	na	10864561-009	5 / 4.5	13.1/2	342.9	121	55
SJL	na	10864561-010	7.5 / 6.8	12.7/8	355.6	121	55
SJL	na	10864561-011	7.5 / 6.8	14	355.6	121	55
SJL	na	10864561-013	7.5 / 6.8	12.1/4	311.2	121	55
SJL	na	10864561-014	7.5 / 6.8	11.7/8	301.6	121	55
SJL	na	10864561-015	7.5 / 6.8	13.3/8	339.7	121	55
SJL	na	10864561-016	7.5 / 6.8	13	330.2	121	55
SJL	na	10864561-017	7.5 / 6.8	13.552	344.2	121	55
SJL	na	10864561-018	7.5 / 6.8	11.952	303.6	121	55
SJL	na	10864561-019	7.5 / 6.8	11.3/4	323.9	121	55
SJL	na	10864561-020	7.5 / 6.8	12.5/8	320.7	121	55
SJL	na	10864561-021	7.5 / 6.8	11.283	286.6	121	55
SJL	na	10864561-022	7.5 / 6.8	11.988	304.5	121	55
SJL	na	10864561-024	7.5 / 6.8	13.646	346.6	121	55
SJL	na	10864561-026	7.5 / 6.8	13.875	352.4	121	55
SJL	na	10864561-028	7.5 / 6.8	12.072	301.8	121	55
SJL	na	10864561-034	7.5 / 6.8	13.3/4	349.3	121	55
SJL	na	10837790-002	7.5 / 6.8	14.5	368.3	233	
SJL	na	10837790-003	7.5 / 6.8	16	406.4	233	105
SJL	na	10837790-005	7.5 / 6.8	18.5/8	473.1	233	105
SJL	na	10837790-006	7.5 / 6.8	20	508	233	105
SJL	na	10837790-008	7.5 / 6.8	16.3/4	425.5	233	105
SJL	na	10837790-009	7.5 / 6.8	18.788	477.2	233	105
SJL	na	10837790-010	7.5 / 6.8	16.1/6	410.6	233	105

Type	Part number	Oracle number	Load Rating [sTon/Tonne]	Size [inch]	Size [mm]	Max. Weight [lbs]	Max. Weight [kg]
SJL	na	10837790-011	7.5 / 6.8	18	457.2	233	105
SJL	na	10837790-013	7.5 / 6.8	16	406.4	233	105
SJL	na	10837790-014	7.5 / 6.8	15.875	403.2	233	105
SJL	na	10837790-015	7.5 / 6.8	17	431.8	233	105
SJL	na	10837790-016	7.5 / 6.8	16.257	412.9	233	105
SJL	na	10837790-017	7.5 / 6.8	17.197	436.8	233	105
SJL	na	10837790-018	7.5 / 6.8	16.507	419.3	233	105
SJL	na	10837790-019	7.5 / 6.8	18.310	465.1	233	105
SJL	na	10837790-021	7.5 / 6.8	16.405	416.7	233	105
SJL	na	10837790-022	7.5 / 6.8	20.5	520.7	233	105
SJL	na	10837790-023	7.5 / 6.8	18.948	481.3	233	105
SJL	na	10837790-024	7.5 / 6.8	17.7/8	454.1	233	105
	Bore code	Oracle number					
SJL	149	10872064-013	7.5 / 6.8	24.1/2	622.3	283	128
SJL	542	10872064-015	7.5 / 6.8	24.250	616	283	128
SJL	630	10872064-011	7.5 / 6.8	24	609.6	283	128
SJL	640	10872064-004	7.5 / 6.8	21	533.4	283	128
SJL	688	10872064-008	7.5 / 6.8	22	558.8	283	128
SJL	876	10872064-009	7.5 / 6.8	22.1/2	571.5	283	128
SJL	800	10872064-014	7.5 / 6.8	20.875	530.2	283	128
SJL	627	10872064-010	7.5 / 6.8	23.1/2	596.9	283	128
SJL	925	10872064-002	7.5 / 6.8	20.3/4	527.1	283	128
SJL	738	10872064-003	7.5 / 6.8	20.7/8	530.2	283	128
SJL	814	10872064-005	7.5 / 6.8	21.1/4	539.8	283	128
SJL	148	10872064-006	7.5 / 6.8	21.1/2	546.1	283	128
SJL	918	10876017-002	7.5 / 6.8	25	635	404	183.3
SJL	650	10876017-003	7.5 / 6.8	26	660.4	404	183.3
SJL	692	10876017-004	7.5 / 6.8	27	685.8	404	183.3
SJL	693	10876017-005	7.5 / 6.8	28	711.2	404	183.3
SJL	945	10876017-006	7.5 / 6.8	29	736.6	404	183.3
SJL	644	10876017-007	7.5 / 6.8	30	762	404	183.3

Technical specifications SPL SERIES

Type	Part number	Oracle number	Load Rating [sTon/ Tonne]	Size [inch]	Size [mm]	Max. Weight [lbs]	Max. Weight [kg]
SPL 5°	200008Y278	10180317-006	5 / 4.5	2.7/8	73.1	77	35
SPL 5°	200008Y312	10180317-007	5 / 4.5	3.1/2	88.9	77	35
SPL 5°	200008Y400	10180317-008	5 / 4.5	4	101.6	77	35
SPL 5°	200008Y412	10180317-009	5 / 4.5	4.1/2	100.8	77	35
SPL 5°	200008Y500	10180317-010	5 / 4.5	5	127	77	35
SPL 5°	200008Y512	10180317-011	5 / 4.5	5.1/2	139.7	77	35
SPL 5°	200010Y512	10177531-013	5 / 4.5	5.1/2	139.7	108	49
SPL 5°	200010Y658	10177531-006	5 / 4.5	6.5/8	168.3	108	49
SPL 5°	200010Y700	10177531-014	5 / 4.5	7	177.8	108	49
SPL 5°	200010Y758	10177531-003	5 / 4.5	7.5/8	193.7	108	49
SPL 12°	200014Y238	10180317-018	5 / 4.5	2.3/8	60.3	86	39
SPL 12°	200014Y278	10180317-019	5 / 4.5	2.7/8	73.1	86	39
SPL 12°	200014Y312	10180317-020	5 / 4.5	3.1/2	88.9	86	39
SPL 12°	200014Y400	10180317-021	5 / 4.5	4	101.6	86	39
SPL 12°	200014Y412	10180317-022	5 / 4.5	4.1/2	100.8	86	39
SPL 12°	200014Y500	10180317-024	5 / 4.5	5	127	86	39
SPL 18°	200009Y238	10180317-014	5 / 4.5	2.3/8	60.3	79	36
SPL 18°	200009Y278	10180317-015	5 / 4.5	2.7/8	73.1	79	36
SPL 18°	200009Y312	10021586-001	5 / 4.5	3.1/2	88.9	79	36
SPL 18°	200009Y400	10180317-016	5 / 4.5	4	101.6	79	36
SPL 18°	200009Y412	10180317-017	5 / 4.5	4.1/2	100.8	79	36
SPL 18°	200009Y500	10021589-001	5 / 4.5	5	127	79	36
SPL 18°	200009Y512	Contact NOV	5 / 4.5	5.1/2	139.7	79	36
SPL 18°	200011Y512	10021604-001	5 / 4.5	5.1/2	139.7	94	42
SPL 18°	200011Y578	10021605-001	5 / 4.5	5.7/8	149.2	94	42
SPL 18°	200011Y658	10021606-001	5 / 4.5	6.5/8	168.3	94	42
SPL 18°	200011Y718	10177531-005	5 / 4.5	6.5/8	168.3	94	42
SPL 18°	200011Y732	10177531-010	5 / 4.5	6.5/8	168.3	94	42

Size components SPL 5° elevators

Size [inch]	Elevator Ass'y No. = Frame No.	Oracle number	Type	Tapered Insert part number	Tapered Insert Oracle number	Qty
2.7/8	200008Y278	10180317-006	SPL 5°	36184-278	10139847-001	6
3.1/2	200008Y312	10180317-007	SPL 5°	36184-312	10139847-003	6
4	200008Y400	10180317-008	SPL 5°	36184-400	10139847-005	6
4.1/2	200008Y412	10180317-009	SPL 5°	36184-412	10139850-001	6
5	200008Y500	10180317-010	SPL 5°	36184-500	10139850-004	6
5.1/2	200008Y512	10180317-011	SPL 5°	36184-512	10139850-006	6
5.1/2	200010Y512	10177531-001	SPL 5°	36248-512	Contact NOV	6
6.5/8	200010Y658	10177531-006	SPL 5°	36248-658	10152737-004	6
7	200010Y700	10177531-014	SPL 5°	36248-700	10152737-006	6
7.5/8	200010Y758	10177531-003	SPL 5°	36248-758	10152737-008	6

Size components SPL 12° & 18° elevators

Size [inch]	Elevator Ass'y No.	Oracle number	Frame No. Used	Type	Tapered Insert	Tapered Insert Oracle number	Qty
2.3/8	200014Y238	10180317-018	200008	SPL 12°	53614-238	10145318-001	6
2.7/8	200014Y278	10180317-019	200008	SPL 12°	53614-278	10145318-004	6
3.1/2	200014Y312	10180317-020	200008	SPL 12°	53614-312	10145318-006	6
4	200014Y400	10180317-021	200008	SPL 12°	53614-400	10145318-008	6
4.1/2	200014Y412	10180317-022	200008	SPL 12°	53614-412	10145318-010	6
5	200014Y500	10180317-024	200008	SPL 12°	53614-500	10145318-012	6
2.3/8	200009Y238	10180317-014	200008	SPL 18°	36185-238	10139854-001	6
2.7/8	200009Y278	10180317-015	200008	SPL 18°	36185-278	10139854-003	6
3.1/2	200009Y312	10021586-001	200008	SPL 18°	36185-312	10139854-005	6
4	200009Y400	10180317-016	200008	SPL 18°	36185-400	10139854-007	6
4.1/2	200009Y412	10180317-017	200008	SPL 18°	36185-412	10139854-009	6
5	200009Y500	10021589-001	200008	SPL 18°	36185-500	10139859-001	6
5.1/2	200011Y512	10021604-001	200010	SPL 18°	70253-512	10146408-001	6
5.7/8	200011Y578	10021605-001	200010	SPL 18°	70253-578	10146408-003	6
6.5/8	200011Y658	10021606-001	200010	SPL 18°	70253-658	10146408-005	6
6.5/8	200011Y718	10177531-005	200010	SPL 18°	70253-718	10146408-007	6

SJL/SPL swivel suspension sling*

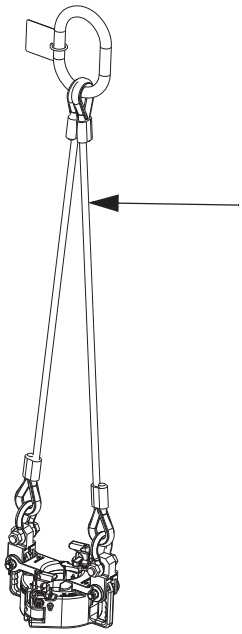

Part number	Oracle number	Rating
pn 50001105	Contact NOV	7.5 sTon / 6.75 Tonne
34568-5	10033182-001	5 sTon / 4.5 Tonne

*Not to be used when rotating with load.

SJX & D-SJX SERIES ELEVATORS

The SJX single joint elevator is designed for running single joints of tubing and casing from V-door to well center. It is double hinged for use with the CRT Casing Running Tool, or any other stabberless operation. It enables the derrick-man on the monkey-board to open the elevator from 2 sides, depending on how the elevator is positioned when stopped. Ergonomically designed handles with cast on stop pins prevent the lifting sling shackles from pinching hands. Suitable for loads up to 5 sTon / 4.5 Tonne.

Technical specifications SJX Series

Type	Part number	Oracle number	Load Rating [sTon/ Tonne]	Size [inch]	Size [mm]	Max. Weight [lbs]	Max. Weight [kg]
SJX	50004929Y129	10712238-001	5 / 4.5	4.1/2	100.8	37	17
SJX	50004929Y158	10712236-001	5 / 4.5	2.3/8	60.3	37	17
SJX	50004929Y159	10712231-001	5 / 4.5	2.3/8	60.3	37	17
SJX	50004929Y160	10712230-001	5 / 4.5	2.7/8	73.1	37	17
SJX	50004929Y161	10712229-001	5 / 4.5	2.7/8	73.1	37	17
SJX	50004929Y162	10712228-001	5 / 4.5	3.1/2	88.9	37	17
SJX	50004929Y163	10712227-001	5 / 4.5	3.1/2	88.9	37	17
SJX	50004929Y164	10712226-001	5 / 4.5	4	101.6	37	17
SJX	50004929Y165	10712225-001	5 / 4.5	4	101.6	37	17
SJX	50004929Y167	10712240-001	5 / 4.5	4.1/2	100.8	37	17
SJX	50004929Y886	10712246-001	5 / 4.5	3.1/8	79.4	37	17
SJX	50004929Y887	10712241-001	5 / 4.5	3.5/8		37	17
SJX	50004931Y129	10712515-001	5 / 4.5	4.1/2	100.8	44	20
SJX	50004931Y130	10712517-001	5 / 4.5	4.3/4	120.7	44	20
SJX	50004931Y131	10712518-001	5 / 4.5	5	127	44	20
SJX	50004931Y132	10712520-001	5 / 4.5	5.1/2	139.7	44	20
SJX	50004931Y133	10712521-001	5 / 4.5	5.3/4	146.1	44	20
SJX	50004931Y134	10712522-001	5 / 4.5	6	152.4	44	20
SJX	50004931Y135	10111385-001	5 / 4.5	6.5/8	168.3	44	20
SJX	50004931Y136	10111386-001	5 / 4.5	7	177.8	44	20
SJX	50004931Y354	10712526-001	5 / 4.5	4.3/4	120.7	44	20
SJX	50004931Y482	10712527-001	5 / 4.5	5.1/8	130.2	44	20
SJX	50004931Y889	10712528-001	5 / 4.5	5.7/8	149.2	44	20
SJX	50004931Y890	10712529-001	5 / 4.5	6.7/8	174.6	44	20

Type	Part number	Oracle number	Load Rating [sTon/ Tonne]	Size [inch]	Size [mm]	Max. Weight [lbs]	Max. Weight [kg]
SJX	50004933Y136	10712550-001	5 / 4.5	7	177.8	57	26
SJX	50004933Y137	10712557-001	5 / 4.5	7.5/8	193.7	57	26
SJX	50004933Y139	10712558-001	5 / 4.5	8.5/8	219.1	57	26
SJX	50004933Y140	10712559-001	5 / 4.5	9	228.6	57	26
SJX	50004933Y141	10111388-001	5 / 4.5	9.5/8	244.5	57	26
SJX	50004933Y142	10111390-001	5 / 4.5	10.3/4	323.9	57	26
SJX	50004933Y144	10111391-001	5 / 4.5	13.3/8	339.7	57	26
SJX	50004933Y563	10712593-001	5 / 4.5	7.1/4	184.2	57	26
SJX	50004933Y649	10712599-001	5 / 4.5	9.7/8	244.5	57	26
SJX	50004933Y697	10712607-001	5 / 4.5	8.1/8	206.4	57	26
SJX	50004933Y705	10712608-001	5 / 4.5	7.3/4	196.9	57	26
SJX	50004933Y831	10712610-001	5 / 4.5	10	254	57	26
SJX	50004933Y841	10712613-001	5 / 4.5	7.721	196.1	57	26
SJX	50004933Y842	10712618-001	5 / 4.5	7.947	201.9	57	26
SJX	50004933Y843	10712621-001	5 / 4.5	7.752	196.9	57	26
SJX	50004933Y865	10712843-001	5 / 4.5	9.3/8	238.1	57	26
SJX	50004933Y888	10712844-001	5 / 4.5	7.1/2	190.5	57	26
SJX	50004935Y142	10111390-001	5 / 4.5	10.3/4	323.9	67	30
SJX	50004935Y143	10712851-001	5 / 4.5	11.3/4	323.9	67	30
SJX	50004935Y144	10111391-001	5 / 4.5	13.3/8	339.7	67	30
SJX	50004935Y345	10712856-001	5 / 4.5	12.3/4	323.9	67	30
SJX	50004935Y596	10712858-001	5 / 4.5	13.5/8	346.1	67	30
SJX	50004935Y649	10712861-001	5 / 4.5	9.7/8	250.9	67	30
SJX	50004935Y676	10712865-001	5 / 4.5	12.7/8	327.1	67	30
SJX	50004935Y690	10712868-001	5 / 4.5	14	355.6	67	30
SJX	50004935Y729	10712869-001	5 / 4.5	11.7/8	301.6	67	30
SJX	50004935Y831	10712870-001	5 / 4.5	10	254	67	30
SJX	50004935Y834	10712871-001	5 / 4.5	12.131	308.1	67	30
SJX	50004935Y837	10712872-001	5 / 4.5	13.885	352.7	67	30
SJX	50004935Y846	10712873-001	5 / 4.5	10.1/8	257.2	67	30
SJX	50004935Y856	10712874-001	5 / 4.5	13.1/2	342.9	67	30
SJX	50004935Y861	10712875-001	5 / 4.5	Contact NOV		67	30
SJX	50004935Y871	10712876-001	5 / 4.5	10.3/4	323.9	67	30

D-SJX Series

The D-SJX elevator is the heavy duty version of the SJX elevator, capable of handling doubles and triples up to 12 sTon / 10.9 Tonne.

Technical specifications D-SJX Series

Type	Part number	Oracle number	Load Rating [sTon/ Tonne]	Size [inch]	Size [mm]	Max. Weight [lbs]	Max. Weight [kg]
D-SJX	50004955Y119	10713145-001	12 / 11	3.1/2	88.9	79	36
D-SJX	50004955Y120	10713144-001	12 / 11	3.1/2	88.9	79	36
D-SJX	50004955Y121	10713143-001	12 / 11	4	101.6	79	36
D-SJX	50004955Y122	10713142-001	12 / 11	4.1/2	100.8	79	36
D-SJX	50004955Y123	10713141-001	12 / 11	5	127	79	36
D-SJX	50004955Y124	10713140-001	12 / 11	5.1/2	139.7	79	36
D-SJX	50004955Y177	10713139-001	12 / 11	4.1/8	104.8	79	36
D-SJX	50004955Y211	1071318-001	12 / 11	3.3/4	95.3	79	36
D-SJX	50004955Y213	10713137-001	12 / 11	4	101.6	79	36
D-SJX	50004955Y215	10713147-001	12 / 11	4.1/2	100.8	79	36
D-SJX	50004955Y219	10713136-001	12 / 11	5.1/4	133.4	79	36
D-SJX	50004955Y222	10713142-001	12 / 11	4.1/2	100.8	79	36
D-SJX	50004955Y354	10713133-001	12 / 11	4.3/4	120.7	79	36
D-SJX	50004955Y411	10713131-001	12 / 11	5.1/2	139.7	79	36
D-SJX	50004955Y466	10713129-001	12 / 11	4.7/8	123.8	79	36
D-SJX	50004955Y519	10713127-001	12 / 11	4.1/8	104.8	79	36
D-SJX	50004955Y548	10713126-001	12 / 11	4.1/4	108	79	36
D-SJX	50004955Y552	10713124-001	12 / 11	5	127	79	36
D-SJX	50004955Y554	10713123-001	12 / 11	4.1/2	100.8	79	36
D-SJX	50004955Y609	10713122-001	12 / 11	5.5/8	142.9	79	36
D-SJX	50004955Y667	10713121-001	12 / 11	6.5/8	168.3	79	36
D-SJX	50004955Y674	10713120-001	12 / 11	4.1/4	108	79	36
D-SJX	50004955Y763	10713119-001	12 / 11	3.7/8	102.3	79	36
D-SJX	50004955Y789	10713118-001	12 / 11	5.7/8	149.2	79	36
D-SJX	50004958Y188	10713347-001	12 / 11	7.1/2	190.5	89	40
D-SJX	50004958Y331	10713343-001	12 / 11	6.3/8	162	89	40
D-SJX	50004958Y334	10713345-001	12 / 11	8	203.2	89	40
D-SJX	50004958Y338	10713344-001	12 / 11	6.3/4	171.5	89	40
D-SJX	50004958Y347	10713342-001	12 / 11	8.1/4	209.6	89	40
D-SJX	50004958Y348	10713341-001	12 / 11	6.1/4	158.8	89	40
D-SJX	50004958Y349	10713340-001	12 / 11	6	152.4	89	40
D-SJX	50004958Y355	10713339-001	12 / 11	7.1/4	184.2	89	40
D-SJX	50004958Y372	10713338-001	12 / 11	7	177.8	89	40
D-SJX	50004958Y550	10713337-001	12 / 11	7.3/4	196.9	89	40
D-SJX	50004958Y564	10713366-001	12 / 11	9.1/4	235	89	40
D-SJX	50004958Y580	10713335-001	12 / 11	8.1/2	215.9	89	40
D-SJX	50004958Y610	10713159-001	12 / 11	8.1/8	206.4	89	40
D-SJX	50004958Y613	10713158-001	12 / 11	8.5/8	219.1	89	40
D-SJX	50004958Y678	10713156-001	12 / 11	5.1/2	139.7	89	40
D-SJX	50004958Y740	10713155-001	12 / 11	6.5/8	168.3	89	40
D-SJX	50004958Y765	10713154-001	12 / 11	6.1/2	165.1	89	40
D-SJX	50004958Y766	10713153-001	12 / 11	7.1/2	190.5	89	40

Size components DSJX

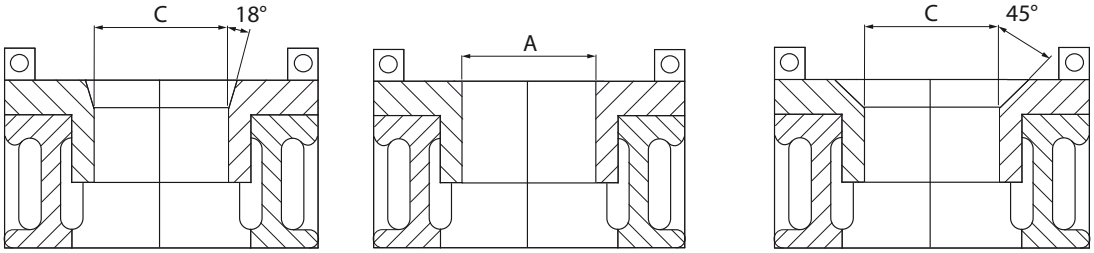

DSJX 12 sTon with drill pipe 18° insert bore chart

Bore Code	Center Bore C [inch]	Size [inch]	Basic elevator	New number Basic elevator	Part number Insert set	Oracle number Insert set
119	3.25/32	3.1/2 Reg, FH +Hydrill	50004955Y	10713146-001	50004948Y119	10731586-022
120	3.31/32	3.1/2 IF	50004955Y	10713146-001	50004948Y120	10731586-002
121	4.9/32	4 FH	50004955Y	10713146-001	50004948Y121	10731586-003
122	4.25/32	4 IF + 4.1/2 Reg + 4.1/2 FH	50004955Y	10713146-001	50004948Y122	10731586-004
123	5.1/4	4.1/2 IF + 5 EIU	50004955Y	10713146-001	50004948Y123	10731586-005
124	5.13/16	5.1/2 REG + FH	50004955Y	10713146-001	50004948Y124	10731586-006
789	6.1/8	5.7/8 IEU	50004955Y	10713146-001	50004948Y789	10731586-021
678	6.233	5.1/2 IF + IEU	50004958Y	10713348-001	50004959Y678	10141990-015
740	7.031	6.5/8 IEU	50004958Y	10713348-001	50004959Y740	10141990-016

DSJX 12 sTon with drill collars with zip lift recess bore chart

Bore Code	Top Bore A [inch]	Size [inch]	Basic elevator	New number Basic elevator	Part number Insert set	Oracle number Insert set
177	3.11/16	4.1/8 DC Zip	50004955Y	10713146-001	50004948Y177	10731586-007
674	3.13/16	4.1/4 DC Zip	50004955Y	10713146-001	50004948Y674	10731586-019
554	4.1/16	4.1/2 DC Zip	50004955Y	10713146-001	50004948Y554	10731586-016
466	4.3/8	4.7/8 DC Zip	50004955Y	10713146-001	50004948Y466	10731586-024
609	5	5.5/8 DC Zip	50004955Y	10713146-001	50004948Y609	10731586-017
667	6	6.5/8 DC Zip	50004955Y	10713146-001	50004948Y667	10731586-018
188	6.3/4	7.1/2 DC Zip	50004958Y	10713348-001	50004959Y188	10141991-001
610	7.3/8	8.1/8 DC Zip	50004958Y	10713348-001	50004959Y610	10141990-013
613	7.7/8	8.5/8 DC Zip	50004958Y	10713348-001	50004959Y613	10141990-014
564	8.3/8	91/4 DC Zip	50004958Y	10713348-001	50004959Y564	10141990-011

DSJX 12 sTon with plain drill collars with lift plugs bore chart

Bore Code	Top Bore A [inch]	Size [inch]	Basic elevator	New number Basic elevator	Part number Insert set	Oracle number Insert set
211	3.29/32	3.3/4 DC	50004955Y	10713146-001	50004948Y211	10731856-023
763	4.1/32	3.7/8 DC	50004955Y	10713146-001	50004948Y763	10731586-020
213	4.5/32	4 DC	50004955Y	10713146-001	50004948Y213	10731586-008
519	4.9/32	4.1/8 DC	50004955Y	10713146-001	50004948Y519	10731586-025
548	4.13/32	4.1/4 DC	50004955Y	10713146-001	50004948Y548	10731586-014
215	4.21/32	4.1/2 DC	50004955Y	10713146-001	50004948Y215	10731586-009
354	4.15/16	4.3/4 DC	50004955Y	10713146-001	50004948Y354	10731586-012
552	5.3/16	5 DC	50004955Y	10713146-001	50004948Y552	10731586-015

Bore Code	Top Bore A [inch]	Size [inch]	Basic elevator	New number Basic elevator	Part number Insert set	Oracle number Insert set
219	5.7/16	5.1/4 DC	50004955Y	10713146-001	50004948Y219	10731586-010
411	5.11/16	5.1/2 DC	50004955Y	10713146-001	50004948Y411	10731586-013
222	5.31/32	5.3/4 DC	50004955Y	10713146-001	50004948Y222	10731586-011
349	6.7/32	6 DC	50004958Y	10713348-001	50004959Y349	10141990-007
348	6.15/32	6.1/4 DC	50004958Y	10713348-001	50004959Y348	10141990-006
331	6.19/32	6.3/8 DC	50004958Y	10713348-001	50004959Y331	10141990-002
765	6.23/32	6.1/2 DC	50004958Y	10713348-001	50004959Y765	10141990-017
338	7	6.3/4 DC	50004958Y	10713348-001	50004959Y338	10141990-004
372	7.1/4	7 DC	50004958Y	10713348-001	50004959Y372	10141990-009
355	7.1/2	7.1/4 DC	50004958Y	10713348-001	50004959Y355	10141990-008
766	7.3/4	7.1/2 DC	50004958Y	10713348-001	50004959Y766	10141990-018
550	8	7.3/4 DC	50004958Y	10713348-001	50004959Y550	10141990-010
334	8.1/4	8 DC	50004958Y	10713348-001	50004959Y334	10141990-003
347	8.1/2	8.1/4 DC	50004958Y	10713348-001	50004959Y347	10141990-005
580	8.25/32	8.1/2 DC	50004958Y	10713348-001	50004959Y580	10141990-012

SBX7

The SBX7 is a solid body elevator with a manual operated single door, which is equipped to handle risers with square shouldered couplings/45° tool joints. Opening of the SBX7 door is hand operated, it can be done by removing either the right or left hinge pin.

The SBX7 elevator is a solid body elevator with one manually operated door for high loads up to 1,250 sTon / 1,133 Tonne. The elevator is suitable in combination with the standard BX7 bushings and dedicated SBX7 bushings. This elevator is designed for (ultra-) deep water drilling rigs.

Technical specifications SBX7 Elevator

Type	Part number	Oracle number	Load Rating [sTon/Tonne]	Size [inch]	Size [mm]	Max. Weight [lbs]	Max. Weight [kg]
SBX7	50001270Y	10140621-001	1,250 / 1,133	5.1/2 -9.5/8	139.7 - 244.5	4195	1903

Size components SBX7 elevator

SBX7 Casing Bushing 1,250 sTon / 1,134 Tonne			
Size [inch]	**Part number**	**Oracle number**	**Load Rating [sTon/Tonne]**
6.5/8	50000314Y135	10183719-001	1,250 / 1,134
7	50000314Y136	10183720-001	1,250 / 1,134
7.5/8	50000314Y137	10183721-001	1,250 / 1,134
7.3/4	50000314Y705	10183724-001	1,250 / 1,134
8	50000314Y757	10112880-001	1,250 / 1,134
8.5/8	50000314Y139	10183722-001	1,250 / 1,134
8.3/4	50000314Y804	10183725-001	1,250 / 1,134
9.1/8	50000314Y883	10183726-001	1,250 / 1,134
9.5/8	50000314Y141	10183723-001	1,250 / 1,134
9.7/8	50000314Y142	Contact NOV	1,250 / 1,134
SBX7 Drill pipe 18° Bushing 750 sTon / 680 Tonne			
Size [inch]	**Part number**	**Oracle number**	**Load Rating [sTon/Tonne]**
5.1/2 IEU	50000312Y780	10731576-001	750 / 680
5.1/2 IF	50000312Y781	10112877-001	750 / 680

SBX7 Drill pipe 18° Bushing 1,000 sTon / 907 Tonne			
Size [inch]	**Part number**	**Oracle number**	**Load Rating [sTon/Tonne]**
5.7/8 with 6 upset	50000312Y789	10112879-001	1,000 / 907
6.5/8 IEU	50000312Y782	10112878-001	1,000 / 907
6.5/8 , with 7.1/8 upset	50000312Y823	10704616-001	1,000 / 907
SBX7 Landing string 45° Bushings			
Size [inch]	**Part number**	**Oracle number**	**Load Rating [sTon/Tonne]**
6.5/8	50000314Y832	10490423-013	1,250 / 1,134
6.5/8 with radius 1.5	50000314Y870	10702224-001	1,250 / 1,134
SBX7 Special square shoulder Bushing			
Size [inch]	**Part number**	**Oracle number**	**Load Rating [sTon/Tonne]**
8	50000314Y884	10490423-016	1,250 / 1,134
8.3/4	50000314Y783	10702228-001	1,250 / 1,134
8.5/8	50000314Y784	10490423-010	1,250 / 1,134
9.5/8	50000314Y788	10112881-001	1,250 / 1,134
9.28 15° tapered	50000314Y902	10702225-001	1,250 / 1,134
9.4	50000314Y893	10490423-017	1,250 / 1,134
SBX7 Special square shoulder Bushing			
Size [inch]	**Part number**	**Oracle number**	**Load Rating [sTon/Tonne]**
8	50000314Y884	10490423-016	1,250 / 1,134
8.3/4	50000314Y783	10702228-001	1,250 / 1,134

SJH SERIES MANUAL ELEVATOR

The SJH horizontal pick up elevator is designed to pick up tubulars lying flat on a surface without having to lift the tubulars prior to closing the elevator. The elevator is capable of lifting drill pipe, recessed/zip lift drill collars and casing. It will handle single joints of pipe straight from cantilever to off-line stand building systems.

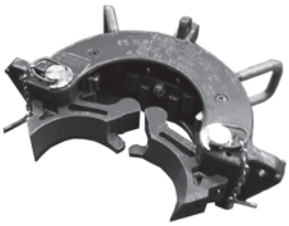

Technical specifications

Type	Part number*	Oracle number	Load Rating [sTon/ Tonne]	Size [inch]	Size range [mm]	Pipe type	Part number Jaws*	Appr. weight [lbs / kg] (incl jaws)
SJH	50003135Y*	10108036-001	5 / 4.5	2.3/8 – 4.1/2	60.3 - 114.3	Tbg & Dp	50003148Y*	100 / 45
SJH	50003155Y*	10108043-001	5 / 4.5	4.1/2 – 7.5/8	114.3 - 193.7	Tbg & Dp	50003189Y*	111 / 51
SJH	50003175Y*	Contact NOV	5 / 4.5	7 – 10.3/4	177.8 - 273.1	Csg	50003150Y*	132 / 60

*Refer to Jaw Bore code # in the following tables.

Size components Jaws SJH 2.3/8" – 4.1/2" pn 50003135Y* / 10108036-001

		90°	5°	12°
Size Tubing	**Type upset**	**Bode code**	**Bode code**	**Bode code**
2.3/8"	Plain	158	5238	12238
	Upset	159		
2.7/8"	Plain	160	5278	12278
	Upset	161		
3.1/2"	Plain	162	5312	12312
	Upset	163		
4"	Plain	164	5400	12400
	Upset	165		
4.1/2"	Plain	129	5412	12412
	Upset	167		

		18°
Size Drill Pipe	**Type upset**	**Bode code**
2.3/8"	IU	-
	EU	116
2.7/8"	IU	117
	EU	118
3.1/2"	IU	119
	EU	120
4"	IU	121
	EU	122
4.1/2"	EU	123

Jaws SJH 4.1/2" – 7.5/8" pn 50003155Y* / 10108043-001

Size Casing	90° Bode code	5° Bore code
4.1/2"	129	5412
5"	131	5500
5.1/2"	132	5512
5.3/4"	133	-
6"	134	-
6.5/8"	135	5658
7"	136	5700
7.5/8"	137	5758
Size Drill Pipe	**Type upset**	**18° Bode code**
4.1/2"	IU	122
	EU	123
5"	IU	123
5.1/2"	IEU	124
5.7/8" (6" upset)	IEU	789
6.5/8"	IEU	782

Jaws SJH 7" – 10.3/4" pn 50003175Y* / Contact NOV

Size Casing	90° Bode code	5° Bode code
4.1/2"	129	na
5"	131	na
5.1/2"	132	na
7"	136	5700
7.5/8"	137	5758
8.5/8"	139	5858
9"	140	5900
9.5/8"	141	5958
10.3/4"	142	51034

DC DOLLY

Part Number	Size [inch]	Rating [sTON / TONNE]
18°type		
31189Y1	4.1/2" IF & 5" IEU	150 / 136
31189Y7	3.1/2" IF, Reg & FH	150 / 136
31189Y16	2.7/8" Plain	150 / 136
Collar type		
31189Y3	4.1/2" IF & 5" IEU	150 / 136
31189Y5	4" IF & 4.1/2" Reg & FH	150 / 136
31189Y9	4 FH	150 / 136
31189Y12	3.1/2" IF & 5" IEU	150 / 136
31189Y15	6.5/8" EU	150 / 136
31189Y10	5.1/2" IEU -18	150 / 136
31189Y18	5.7/8" IEU -18	150 / 136

Lubrication and maintenance

Recommended inspections

NOTE: The owner and user together with the manufacturer should jointly develop and update inspection, maintenance, repair and remanufacture procedures consistent with equipment application, loading, work environment, usage and other operational conditions.These factors may change from time to time as a result of new technology, equipment history, product improvements, new maintenance techniques and changes in service conditions. Alternatively, NOV recommends using the Periodic inspection and maintenance Categories and Frequencies as mentioned in API RP8b Table 1. Long-term planning shall be adjusted in order not to interfere unnecessarily with the running operations.

Safety

WARNING: Elevators which have experienced wear beyond established wear criteria set by OEM, or are found to have cracks must be replaced or repaired by a NOV authorized repair facility.

WARNING: Only original NOV parts must be used. Elevators are produced from cast alloy heat treated steel and must not be welded in the field. Improper welding can cause cracks and brittleness in heat-affected areas which can result in dramatic weakening of the part and possible failure. Repairs involving welding and/or machining should be performed only by an NOV authorized repair facility. Using an Elevator that has been improperly welded or repaired is dangerous.

WARNING: No grease or pipe dope should be used for lubricating the inserts and insert slots as this will reduce the friction coefficient resulting in higher loads on the slip toe and thus higher stress.

WARNING: NOV elevators are load tested after manufacture or repair. Load testing is mandatory on elevators which have not been load tested before. Load testing is required on elevators which have been overloaded, for example jarring operations or operations that have induced elevators to high accelerations or high impact loads.

WARNING: Any maintenance to the elevator shall be carried out off the well center unless it can be performed in a safe manner, consider a distance of 1m/3ft from the elevator as the Yellow Zone (unsafe but accessible when needed)

WARNING: Practice safety in all performances of operation and maintenance and use approved safety methods, materials and tools. Keep hands away from any pinch point or undesignated areas; use provided handles for operating the elevator.

NOTE: To reduce the chance of inserts seizing in the insert slots, NOV recommends to remove the inserts after each job and coat the insert slot with a corrosion preventive ISO-L-REE according to ISO 6743-8:1987.

Recommended grease

Use extreme pressure, lithium based, multi purpose grease classification according to ISO 6743-9:2003 Lubricants, industrial oil and related products (class L) - Classification - Part 9: Family X (greases) or equivalent.

Minimum requirements:

Operating temperature range	Grease type
Temp. above -20° C	EP2: L-XBAFB, NLGI grade 1 or 2
Temp. below -20°C	EP1: L-XCAFB, NLGI grade 1 or 2

Recommended slot coating

NOV recommends to coat the insert slot with a corrosion preventive ISO-L-REE according to ISO 6743-8:1987

Inspection

Daily Inspection (when tool is in use)

Category I.

This category involves observing the equipment during operation for indications of inadequate performance. When in use, equipment shall be visually inspected on a daily basis for cracks, loose fits or connections, elongation of parts, and other signs of wear, corrosion or overloading. Any equipment found to show cracks, excessive wear, etc., shall be removed from service for further examination. The equipment shall be visually inspected by a person knowledgeable in that equipment and its function.

Category II.

This is Category I inspection plus further inspection for corrosion, deformation, loose or missing components, deterioration, proper lubrication, visible external cracks, and adjustment.

Procedure

Observe and repair when needed (cat I + II)

Observe the functioning of the mechanism of the elevator as follows:	❑ OK
1) Open and close the elevator a number of times to check the correct functionality. Check that both sides of the elevator work flawlessly without interference	❑ OK
2) Check the proper functioning of the verification pins for a number of times	❑ OK
3) Observe equipment during operations for indications of inadequate performance	❑ OK
Additional inspection for Y series elevators	
4) Check for proper slip movement by pressing the slip downward. The slips should come up upon release assuring proper condition of the slip springs	❑ OK
5) Check that all 4 rubber bushings are installed under the slip setting ring. Replace if needed.	❑ OK
Additional inspection for SJX/DSJX series elevators	
6) Check for proper working, adjusting and retention of the ball nose spring plunger(s)	❑ OK

Procedure

Visually inspect and repair when needed (cat I + II)

1. Check for worn and damaged parts	❑ OK
2. Check for loose and missing parts	❑ OK
3. Check for cracks	❑ OK
4. Check for corrosion	❑ OK

5. Check the condition of the lock pin keys	❑ OK
6. Check the condition of hinge pins	❑ OK
7. Check the link adapters	❑ OK
8. Check the adapter pins	❑ OK
9. Check condition of springs when present	❑ OK
10.Check for wear of the lock key pins by checking the vertical play between body halfs	❑ OK
11.Check state of lubrication	❑ OK
12.Check the proper locking of:	
• Bolts and nuts	❑ OK
• Safety chains/wires	❑ OK
• Slotted nuts & cotter pins	❑ OK
• Lock tabs & lock bars	❑ OK
• Roll pins and dowel pins	❑ OK
• Snap rings	❑ OK
• Cotter pins	❑ OK
• Locking rings	❑ OK
• Lock wire	❑ OK
Additional inspection for Y series elevators	
• Brush inserts clean and check for wear and missing teeth	❑ OK
• Check slip setting ring for spreading and wear in the seating area	❑ OK
Additional inspection for SJX/DSJX series elevator	
• Check for presence and proper retention of the lock pin screw(s)	❑ OK

6 Monthly Inspection (when tool is in use)

Category III

This is Category II inspection plus further inspection, which should include NDT of critical areas and may involve some disassembly to access specific components and to identify wear that exceeds the manufacturer's allowable tolerances.

Procedure 6 Monthly Inspection

Procedure on rig (cat III)

Disassemble the following parts of the elevator for dimensional check according to Wear Data drawings (see Chapter Drawings):

- Hinge pins
- Hinge pin holes
- Link ear height

MPI the following critical areas as per MPI-procedure:

- Link ears

NOTE: For measuring the inside diameter of the elevator see Chapter Drawings: Wedge and Measuring Instructions

Inspection except SJH/SJX/DSJX series elevators
1. Try to open the latch by prying the latch between body and latch with a steel bar or screw driver, the latch lock must prevent the latch from being opened
Wedge elevator
2. Check that latch is not forced outwards when elevator is wedged open; for wedge and measuring instruction of the inside diameter see chapter Drawings
3. Check there is clearance between latch and door lug at the top
4. Check latch and lug faces make contact and are parallel
5. Check that the lock hook has clearance all around the lug pin
Hang elevator in open position tilted forward
6. Check for correct fixation of the top of the latch spring stop pin

Annual (1 year) Inspection (when tool is in use)

Category IV

This is Category III inspection plus further inspection for which the equipment is disassembled to the extent necessary to conduct NDT of all primary-load-carrying components as defined by manufacturer. Equipment shall be:

Disassembled in a suitably-equipped facility to the extent necessary to permit full inspection of all primary-load-carrying components and other components that are critical to the equipment & Inspected for excessive wear, cracks, flaws and deformations.

Corrections shall be made in accordance with the manufacturer's recommendations. Prior to Category III and Category IV inspections, all foreign material such as dirt, paint, grease, oil, scale, etc. shall be removed from the concerned parts by a suitable method (e.g. paint-stripping, steam-cleaning, grit-blasting).

Procedure Annual (1 year) Inspection

Annual (1 year)* Inspection (cat IV)
MPI elevator load bearing components critical areas as per MPI-procedure, using the Critical Area Drawings. Major load bearing components are: • Hinge/latch pins • Lock key pin (D)SJX • Latches • Elevator body (halves) • Door • Link adapters (considered 100% critical) • Adapter pins (considered 100% critical) • Inserts (considered 100% critical)

* Depending on frequency and load pattern of strings handled with the elevator drill pipe inserts, it is recommended to decrease the time intervals for MPI inspection for drill pipe bushings to be carried out on a 3 monthly basis.

Magnetic Particle Inspection

The NOV critical area drawings will indicate which areas are considered as to be critical or non-critical. **In general; for load bearing components, in case no critical area drawing exists, the complete component is considered critical.**

Carry out MPI according to ASTM E709 or ASME BPVC sub section A, article 7 and subsection B, article 25; determine the type of defects and the degree by comparing defects to ASTM E125 reference photographs to the acceptance criteria.

Only cracks may develop and as such need to be reviewed. All other indication types have been addressed by the manufacturer during production. As such, the elevator has left the factory with indication (if at all) which were deemed acceptable. All cracks which have developed in service are relevant and need to be examined.

Machined surfaces shall be examined by the wet fluorecent method, other surfaces shall be examined by wet or dry method.

NOV elevators should be MPI examined according to the maintenance procedures. The areas subject to inspection shall be inspected according to the procedures developed by the user or, alternatively, as per API RP 8b.

Evaluations of indications

Relevant indications: Only those indications with major dimensions greater than 1/16 Inch (2 mm) and associated with a surface rupture shall be considered relevant. Relevant indications are indications that result from discontinuities within the test part.

NOTE: If any relevant indications are found, contact NOV to determine the next course of action. Preferably an inspection report (with photograph or sketch) detailing the serial number of the equipment and the type, length and location of the indication should be presented. NOV will be able to advise the proper and most efficient repair.

Qualifications and certification

All personnel performing and interpreting MPI shall be qualified in accordance with the guidelines of ASNT SNT-TC-1A (latest edition) or an equivalent standard and shall be trained in the use of the reference photographs and the interpretation of the MPI with regard to the acceptance criteria and ASTM E125 reference photographs.

Criteria for API 8A & 8C PSL 1 equipment; castings

Type	Discontinuity description	Max. degree critical areas	Max. degree non-critical areas
I	Hot tears, cracks	None	Degree I
II	Shrinkage	Degree II	Degree II
III	Inclusions	Degree II	Degree II
IV	Internal chills and chaplets	Degree I	Degree I
V	Porosity	Degree I	Degree II

Criteria for API 8C PSL 2 equipment; castings

Type	Discontinuity description	Max. degree critical areas	Max. degree non-critical areas
I	Hot tears, cracks	None	None
II	Shrinkage	None	Degree I
III	Inclusions	Degree I	Degree II
IV	Internal chills and chaplets	None	Degree I
V	Porosity	Degree I	Degree II

Grey area NOT applicable for MPI for equipment in service.

Criteria for API 8A & 8C equipment; forgings (SBX7)

The following acceptance criteria shall apply for surface NDE of wrought materials:

- no relevant indications with a major dimension equal to or greater than 5 mm (3/16”)
- no more than ten relevant indications in any continuous 40 cm2 (6 in2) area
- no more than three relevant indications in a line separated by less than 2 mm (1/16”) edge-to-edge
- no relevant indications in pressure-sealing areas, in the root area of rotary threads or in the stress-relief features of threaded joints

Criteria for API 8A & 8C equipment; weldings and castings

All primary load carrying and pressure containing components shall be examined:

- no relevant, linear indications
- no rounded indications with a dimension greater than 4mm (1/8”), for welds whose depth is 17mm (5/8”) or less
- no rounded indications with a major indication greater than 5mm (3/16”) for welds whose depth is greater than 17mm (5/8”)
- no more than three relevant indications in a line separated by less than 2mm (1/16”) edge to edge

Lubrication

Daily lubrication (elevator in use)

NOTE: Lubricate regularly during usage and storage to prevent corrosion from attacking any part of the elevators operating mechanism.

Routine lubrication should be completed prior to use.

1. Grease hinge, latch and latch lock pin.	❑ OK
2. Grease hinge and latch pin through grease nipples	❑ OK
3. Grease underside of link ears.	❑ OK
4. Grease top bore, taper surface and/or back of slips	❑ OK
5. Grease springs.	❑ OK
6. Grease link retainer fasteners.	❑ OK

Additional daily lubrication SJH (elevator in use)

Additional daily Lubrication (when in use)

1. Apply grease in the grease nipples of the jaws. Grease should visible come out.	❑ OK
2. Grease the machined surface of the latch and jaw + positioner	❑ OK

Additional daily lubrication SBX7 (elevator in use)

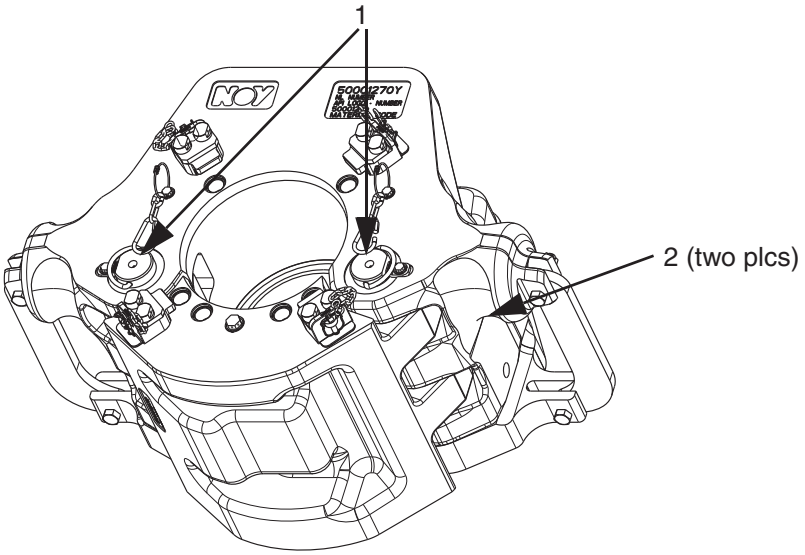

Procedure

Daily Lubrication.
Apply prescribed grease to all grease points until grease is coming out of the bores

1. Grease hinge pins through the grease nipples (1)	❑ OK
2. Grease contact surfaces links (2)	❑ OK
3. Grease back of bushings and the elevator bore and load-shoulder.	❑ OK
4. Grease all bushing backs manually.	❑ OK

Drill collar with zip-lift recess bore

The bore of new elevators is according the following table.

Drill collar O.D. range	Top bore	Bottom bore	Bevel on top bore
4” to 4.5/8”	O.D. minus 5/16”	O.D. plus 1/8”	1/16”
4.3/4” to 5.5/8”	O.D. minus 3/8”	O.D. plus 1/8”	1/16”
5.3/4” to 6.5/8”	O.D. minus 1/2”	O.D. plus 1/8”	1/16”
6.3/4” to 8.5/8”	O.D. minus 9/16”	O.D. plus 1/8”	3/32”
8.3/4” and larger	O.D. minus 5/8”	O.D. plus 1/8”	1/8”

Table 1

Bores for drill collar size	Maximum wear
<= 5.5/8”	New bore + 1/32”
> 5.5/8”	New bore + 1/16”

Table 2

Example:

1. A new bore 4’ drill collar with zip lift recess has a 4” minus 5/16” (see table 1) = **3.11/16”** top bore maximum.
2. The maximum allowable size is **3.11/16”** plus **1/32”** (see table 2) = **3.23/32”.**

NOTE: See chapter “Drawings” for tables of maximum diameters

How to calculate collar type bore for casing and tubing

Nominal Casing or Tubing Size, D [inch]	Formula for New Top Bore [inch / mm]
D < 4.1/2 “	1.001 x (D x 25.4) + 1.88 mm / (1.001 x D + 0.074”)
4 ½ “ <= D < 9 .5/8 in	1.0125 x (D x 25.4) + 1.22 mm / (1.0125 x D + 0.048”)
9.5/8 in <= D < 12.7/8 “	1.0125 x (D x 25.4) + 0.89 mm / (1.0125 x D + 0.035”)
12.7/8 “ <= D <= 20 in	1.0125 x (D x 25.4) + 0.56 mm / (1.0125 x D + 0.022”)
20 in < D < 42 “	1.010 x (D x 25.4) + 1.90 mm / (1.010 x D + 0.075”)
42 “ <= D	1.010 x (D x 25.4) + 3.18 mm / (1.010 x D + 0.125”)

Tool joint wear data drill-pipe

Procedure

1. Determine the center bore diameter of the bushing in inches (size **C**)
2. The maximum wear on the diameter of the center bore: Nominal size + 0.25 inch
3. In the table, follow the line corresponding with the rating of the elevator (in short tons)
4. On the left hand side, read out the minimum required tool joint diameter (Y) in inches that can be handled safely with the elevator.

As soon as the tool joint diameter falls below the corresponding rating line, the bushing or the pipe must be changed.

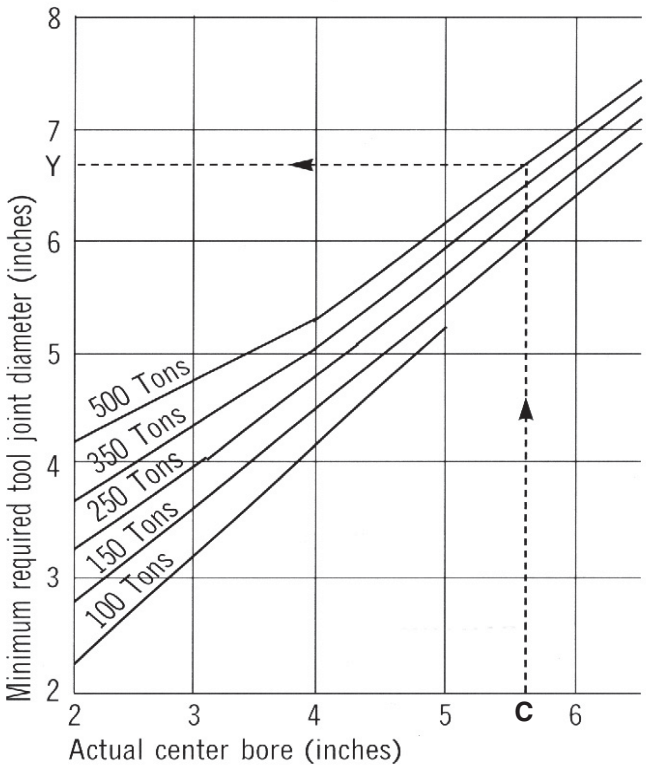

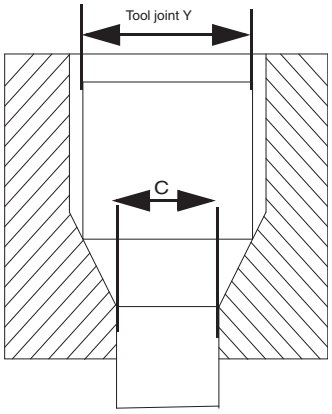

For more information see WD-000 to WD-011 and 15316-5

Wear criteria general notes

WARNING: The inspection criteria and maximum wear allowances contained in this (these) documents are only valid when the related equipment is in otherwise condition, has not been misused and does not have excessive wear, cracks or other defects, or previous weld repair. These inspection criteria and maximum wear allowances apply only to certain critical components and, as such, cannot on their own determine the overall condition of the equipment and its suitability for continued use

General dimensions

CAUTION: Ensure dimensions and requirements are according to API RP-7G

NOTE: For measuring top and bottom bores of the elevator, follow instructions in the Wedge and Bore Measuring Instructions (see chapter Drawings).

Casing & tubing

CAUTION: Wear data are applicable for lifting casing & tubing with regular coupling with dimensions and tolerances according to API 5-CT

Y, G, X, A, SJL, SPL-series wear data

NOTE: For wear data TMA elevator see WD-050, wear data is the same as TA elevator.

See chapter “Drawings”.

Wear data SJX

Hole clearance hinge pins max. 0,032” (0,81mm).

Wear data DSJX

Drill collar with bore

The bore of new elevators is according the following table.

Drill collar O.D. range	Top bore	Bottom bore	Bevel on top bore
4” to 4.5/8”	O.D. minus 5/16”	O.D. plus 1/8”	1/16”
4.3/4” to 5.5/8”	O.D. minus 3/8”	O.D. plus 1/8”	1/16”
5.3/4” to 6.5/8”	O.D. minus 1/2”	O.D. plus 1/8”	1/16”
6.3/4” to 8.5/8”	O.D. minus 9/16”	O.D. plus 1/8”	3/32”
8.3/4” and larger	O.D. minus 5/8”	O.D. plus 1/8”	1/8”

Wear drill collar

Bores for drill collar size	Maximum wear
<= 5.5/8”	New bore + 1/32”
> 5.5/8”	New bore + 1/16”

Calculate wear drill collar

Example:

1. A new bore 4’ drill collar has a 4” minus 5/16” (see table 1) = **3.11/16”** top bore maximum.
2. The maximum allowable size is **3.11/16”** plus **1/32”** (see table 2) = **3.23/32”.**

NOTE: See chapter “Drawings” for tables of maximum diameters

Wear casing / tubing

CAUTION: Wear data are applicable for lifting casing & tubing with regular coupling with dimensions and tolerances according to API 5-CT

Calculate casing /tubing collar type bore wear

Nom. size D	Max. worn bore	
D < 4.1/2” (114mm)	nom. D x 1.001 + 0.135”	(nom. D x 1.001 + 3.43mm)
4.1/2” (114mm) < D < 12.7/8” (327mm)	nom. D x 1.0175 + 0.080”	(nom. D x 1.0175 + 2.03mm)
12.7/8” (327mm) < D < 20” (508mm)	nom. D x 1.0175 + 0.055”	(nom. D x 1.0175 + 1.40mm)
20” (508mm) < D < 42” (1.066mm)	nom. D x 1.0125 + 0.156”	(nom. D x 1.0125 + 3.96mm)
42” (1.066mm) < D	nom. D x 1.010 + 0.3”	(nom. D x 1.010 + 7.62mm)

Wear data DSJX hinge pins

Hole clearance hinge pins max. 0,032” (0.81mm).

NOTE: Only a NOV authorized repair facility is allowed to remanufacture elevators which have indications outside the acceptance criteria.

SJX/DSJX functional check verification pin

The purpose of the installed verification pin is to prevent the hinge pin from rotating and to keep it in its locked position, it also verifies that the hinge pin is seated in the correct position. The ball nose spring detent plunger holds the hinge pin in the locked position, the verification pin prevents the hinge pin from rotating.

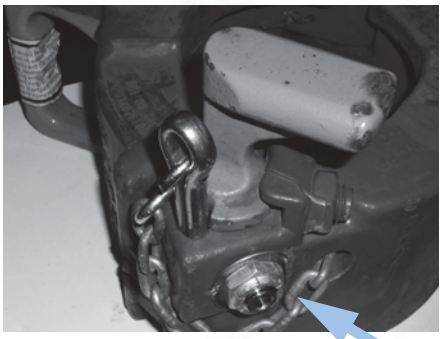

Ball nose spring detent plunger

Figure 1: Hinge pin closed and locked. When verification pin inserted, rotation should be prevented

Figure 2: Try to rotate hinge pin. Verification pin inserted. Lock keypin can still rotate. Pin is inactive as a secondary retention device.

Procedure

1. Close and lock SJX/DSJX elevator (figure 1)
2. Try to rotate the hinge pin
3. If rotation is possible, remove the elevator from service and check dimensions of the verification pin (figure 2).
4. Figure 3: The outside pin diameter should be 1/2”. If the pin is 3/8”, it is an old style pin and it should be replaced with a new style pin. Upgrade lanyard kits are availabe with part number 10850208-001/002/003

Verification pin with secondary retension

Wear data/criteria SBX7

Repair data

NOTE: In case the guidelines given in this chapter, conflict with the guidelines as set out in the NOV Repair manual, the guidelines set out in the NOV Repair manual shall prevail.

The wear data as given in the table(s) are for accepting the equipment in the field. The criteria that determine if equipment needs to be repaired are more stringent. After repair, the equipment must have wear allowance. Therefore on a repaired tool the Hinge & Latch Pin to Bore clearance should generally not exceed 50% of the maximum wear allowance.

Pin wear data

Allowed repair clearance Hinge & Latch pins. Max 0.023”

Allowed in-service clearance Hinge & Latch pins Max 0.045”

Allowed in-service clearance Lever & Bracket pins Max 0.015”

Allowed in-service clearance Bushing Position pins & Bushings (Inserts) Max 0.300”

Wear data link ear

Detail EAR

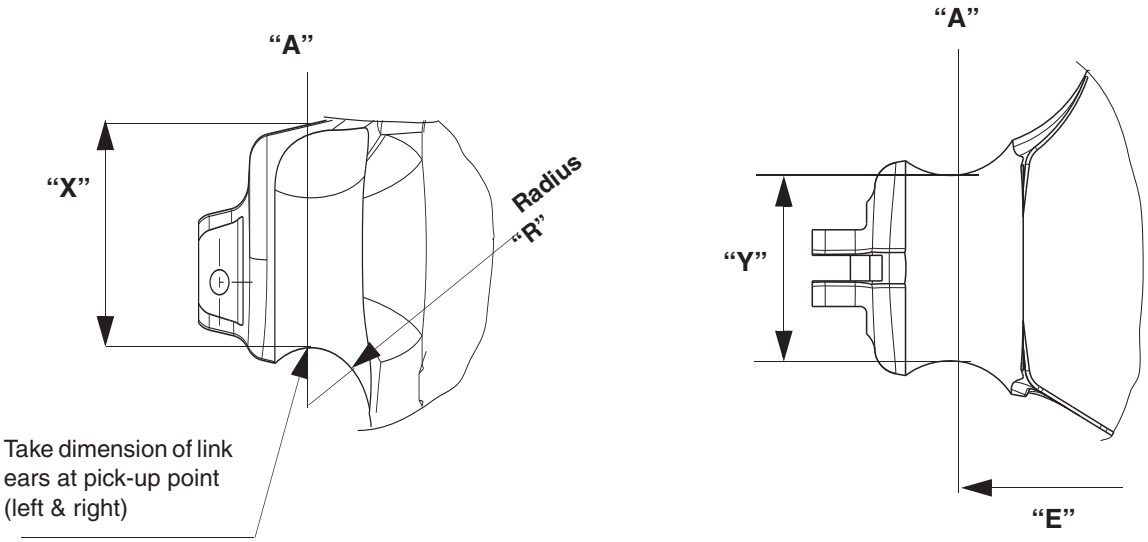

Dimension (inch)	SBX7
“X” min. worn	7.605
“E” Refence	± 38.25
“R”	2.875

YT, MYT, HYT wear data Setting Ring

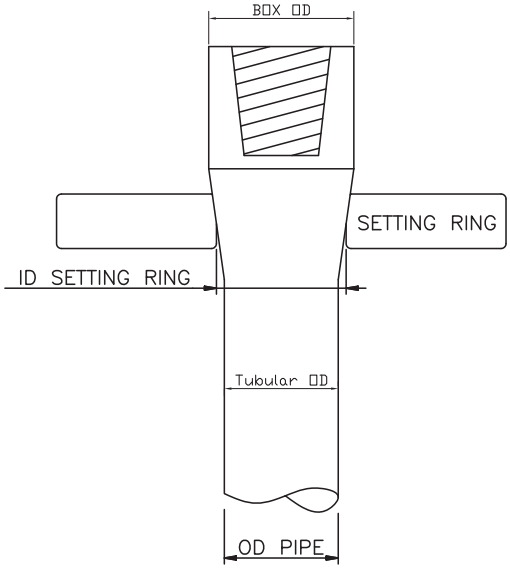

Max. setting ring ID = BOX OD – 0.25”

Installation and commissioning

Installing the elevators

WARNING: Lift the elevator by the link ears only and never use other points to lift.

NOTE: An elevator balancing strap may be used to adjust the tilt of the elevator. In general, it is desirable to have the handles pointing downward when open, so that the operator is in effect, lifting the elevator when closing.

All link ear type elevators (SBX, G, Y, X & A-series)

Procedure

- Lift the elevator to drill floor by using a two-legged sling or chain around the link ears. Make sure the link block retainer bolts are installed and secured when lifting.
- Place the elevator on the drill floor as close as possible to well center.
- Open the link blocks by removing the lower link block bolt assembly.
- Push the links in position around the elevator ears and close the link blocks
- Install the link block bolt and slotted nut.
- Secure the nut with a new cotter pin.

SJL/SPL type elevators

Procedure

- Connect a swivel suspension assembly to the ears of the elevator by use of shackles.
- Connect the swivel suspension assembly to the tugger line on the throat of the hook.

SJX (in combination with CRT)

Procedure

- To install the SJX-elevator, use the safety lines underneath the CRT
- Suspend the SJX using proper sized shackles
- Ensure the shackles have sufficient freedom of movement

SJX as a stand alone elevator

Procedure

- To install the SJX-elevator, use a tugger line with a 2-way lifting sling
- Suspend the SJX using proper sized green pin shackles
- Ensure the shackles have sufficient freedom of movement

SJH type elevator

Procedure

- To install the SJH-elevator, use a tugger line with a 2-way lifting sling
- Use a separate balancing strap for the center shackle

DSJX as a stand alone elevator

Procedure

- To install the DSJX-elevator, use a tugger line with a 2-way lifting sling p/n 50001105.
- Suspend the DSJX using proper sized green pin shackles (see dwg 50001105).
- Ensure the shackles have sufficient freedom of movement.
- Maximum tilt angle lifting sling for both legs is 25° from vertical as shown on drawing.
- Safe Working Load (SWL) is 12 sTon (10.9 Tonne).

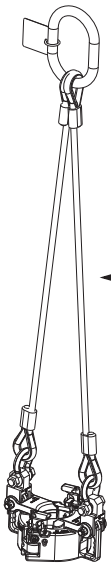

Installing the balancing strap (p/n 15320) for Y, G, A series

To reduce the chance the elevator tips over and help the operator to keep the elevator in the right position, a balancing strap can be installed.

Cross-over list SMX

When using 6-9" and or 9 1/8-13 3/8" check capacity links

"Old" Frame Number	Capacity	"New" SMX Frame Number	Capacity Ton	SMX Size Range	SMX suitable for Link sizes
31239Y 5.5 - 5.75"	150 sTon	50006430Y	150	3.1/2 - 5.3/4"	fits 250 & 350 sTon
33809Y	100 sTon	50006430Y	150	3.1/2 - 5.3/4"	fits 250 & 350 sTon
33854Y	100 sTon	50006430Y	150	3.1/2 - 5.3/4"	fits 250 & 350 sTon
31239Y 6 - 8.625"	150 sTon	50006400Y	150	**6 - 9"**	**fits 250 & 350 sTon**
33950Y 8.875 - 9"	150 sTon	50006400Y	150	**6 - 9"**	**fits 250 & 350 sTon**
		Alternative when user wants to hang off 500 sTon links			
		50006426Y	250	6 thru 9"	fits 250, 350 & **500** sTon
71273Y	250 sTon	50006426Y	250	6 thru 9"	fits 250, 350 & 500 sTon
71274Y	250 sTon	50006426Y	250	6 thru 9"	fits 250, 350 & 500 sTon
33950Y 9.125 - 10.75"	150 sTon	50006455Y	150	**9.1/8 - 13.3/8"**	**fits 250 & 350 sTon**
33982Y 11.75 - 13.375"	150 sTon	50006455Y	150	**9.1/2 - 13.3/8"**	**fits 250 & 350 sTon**
		Alternative when user wants to hang off 500 sTon links			
		50006740Y	250	9.1/8 - 13.3/8"	fits 250, 350 & **500** sTon
29965Y 9.5/8 - 13.3/8"	350 sTon	50006440Y	350	9.1/8 - 13.3/8"	fits 250, 350 & 500 sTon
71274Y	250 sTon	50006440Y	350	9.1/8 - 13.3/8"	fits 250, 350 & 500 sTon
71275Y 13.1/2 - 14"	250 sTon	50006450Y	250	13.1/2 - 17.7/8"	fits 250, 350 & 500 sTon
33982Y 13.1/2 - 13.625"	150 sTon	50006450Y	250	13.1/2 - 17.7/8"	fits 250, 350 & 500 sTon
34807Y	150 sTon	50006450Y	250	13.1/2 - 17.7/8"	fits 250, 350 & 500 sTon
33632Y 16.75"	150 sTon	50006450Y	250	13.1/2 - 17.7/8"	fits 250, 350 & 500 sTon
33632Y 18 - 20"	150 sTon	50006460Y	250	18 - 24.5"	fits 250, 350 & 500 sTon
30598Y 18.625 - 20"	250 sTon	50006460Y	250	18 - 24.5"	fits 250, 350 & 500 sTon
34175Y 22-24"	250 sTon	50006460Y	250	18 - 24.5"	fits 250, 350 & 500 sTon

Safe working area (SWA)

⚠ *CAUTION: Consider a distance of 1m/3ft from the elevator as the Yellow zone (unsafe but accessible when needed) during installation.*

When working with the elevator there are three zones to consider:

1. Red Zone: unsafe at all times
2. Yellow Zone: unsafe but accessible when needed
3. Green Zone: safe

Operation

WARNING: Verification of the elevator securing and locking mechanism shall be possible at all times:

- if the mechanism is covered with mud, it shall be cleaned.

- sufficient light always shall be present.

- in harsh weather conditions measures shall be taken to allow correct verification.

WARNING: The elevator is being used in a zone 1 - 2 environment. Please apply to all regulations and legislation while working within these zones.

WARNING: Keep hands away from any pinch point or undesignated areas; use the green handles, if applicable, provided for operating the Elevators.

WARNING: If the elevator is damaged, has become deformed, doesn't function properly, take it out of service.

WARNING: Colour codes for tubular size and type shall not be used.

WARNING: During operation; always ensure the elevator is properly closed and when applicable the "closed & lached verification pin" is in place.

WARNING: Do not use elevators for any other purpose than for lifting the pipe type as described in the chapter "General specifications".

NOTE: Prior to operation the operator shall carry out a health and safety risk assessment in the workplace.

Safe Working Area (SWA)

When working with the elevator there are three zones to consider:

1. Red Zone: unsafe at all times
2. Yellow Zone: unsafe but accessible when needed
3. Green Zone: safe

During operation: don't stand under the elevator: this is the Red Zone.

Keep a distance of minimal 1m/3ft from the elevator: within this distance the SWA must be considered as Yellow Zone, outside this radius Green Zone.

Vertical/non-vertical lifting

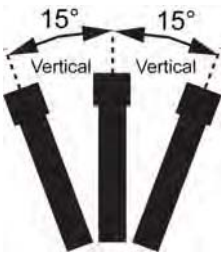

Vertical lifting is considered vertical ±15°

Non-vertical lifting is considered =< 75° as max from horizontal

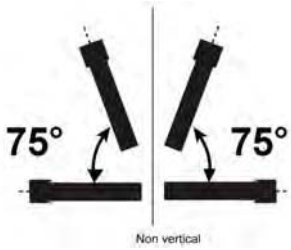

Lifting applications

⚠ **WARNING: Do not a non-vertical pick up of tubular with a standard elevator, except with a SMX, SJH, SJX, SPL, SJL or any other side door elevator with a “ latched and locked verification pin”.**

Elevator type	Designed for Vertical lifting	Designed for Non-Vertical lifting
YC	YES	NO
MYC	YES	NO
HYC	YES	NO
YT	YES	NO
MYT	YES	NO
HYT	YES	NO
TA	YES	NO
TMA	YES	NO
RGA	YES	NO
GA	YES	NO
GGA	YES	NO
MG	YES	NO
MGG	YES	NO
RGG	YES	NO
GG	YES	NO
HGG	YES	NO
SLX	YES	YES***
SMX	YES	YES***
SX	YES	YES***
SLXDD	YES	YES***
SJH	YES	YES*
SJL	YES	YES*
SPL	YES	YES*
SJX	YES	YES*
D-SJX	YES	YES*
SBX7	YES	NO**

* Use shackles only.

** Due to danger of weight of door.

*** Difficult if not impossible when door facing down.

Crushing load

The grade + wall thickness (tubing) & grade + contact area vs. elevator bore (collar type & 18° pipe) of the pipe determines the maximum string weight an elevator can handle. E.g. while running a low grade pipe with a Y-series slip type elevator, it is thinkable that the pipe crushes well below the pipe weight reaches the rated load of the elevator. In general it is also possible that the joints of the pipe can't take the load of the string and are torn apart. The load shoulder of the tooljoint may be sheared of or get damaged when using an OD which is too small.

In other words; The pipe determines in most cases (grades equal or below grade 110) how much weight can be run, the elevator doesn't. The rating of an elevator gives the maximum safe workload, but doesn't tell you how much weight of a certain brand/type of pipe it can handle. Contact your pipe manufacturer for more details.

Maximum allowable hook load to prevent crushing of casing

S = Pipe yield strength (Grade) in psi
A = Pipe cross-sectional area in inch²
R = Pipe outside radius in inch
L = insert height in inch
K = crushing factor = 2.6
Crushing factor = 1/tan (a+b)
a= slip back angle

b = friction angle

F in lbs.

$$F = A \times S \sqrt{\frac{1}{1 + \frac{R.K}{L} + \left(\frac{R.K}{L}\right)^2}}$$

The K-factor is assumed based on a friction coefficient of 0.2 between slip and bowl. In practice on a rig the friction could deviate from this 0.2; a lower friction leads to a lower allowable crushing load. The formula does not incorporate a safety factor.

Daily functional test prior to operation

Procedure

- Visually inspect the elevator for loose and missing parts.
- Visually inspect the elevator for cracks. Remove from service in case of cracks.
- Visually inspect the elevator for corrosion. Replace corroded parts.
- Check the condition of the hinge pins, latch pins and latch lock pins
- Check springs for knicks, burrs, pitting or cracks. Ensure springs are not painted and properly greased.
- Open the elevator and check the hinge pin and latch pin for wear
- Close the elevator and check the proper functioning of the latch for at least 10 times
- Check the elevator for proper operation of the latch stop mechanism. Latch should not stop against the body when engaged
- Check for wear of the wear bushings and that the wear bushing is to be replaced before it is worn down to the diameter of the elevator's metal through bore.

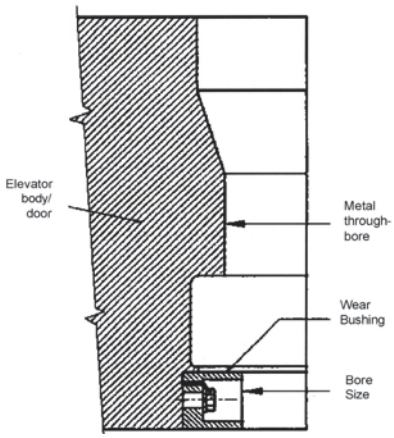

Routine lubrication prior to operation

See Daily Lubrication in Chapter Lubrication and Maintenance.

Operation of Y, G, X, A, SJL & SPL-series

Procedure

1. The door is opened by gripping the latch lock and pulling outward. This automatically releases the latch lock assembly and latch so the elevator can be positioned on the pipe.
2. When the elevator is properly closed around the pipe, the latch locks automatically.
3. The latch spring is designed to latch the elevator and hold it closed under normal operating conditions.
4. The latch lock provides additional security and assures the latch will remain closed under normal, loading conditions.
5. Ensure the latch lock verification pin is in place ensuring the latch lock can not open and the latch is actually locked.

Operation notes Y-series elevator

WARNING: Never use the Y-series slip type elevator to run drill pipe.

WARNING: Do not use YT or YC elevators due to limited capacity on semi's and rigs with 40 foot floors where an increased possibility of dynamic loading exists. In this case, use HYT, MYC or HYC elevators.

NOTE: The slips of Y series elevators will set when the elevator is raised against the tool joint, which pushes down on the slip-setting ring

Slip removal

Procedure

1. Remove top and bottom guide plate and slip setting ring by unscrewing the retainer bolts.
2. Remove slips, starting at latch end and proceeding clockwise, by removing the 4 slip pins.
3. Unscrew the insert retainer bolts to remove insert retainers and drive the inserts out using a brass punch and hammer.

To assemble the elevator slips reverse the above procedure taking the following into consideration:

- Install the correct size inserts and top and bottom guide,
- Secure all bolts and screws with lock wire where applicable.
- Place setting ring on body side
- Check slips for free movement and for gap between slip segments in the set position.
- Check slip inside diameter with slips in raised position as shown in chapter "Wear Data".

Opening and closing (elevator without verification pin)

Procedure

Step 1: Elevator is completely closed and locked.

Step 2: Gripping the elevator.

With your right hand you grip the right hand handle on the door.

With your left hand you grip the handle on the latch lock.

Step 3: Opening the latch lock.

Pull with your left hand on the handle of the latch lock to open it. By the resistance of the handle you feel when the latch lock is at the end of its stroke. At this moment the latch lock is dis-engaged.

Step 4: Opening the latch.

When the latch lock is at the end of its stroke, you have to increase the force on the handle to subsequently open the latch.

Step 5: Opening the elevator.

Keep on pulling with your left hand on the handle of the latch lock.

Once the latch is opened, you will automatically open the elevator in the same movement.

Step 6: Closing the elevator.

With your right hand you grip the handle on the door.

With your left hand you grip the handle on the body

Push the two handles towards each other.

In one movement you will close the elevator, engage the latch and engage+ lock the latch lock.

Step 7: Verification that the elevator is properly closed, latched and locked.

The elevator is properly latched when the latch falls against the body

The latchlock is properly locked when the latchlock falls completely within the contour of the latch.

Opening and closing (elevator with verification pin)

Procedure

The opening and closing sequnce is principally the same as for elevator without verification pin.

Situation 1: Opening with verification pin installed

1. Opening the elevator can NOT take place when the verification pin is in verification position

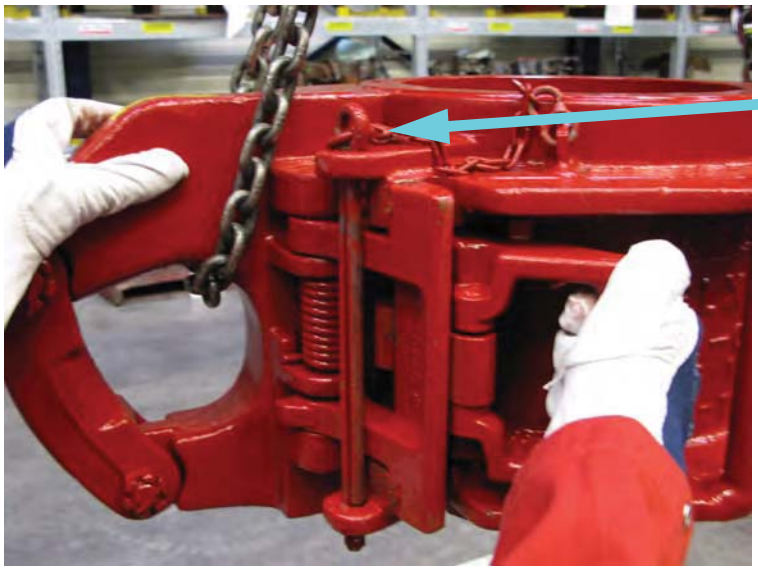

Situation 2: Opening with verification pin removed.

2. Opening the elevator can only take place when the verification pin is removed from the verification position. The verification pin should be stored in the storage position to prevent the pin to get damaged.

Situation 3: Fitting verification pin while elevator is not fully closed, latched and locked.

3. It is NOT possible to insert the verification pin unless the elevator is closed, latched and locked. Observe the gap between body and door.

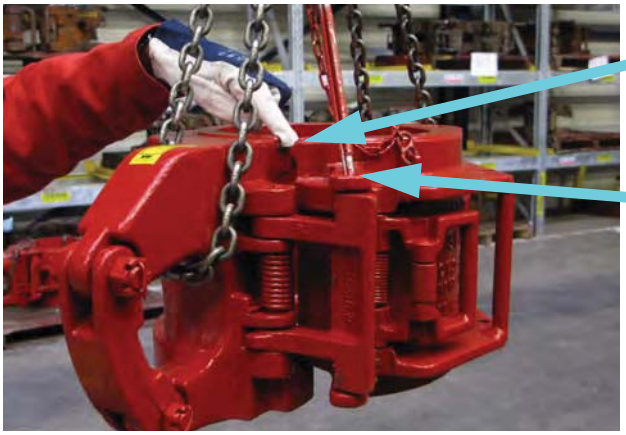

Situation 4: Inserting verification pin prior to closing the elevator.

4. Closing the elevator with verification pin inserted prior to closing, prevents the closing sequence to be finished. Observe the gap between body and door.

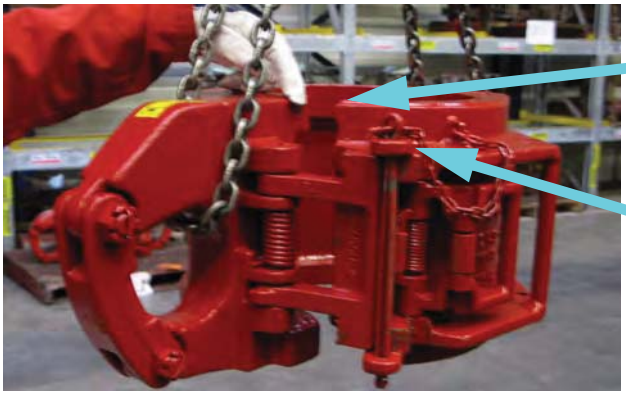

Situation 5: Closing elevator with failing latch spring, verification pin inserted.

Closing the elevator with verification pin inserted prior to closing when latch spring fails, prevents the closing sequence to be finished. Observe the gap between body and door.

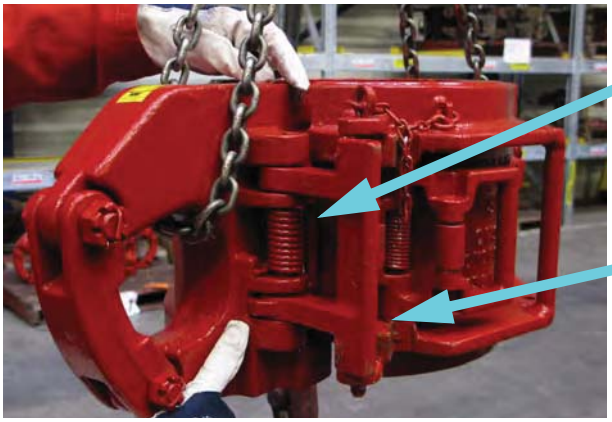

Operational notes on SPL-series elevator

Procedure

⚠ **WARNING: SPL-elevator; Do not run the SPL into the tool joint at high pick up speed. Do not use on square shoulder tubulars.**

1. Verify that the insert angle is the same or no more than 2 degrees greater than the upset angle
2. Measure the most worn tubular box and measure the internal diameters between the inserts. Verify that the most worn box outside diameter is at least 0.4” greater that the internal diameter between the inserts.

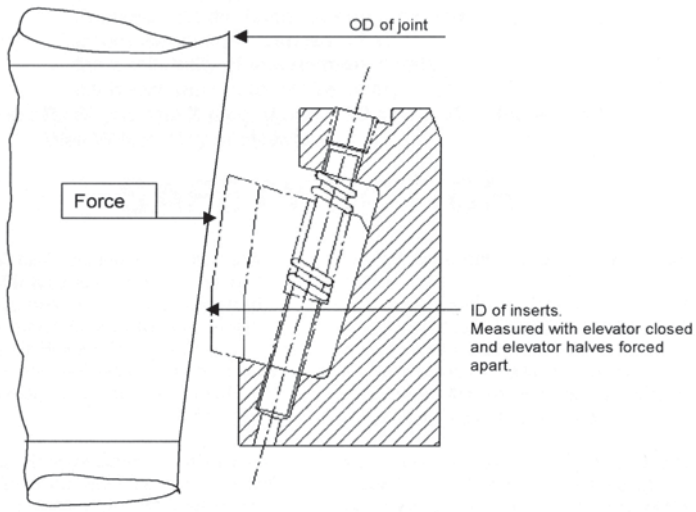

Recommendations

1. Make sure to use the lifting handles provided for opening, closing and handling the elevator. Keep hands away from all other areas when the elevator is in use.
2. Check the latch and latch lock for full engagement when closed around the pipe
3. Ensure the “latched-and-locked verification pin” (cotter pin) is engaged.
4. When utilizing slip type elevators to lift tubular the driller should slowly lift the elevator until the slip setting ring has engaged the coupling of the tool joint and the slips are fully set. Rapid lifting prior to the slips being fully set may result In the pipe collar dropping onto the slip setting ring, resulting in the full weight of the pipe stand impacting the elevator. This may result in damaging the elevator and could result in the pipe being dropped, thus causing injury to rig result personnel and damage to other equipment.
5. Make sure all slip segments are free in the up position when latching the elevator. If any of the segments are stuck in the down position, the elevator may not close properly
6. Make sure the elevator and slip bodies are used with the correct size tubular (per API specification). Oversized pipe will cause difficulties such as latching partially or not at all. Undersized or oversized pipe could cause uneven stress distribution, inadequate load bearing area, and possible wedging in the slip setting ring.

Operational notes SMX-elevator

Ensure that the elevator is closed when not using it, e.g. when it is stored on the rig floor.

Procedure opening

1. Grab the handle on the link (recommended) with the left hand.
2. Grab the cam latch lock with your right hand and simultaneously push the verification lock down (60°) with finger tips.
3. Pull the door open to the right. .

2) Pull the cam latch lock for opening the door

1) Open the verification lock downwards

Procedure closing

1. Close the door by grabbing the link handle on the link with the left hand.
2. Grab the cam latch lock on the door with the right hand and push to close the door.

Rotate vertification lock in horizontal position.

3. Rotate the verification lock to a horizontal position.

⚠ **WARNING: Always ensure the door is closed properly and the verification lock is in the correct (horizontal) position.**

Operation of the SJH-elevator

Procedure closing

- Open the jaws by pulling the center handle.
- Lower the SJH elevator over the pipe, just below the tool joint, pin box or upset, ensure the centre of gravity is on the right side of the elevator
- The jaws will automatically close under weight of the elevator.
- Use the latch lock pin to secure the latch
- Start lifting

⚠ **WARNING: Use the latch lock pin (verification pin) before hoisting any pipe.**

Procedure opening

⚠ **WARNING: The elevator will open when pulling the handle. Ensure it is safe to open the elevator**

- Remove the latch lock pin
- Pull the handle
- Move the elevator away from the pipe

Operation of the (D)SJX-elevator

Procedure closing

- Open the elevator (both sides possible); see procedure opening.
- Lower the (D)SJX elevator over the pipe, just below the tool joint, pin box or upset.
- Close the elevator.
- Rotate the hinge pin anti clockwise to hardstop.
- Lower the hinge pin.
- Rotate the hinge pin anti clockwise to hardstop.
- Fit the verification pin.
- Check function of the verification pin.
- Start lifting.

⚠ **WARNING: Use the verification pin before hoisting any pipe.**

Procedure opening

⚠ **WARNING: The elevator will open when pulling the handle (hinge pin). Ensure it is safe to open the elevator**

- Remove the verification pin.
- Rotate the hinge pin clockwise to hardstop.
- Pull up the hinge pin.
- Rotate clockwise to hardstop.
- Open the elevator.
- Move the elevator away from the pipe.

Operation of the DSJX-elevator with 2 way sling

Procedure suspension

- Use the 2-way lifting sling p/n 50001105.
- Suspend the DSJX using proper sized green pin shackles (see dwg 50001105).
- Ensure the shackles have sufficient freedom of movement.
- Maximum tilt angle lifting sling for both legs is 25° from vertical as shown on drawing.
- Working Load Limit (WLL) is 12 sTon (10.9 Tonne).

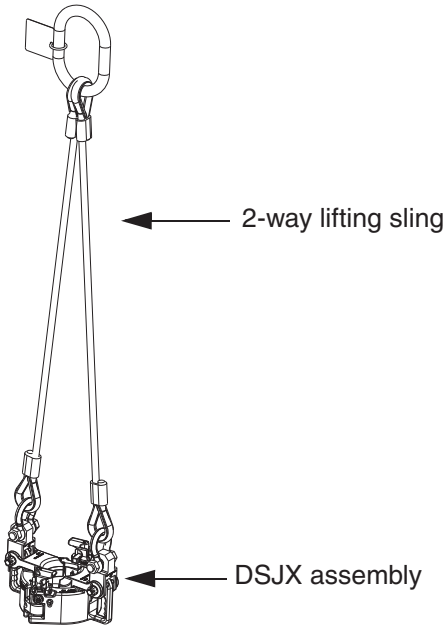

Operations SBX7

⚠ **WARNING: Never exceed the load rating of the elevator, bushings and pipe at any given time in any situation.**

⚠ **WARNING: when opening the elevator door ensure the elevator does not turn over.**

Check that the elevator, pipe/lifting tool, links and link adapter are all properly loaded and aligned to prevent unequal loading of any of these parts. Especially in case of increasing loads this may become critical, when the load is distributed in an uneven way, the stress pattern in the elevator may change. This might affect the load rating of the elevator.

The door of the SBX7 can be opened in 3 ways: by removing the hinge pin left or right or by removing both hinge pins.

Procedure

1. Remove the locking plate of the hinge pin(s)
2. Remove one of the hinge pins by using the bail of the hinge pin by using a lifting sling.
   - When removing both hinge pins: first mount the lifting eye on top of the door and pick up the weight of the door.
3. Remove the hinge pin(s).
4. Place the hinge pin(s) in a safe place
5. When one hinge pin removed: open the door carefully, the SBX7 could turn over / when two hinge pins removed: pull out the door (when both hinge pins are removed) carefully.
6. Load the elevator
7. Close the door
8. Mount the hinge pin(s)
9. Mount the locking plate(s)
10. Lockwire the bolt(s) of the locking plate.

Use SBX7 in combination with a Riser Running Tool (RRT)

1. RRT must comply with ISO-13535/API 8C 5th edition
2. RRT must comply with the Machinery Directive 2006/42/EC and the Directive 94/9/EC “Equipment and protective systems in potentially explosive atmospheres”
3. RRT combined with the SBX7 must comply with the Machinery Directive 2006/42/EC and the Directive 94/9/EC “Equipment and protective systems in potentially explosive atmospheres”
4. RRT must have an Instruction Manual
5. Special Square Shoulder bushings must be used. For mounting bushings refer to “Installing Bushings In Elevator” of this chapter. RRT must fit in bushing (see tabel below)

⚠ **WARNING: Surface pressure must be calculated and comply with with requirements of API specification 8C.**

Installing bushings in elevator SBX7

1. Apply grease to the back of the bushings.
2. Apply grease to top and bottom load-shoulder of the elevator.
3. Apply grease to the locating pins of the bushings.
4. Apply grease to the locating slots of the bushings.
5. Apply grease to the locating holes in elevator.
6. Mount lifting eyes to bushing (2 pce for each bushing)
7. Pick up a bushing segment from the bushing support frame and place it horizontally into the elevator. There are two bushings with two locating pins each and two bushings with one locating pin each.
8. Mount the bushings locks (pc. #50000595).
9. Repeat the above operation for all the bushing segments.
10. Attach the safety cables to the bushing segments (4x).

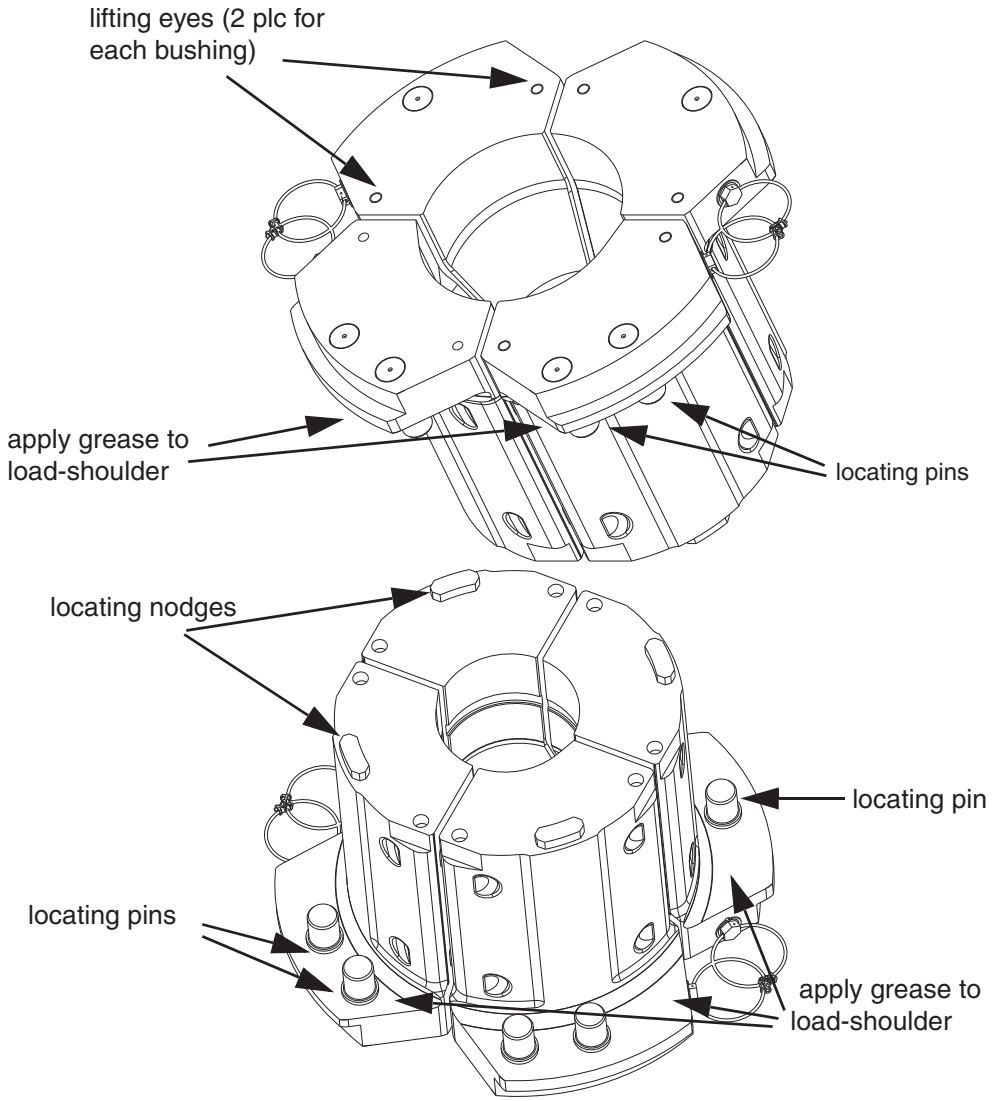

Page intentionally left blank

Assembly and dis-assembly

Safety

WARNING: Use only genuine NOV parts when assembling the elevator.

CAUTION: Always wear eye protection in disassembly and assembly operations. Practice safety in all performances and use approved safety methods, materials and tools. Keep hands away from any undesignated areas.

CAUTION: Be aware of the fact that springs are being used. They may cause injury when disassembling the elevator.

NOTE: All images in this chapter are for info only. Please use the official drawings for reference.

NOTE: All disassembly should be performed in a dry, dirt-free area.

Field service

Outside of routine maintenance and inspections as outlined in API RP 8B latest revision, servicing of elevators must be limited to changing out of old non-load bearing parts with new genuine NOV parts.

Shop repairs

The elevator must be removed from service and returned to an authorized NOV repair facility when one or more of the following occurs:

- Indications found beyond the acceptable level as outlined in chapter "Non-destructive examination"
- Wear of specified parts is beyond the acceptable level as outlined in chapter "Wear data"
- Use of non-standardized or non-genuine NOV parts.
- Unauthorized modifications or repairs.

The below listed activities must only be performed at a NOV facility or a NOV authorized repair shop:

- Welding
- Preheating above 150° C (300° F)
- Re-machining
- Replacement of primary load bearing components

Elevator disassembly guidelines

Remove hinge, latch and latch lock pin retainers by one of the following methods (when applicable):

Splitting the lock bar by drilling through.

Procedure

1. Drill through the lock bar
2. Use a cold chisel to split the separated lock bar

Figure 1: Lock bar removed correctly

3. Do not try to remove the lock bar pin by trying to drive the hinge pin from the underside through the hole

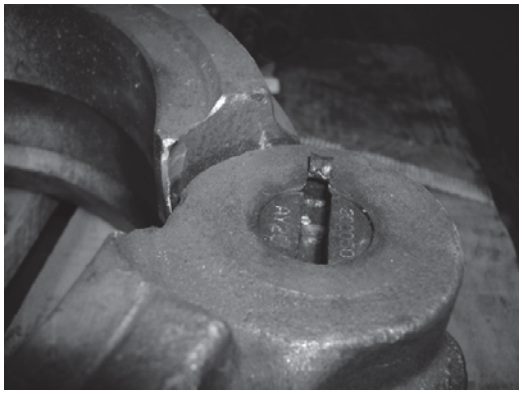

Figure 2: WRONG: Lock bar removed by driving shaft through from underside, causing damage to elevator.

4. Now remove the hinge, latch and latch lock pins to separate body, door latch and latch lock.
5. Remove link blocks and / or door latch arms by driving out the pins and unscrewing bolts and nuts.
6. To assemble the elevator reverse the above procedure where applicable; use a new lock bar

Assembly of the lockbar

When the lockbar needs replacement, NOV recommends to pre-heat lockbars prior to installation at all times as follows:

Procedure

1. Preheat lockbar with torch, between 760°C – 816 °C / 1400°F - 1500°F (see Glowchart for reference)
2. Install lockbar in groove.
3. Drive lockbar in position by straightening with a chisel.
4. Air cool lockbar.
5. Once lockbar is back to ambient temperature elevator is ready to go back into service.

2000°F	Bright yellow	1093°C
1900°F	Dark yellow	1038°C
1800°F	Orange yellow	982°C
1700°F	Orange	927°C
1600°F	Orange red	871°C
1500°F	Bright red	816°C
1400°F	Red	760°C
1300°F	Medium red	704°C
1200°F	Dull red	649°C

GlowChart

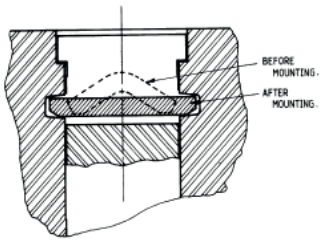

Placing the lockbar/hinge or latch pin retainer

Assembly SJX and DSJX-elevator

Procedure

- Fit the grease nipples in the body halves (4)
- Fit the two body halves(1) together
- Insert the hinge pins (2)
- Screw in the lock screws (12). Lock the screw by the nut (13) + washer (14)
- Place the ball nose spring plunger (9) including the tab washer (10) and nut (11)
- Check the functioning by opening and closing the elevator both sides.
- Lock the tab washer (10)
- Fit the verification pin (5)
- Secure/fit the chain of the verification pin with the cotter pin (8)
- Check functioning of the verification pin (5)

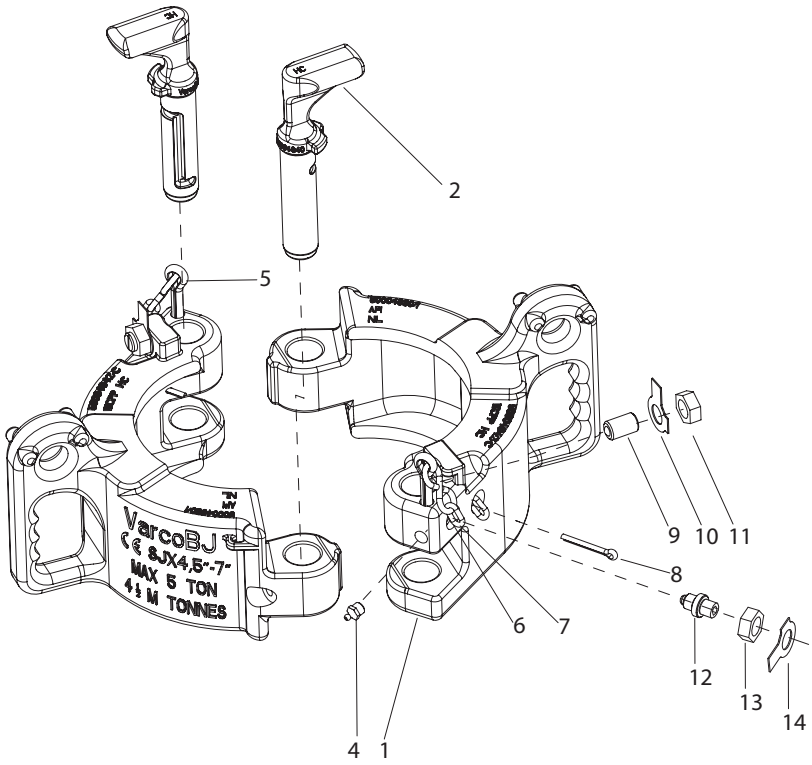

Assembly inserts of the DSJX-elevator

Procedure

1. Place the link adapters
2. Place the inserts
3. Mount the adapter pins
4. Mount nuts
5. Lock nuts by cotter pins

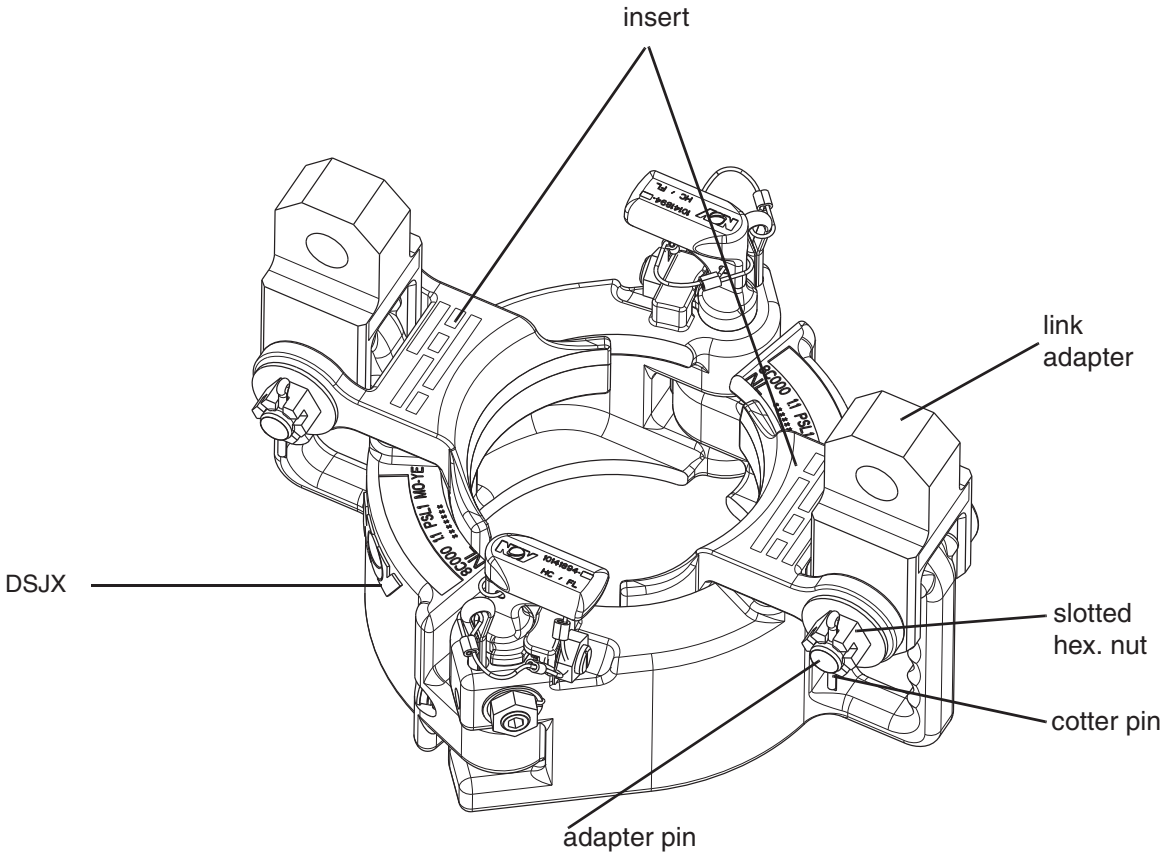

Assembly SJH-elevator

Procedure

- Fit the grease nipples (7) on the latch (6)
- Insert the guidance pins (17) through back of elevator
- Fit the springs (16)
- Mount the spring release plates(15) with the bolts and washers (1,2)
- Slide the handle (3) through the back of the elevator (18)
- Lock the handle using the nut and cotter plate (4,5)
- Fit the springs from the back of the elevator (24)
- Fit the retainer bolts (20)
- Lock the retainer bolts with the washers, nuts and cotter pins (21,22,23)
- Fit the jaws with the hinge pins (19)
- Lock the jaws with the bolts, washers and cotter pins (12,13,14)
- Use the safety latch lock pin to lock the handle (8,9)

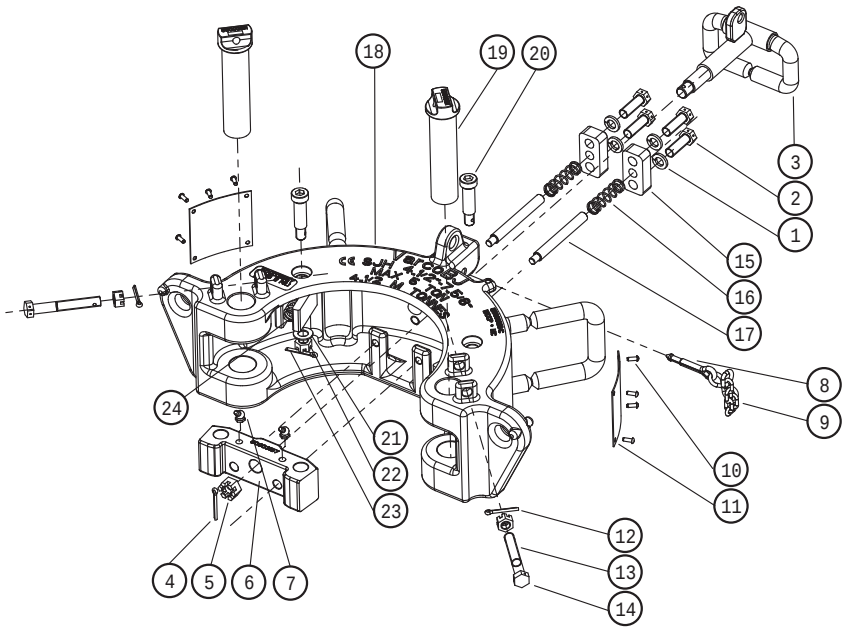

SBX7 dis-assembly

Procedure

1. Put the SBX7 on a stable, level underground
2. Remove the locking plates of the hinge pins
3. Mount a lifting eye on top of the door and use a lifting sling.
4. Pick up the weight.
5. Remove the hinge pins. Allthough the weight of the hinge pin allows them to be removed manually, it is safer to do so by tugger.
6. Place the hinge pins in a safe place
7. Pull out the door carefully and store in a safe place.

SBX7 assembly

NOTE: Use the proper torque for assembly parts (see chapter Appendixes).

Procedure

1. Assembly can be done by doing disassembly in reverse sequence.
2. Lock all parts as indicated on the assembly drawings.

G-type elevator assembly

Procedure

1. Place the Latch Spring together with the Springpin.
2. When placing the Latchpin alway use a plastic hammer.

tension the spring before placing the Springpin

3. Place the Latch Lock Spring

Place the Latch Lock Spring over the Lock

4. Place the Lock in the Latch

Place the Lock in the Latch and put Lock Bolt in

5.

Check if the hook does not touch the pin

6. Place nut

Place nut on Lock Bolt and secure with cotter pin

7. Hang elevator in crane and tip it over. Check if the Latch does not tip over. If yes, the tension on the spring is too low.

8. Place the Latchspring

Placing the Latchspring

9. Lockwire the Wearbushing

double the lockwire; ensure the wire is not damaged

10.

check length with the wearbushing

11.

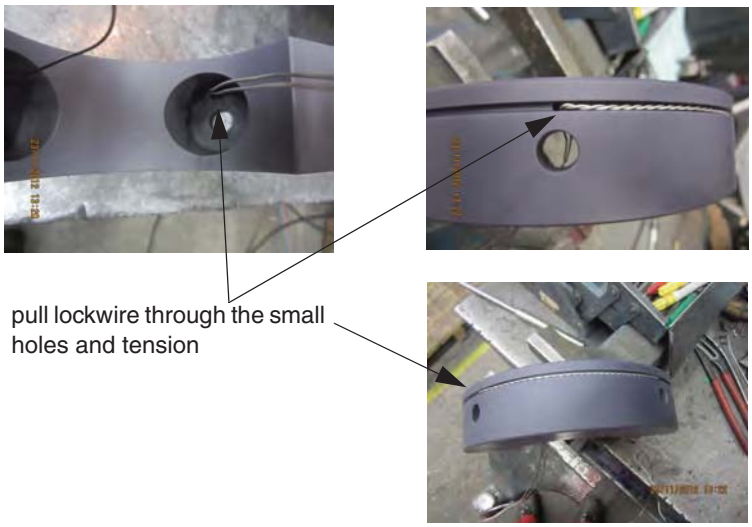

12. Place the wearbushing in the elevator

ensure the recess is at the top

13. Mount the wearbushing

14. Lockwire bolts.

Assembly verification lock for SMX elevator

Procedure

1. Put the handle in the Stopblock and place the spring

2. Mount the washer and the nut, ensure the cotter pin can be mounted

3. Mount the cotter pin

SLX elevator: mounting the Latch spring

Procedure

1. Mount the Latch Spring

2. Check the function of the Latch and Latchlock

Place the elevator in the most unfavourable position to close the elevator (door down)

3.

Close the elevator as slowly as possible. Do this again faster

4.

Latch and Lock should function correct, if not the springtension is too low or the mechanism is not clean

5.

Place a big screwdriver behind the Latch and tension it.

The Lock may not open or move

TA/TMA assembly

Procedure

1. Mount Latch/latchlock assembly together with Latchspring and Latchpin in the Latchpin hole

Grease contact surface lightly

2.

Use pipes to tension the Latchspring and use a plastic hammer to mount the Latchpin

3.

Check the movement of the latch; lock if not: the springtension is not correct and the spring need to be replaced

4.

Put a screwdriver behind the latch and check if the latch lock can be opened; this should not be possible

Trouble shooting

When problems cannot be solved, contact an authorized NOV repair facility.

Overview possible problems Y, G, X & A series

Problem	Possible cause	Possible solution
Elevator does not close or is difficult to close	Parts bent or damaged.	Check elevator.
	Pipe to big	Use different size elevator
Elevator does not hang level	Length of links not equal	Use same length slings
Elevator does not open	Yielding due to overload	Replace Elevator
	Elevator corroded	Open elevator by force, clean and lubricate. Check elevator for excessive wear.
Bent pins	Elevator is overloaded	Replace Elevator
Elongated holes	Elevator is overloaded	Replace Elevator
	Elevator holes worn	Check amount of wear. If within acceptance criteria use as is, when over acceptance criteria, replace Elevator

Overview possible problems SJX and DSJX

Problem	Possible cause	Possible solution
Elevator does not close or is difficult to close	Removable hinge pin not locked in upper position	Pull out removable hinge pin
	Pipe to big	Use different size elevator
Elevator does not hang level	Length of slings not equal	Use same length slings
Elevator does not open	Yielding due to overload	Replace Elevator
	Elevator corroded	Open elevator by force, clean and lubricate. Check elevator for excessive wear.
Bent pins	Elevator is overloaded	Replace Elevator
Elongated holes	Elevator is overloaded	Replace Elevator
	Elevator holes worn	Check amount of wear. If within acceptance criteria use as is, when over acceptance criteria, replace Elevator. See chapter Maintenance

Overview possible problems SJH

Problem	Possible cause	Possible solution
Elevator does not close or is difficult to close	Pipe to big	Use different size elevator
Elevator does not hang level	Length of slings not equal	Use same length slings
	No balancing strap being used	Use balancing strap
Elevator does not open	Yielding due to overload	Replace Elevator
	Elevator corroded	Open elevator by force, clean and lubricate. Check elevator for excessive wear.
Bent pins	Elevator is overloaded	Replace Elevator
Elongated holes	Elevator is overloaded	Replace Elevator
	Elevator holes worn	Check amount of wear. If within acceptance criteria use as is, when over acceptance criteria, replace Elevator. See chapter Maintenance
Latch does not move	Corrosion, dirt blocking proper functioning	Disassemble, clean, lubricate and check guide pins
Jaw opening too large	Worn jaws	Check wear of jaws
Latch lock pin does not function properly	Lost spring force	Replace spring
Handle moves too easily	Handle springs lost spring force	Check springs, clean, lubricate, replace springs if required
Jaws sloppy	Hinge pins worn, bore jaws worn	Check hinge pins and bore; Repair and/of replace

Pipe is stuck in a slip type elevator

WARNING: The operator needs to make an assessment of the emergency situation and the posible hazards resulting from the emergency situation.

WARNING: Any of the below listed procedures are potentionally unsafe actions.

Procedure #1

1. Remove the stuck pipe and elevator from the string
2. Hang off the single in a slip in the mouse hole
3. With a tugger line drop a weight (drill collar or so) on the elevator

Procedure #2

1. Remove the stuck pipe and elevator from the string
2. Torchcut the pipe below the elevator in such a way that the pipe is sticking out between 3 and 4 inches below the elevator
3. Now bump the pipe on the floor
4. Send elevator to a repair shop for inspection

Procedure #3

NOTE: This procedure may be detrimental if not fatal for the elevator.

1. Remove the stuck pipe and elevator from the string
2. From the inside diameter of the pipe, vertically torchcut the pipe blasting outwards in the gap between the slips
3. From the inside diameter of the pipe, vertically torchcut the pipe, blasting outwards in the gap between the slips and the elevator
4. Send elevator to a repair shop for inspection

Page intentionally left blank

Appendixes

Risk assessment acc. to EN12100:2010

Conclusion Risk Assessment

In general, crew must:

- Wear personal safety protection like safety glasses, hard hat etc.
- Follow instructions as stated in the manual.
- Have knowledge of rig procedures.
- Must have been instructed for safe use of the Elevator.
- Always use secondary retention as established and implemented by NOV.
- Do not rely on visual signals “elevator closed and latched” from deckhand.

Applicable standards

EN-ISO 12100:2010 Safety of machinery - Basic concepts, general principles for design - Risk assessment and risk reduction

Machinery Directive: 2006/42/EC

API 8C

Receipt, storage, transport & decommissioning

NOTE: All exposed, not painted metal surfaces are coated with a rust preventative at the factory prior to shipment for transport only.

Immediatelly after receipt*

Check the tool immediately after reception and re-preserve the tool as required (at the latest within 1 month) as per table below:.

Description	Recommended preservation
All unpainted static steel surface and flanges	Rustilo DWX 32
All unpainted dynamic steel surfaces	Rustilo DWX 32
Exposed bolts and nuts	Rustilo DWX 32
Grease fittings supplied with cap.	Cap + Denso tape*
All grease points	Lubricate

* In case long time preservation is ordered; follow procedure TSEL-0191 or 0194.

Inspection and test during storage

- All accessible exposed surfaces should be checked and if needed re-preserved periodically (once per 3 months is recommended) to be sure that no corrosion is taking place.
- Test the tool annually as a minimum as per User's Manual.

Storage general recommendations

- Main unit should be palletized for indoor storage. A cargo container would be appropriate for indoor/ outdoor storage.
- Every attempt should be made to avoid wide variations in temperature and high humidity. The preferred environment would be clean and dry at 60°F (16° C) ambient. If high humidity is unavoidable, 70° F (21° C) is recommended.
- All openings should be covered to prevent water or dust from entering.

Storage after use

All exposed, not painted metal surfaces, are coated with a rust preventative coating at the factory prior to shipment. When the elevator is not being used for a longer period then 3 days the following steps should be carried out.

Procedure

- Clean the elevator
- Grease the elevator as described in chapter lubrication.
- Grease all blank parts.
- Check periodically to ensure no corrosion is taking place.

Transport

⚠ **WARNING: Only lift the tool at it's dedicated lifting points or ears.**

The best way of transporting the tool is in its original crate. Use oiled paper and seal the box with plastic to prevent leaking when stored outside. Secure the top safely.

Decommissioning

The tool may contain grease, steel, rubbers, plastic, stainless steel, mild steel and several assembled components with undefined consistency or mixtures. The tool can be contaminated with drilling fluids, hydraulic fluids and preservatives. After the tool is decommissioned, it is recommended to disassemble the tool in a place where waste fluids can be contained and properly disposed of.

⚠ **WARNING: Any fluids, mud and grease are potentially unsafe when in contact with the skin. Always wear gloves and safety goggles when disassembling the tool.**

1. Clean the tool with a steam cleaner.
2. It is recommended to disassemble the tool in a place where drainage for waste fluids is possible.
3. Remove all quick-disconnects, hoses, cylinders and manifold block and bleed off hydraulic oil.

⚠ **WARNING: Accumulators (if applicable) may contain high pressure gasses or liquids. Refer to the OEM-documentation for safe removal and disposal.**

4. Accumulator (if applicable): let all the pressure out and remove the valve. Decontaminate if necessary.
5. Remove the parts.
6. Carry off to proper place for final storage or destruction.

Torque values (US) for bolts

		Bolts Lubricated with Light Machine Oil Grade 8			Bolts lubricated with Anti-seize compound Grade 8		
Dia.	**Threads per inch**	**Min. Torque (ft lb)**	**Max. Torque (ft lb)**	**Clamp force (lb)**	**Min. Torque (ft lb)**	**Max. Torque (ft lb)**	**Clamp force (lb)**
Coarse Thread Series, UNC							
1/4"	20	11.4	12.6	2860	8.6	9.5	2860
5/16"	18	24	26	3720	17.8	19.7	3720
3/8"	16	43	47	7000	32	35	7000
7/16"	14	67	74	9550	50	55	9550
1/2"	13	105	116	12750	78	87	12750
9/16"	12	143	158	16100	107	118	16100
5/8"	11	209	231	20350	157	173	20350
3/4"	10	361	399	30100	271	299	30100
7/8"	9	570	630	41600	428	473	41600
1"	8	855	945	54500	641	709	54400
1 1/8"	7	1216	1344	68700	912	1008	68700
1 1/4"	7	1729	1911	87200	1297	1433	87200
1 3/8"	6	2261	2499	104000	1696	1874	104000
1 1/2"	6	3002	3318	126500	2252	2489	126500

Tensile Strength = 150,000 psi to 1" dia. Proof Strength = 120,000 psi

		Bolts Lubricated with Light Machine Oil Grade 8			Bolts lubricated with Anti-seize compound Grade 8		
Dia.	**Threads per inch**	**Min. Torque (ft lb)**	**Max. Torque (ft lb)**	**Clamp force (lb)**	**Min. Torque (ft lb)**	**Max. Torque (ft lb)**	**Clamp force (lb)**
Fine Thread Series, UNF							
1/4"	28	13.3	14.7	3280	10	11	3280
5/16"	24	24	26	5220	17.8	19.7	5220
3/8"	24	48	53	7900	36	39	7900
7/16"	20	76	84	10700	57	63	10700
1/2"	20	114	126	14400	86	95	14400
9/16"	18	162	179	18250	121	134	18250
5/8"	18	228	252	23000	171	189	23000
3/4"	16	399	441	33600	299	331	33600
7/8"	14	627	693	45800	470	520	45800
1"	14	950	1050	59700	713	788	59700
1 1/8"	12	1368	1512	77000	1026	1134	77000
1 1/4"	12	1900	2100	96600	1425	1565	96600
1 3/8"	12	2584	2856	118400	1938	2142	118400
1 1/2"	12	3382	3738	142200	2537	2804	142200

Tensile Strength = 150,000 psi to 1" dia. Proof Strength = 120,000 psi

Torque values (metric) for bolts

		Bolts Lubricated with Light Machine Oil Grade 8			Bolts lubricated with Anti-seize compound Grade 8		
Dia meter	**Threads per inch**	**Min. Torque (Nm)**	**Max. Torque (Nm)**	**Clamp force (N)**	**Min. Torque (Nm)**	**Max. Torque (Nm)**	**Clamp force (N)**
Coarse Thread Series, UNC							
1/4"	20	15.5	17.1	12870	11.7	12.9	12870
5/16"	18	32.6	35.4	16740	24.2	26.8	16740
3/8"	16	58.5	64	32500	43.5	47.6	31500
7/16"	14	91.1	100.6	42980	68	92.5	42980
1/2"	13	143	158	57380	106	118	57380
9/16"	12	195	215	72450	145.5	160	72450
5/8"	11	284	314	91580	213.5	235	91580
3/4"	10	491	542	135450	368	407	135450
7/8"	9	775	857	187200	582	643	187200
1"	8	1163	1285	245250	872	965	245250
1 1/8"	7	1654	1828	309150	1240	1370	309150
1 1/4"	7	2351	2598	382400	1764	1949	392400
1 3/8"	6	3075	3398	468000	2306	2549	468000
1 1/2"	6	4082	4512	569250	3062	3385	569250

		Bolts Lubricated with Light Machine Oil Grade 8			Bolts lubricated with Anti-seize compound Grade 8		
Dia meter	**Threads per inch**	**Min. Torque (Nm)**	**Max. Torque (Nm)**	**Clamp force (N)**	**Min. Torque (Nm)**	**Max. Torque (Nm)**	**Clamp force (N)**
Fine Thread Series, UNF							
1/4"	28	18.1	20	14760	13.6	15	14760
5/16"	24	32.6	35	23490	24.2	26.8	23490
3/8"	24	65.3	72	35550	49	53	35550
7/16"	20	103	114	48150	77.5	86	48150
1/2"	20	155	171	64800	117	129	64800
9/16"	18	220	239	82130	165	182	82130
5/8"	18	310	343	103500	232	257	103500
3/4"	16	542	600	151200	406	450	151200
7/8"	14	853	943	206100	639	707	206100
1"	14	1292	1428	268650	970	1071	268650
1 1/8"	12	1860	2056	346500	1396	1542	346500
1 1/4"	12	2584	2856	434700	1938	2128	434700
1 3/8"	12	3514	3884	532800	2635	2913	532800
1 1/2"	12	4599	5083	639900	3450	3813	639900

Tensile Strength = 1,034,214 kPa to 1" dia. Proof Strength = 827,370 kPa

Page intentionally left blank

Part lists and slip assemblies

Collar type center latch elevators A series

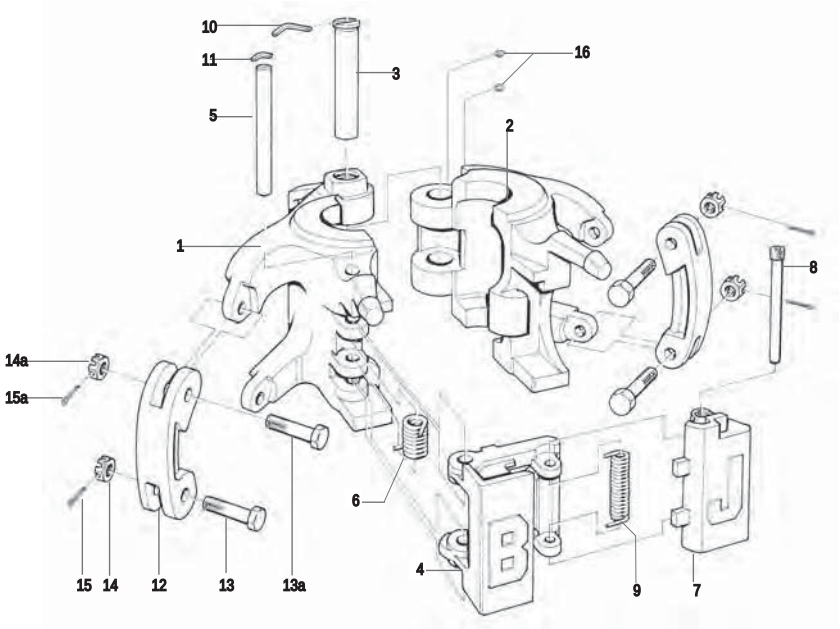

Parts list A series

Item	Description	Qty	TA 35 32387Y*	TA 65 32385Y*	TA 65 32386Y*	TMA 100 50006310Y*	TA 100 200000Y*	TA 150 32754Y*	TA 150 39342Y*
1	Body	1	32474Y	32445Y	32465Y	50006311Y	200001Y	32755Y	39346Y
2	Door	1	32473Y	32444Y	32464Y	50006312Y	200002Y	32756Y	39347Y
3	Hinge pin	1	32917	32916	32915	50006313	32919	32924	32924
4	Latch	1	32446Y	32380Y	32380Y	32380Y1	32752Y	32752Y	32752Y
5	Latch pin	1	32424-4	32424-3	50713	50006314	200004	32762	32762
6	Latch spring	1	32482	32470	32470	32470	32760	32760	32760
7	Latch lock	1	32447-1	32381-1	32381-1	32381-1	32757-2	32757-2	32757-2
8	Latch lock pin	1	36685	36208	36208	36208	36207	36207	36207
9	Latch lock spring	1	32483	32469	32469	32469	32758	32758	32758
10	Hinge pin retainer	1	32918	32892	32892	55505	32925	32925	32925
11	Latch pin retainer	1				200052	50200053		
12	Link block	2	23404	32430	32430	32430	32430	9519	9519
13	Link block bolt	2	23406	939099-65	939099-65	939099-65	939099-6 5	8145	8145
13a		2	23406	939099-65	939099-65	939099-65	939099-6 5	939099-97	939099-97
14	Link block nut	2	50508-C	50510-C	50510-C	50510-C	50510-C	50512-C	50512-C
14a		2	50508-C	50510-C	50510-C	50510-C	50510-C	50514-C	50514-C
15	Cotter pin	2	51402-12	51402-12	51402-12	51402-12	51402-12	51402-12	51402-12
15a		2	51402-12	51402-12	51402-12	51402-12	51402-12	51402-16	51402-16
16	Grease fitting	2	53201	53201	53201	53201	53201	53201	53201

* See bore code charts

HYC, MYC & YC series

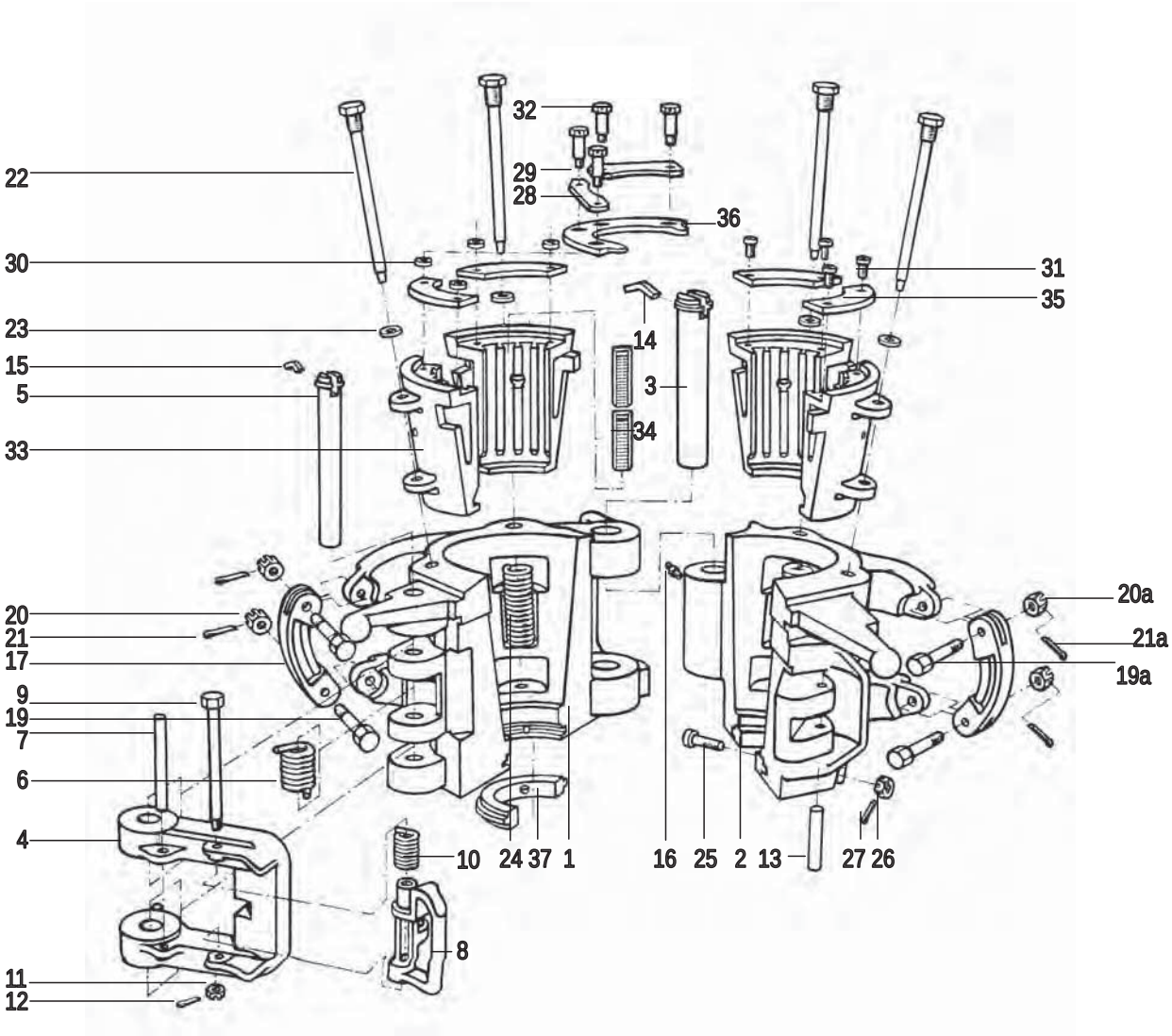

Part list HYC, MYC & YC series

Item	Description	Qty	HYC	MYC	YC
1	Body	1	55301Y	200361Y	24074Y
2	Door	1	55302Y	200362Y	24073Y
3	Hinge pin	1	55311	200364	24181
4	Latch	1	55503Y	200363Y	15348Y
5	Latch pin	1	BJ55312	200365	24182
6	Latch spring	1	34909	200367	12978
7	Latch spring stop	1	13185	200368	
7a	Latch cam	1			12946
8	Latch lock	1	13152	13152	12972
8a	Latch lock pin	1			BJ13530
9	Latch lock bolt	1	15101	200371	
10	Latch lock spring	1	13188	13188	
11	Latch lock bolt nut	1	50512-C	50512-C	
12	Cotter pin	1	51402-12	51402-12	
13	Door lug pin	1	BJ13190	200366	12529
14	Hinge pin retainer	1	55504	36901-1	
15	Latch pin retainer	1	55505	36951-1	29448
16	Grease fitting	1	53201	53201	53201
17	Link block	2	9519	9519	9519
19	Link block bolt	2	8145	8145	8145
19a		2	939099-97	939099-97	939099-97
20	Link block nut	2	50512-C	50512-C	50512-C
20a		2	50514-C	50514-C	50514-C
21	Cotter pin	2	51402-12	51402-12	51402-12
21a		2	51402-16	51402-16	51402-16
22	Slip pin ass'y	4	50003697-2	50003697-2	50003697-2
23	Lock washer	4	51112-C	51112-C	51112-C
24	Slip spring	4	945044-2	24049	24049
25	Guide plate screw	4	55508**	200369	24075
26	Guide plate nut	4	50508-C	50508-C	50508-C
27	Cotter pin	4	51402-8	51402-8	51402-8
28 *2	Retainer 3 1/2" - 7"	2	30216	30216	30216
28 *2	Retainer 7 5/8"	2	BJ70147		
29 *2	Shoulder screw	4	55501	30211	30211
30 *2	Rubber bushing	4	55502	30213	30213
31 *2	Insert retainer screw	4	50108-8-C	50108-8-C	50108-8-C
32 *2	Lock wire	AR	947879	947879	947879

*2 Part of slip assembly

**In case size > 7.1/4", pn = 55508-1

Slip assemblies HYC, MYC & YC series

Item	Description	Qty	HYC	Qty	MYC & YC
	3.1/2" Slip size		**201353Y**		
33	Slip	4	201352Y		
34	Insert	24	16441		
35	Insert retainer	4	201354		
35a	Spacer				
36	Slip setting ring	1	30216		
37*3	Guide plate set	1	26827-1		
	3.1/2" x 2.7/8" Slip size		**201355Y**		
33	Slip	4	201352Y		
34	Insert	24	201356		
35	Insert retainer	4	201354		
35a	Spacer				
36	Slip setting ring	1	201357		
37*3	Guide plate set	1	201358		
	4.1/2" x 3.1/2" Slip size		**55509Y**		**34931Y**
33	Slip	4	55303Y	4	24072Y4
34	Insert	24	24779	16	24779
35	Insert retainer	4	30214	4	30214
35a	Spacer			8	24506
36	Slip setting ring	1	55516	1	34932
37*3	Guide plate set	1	26827-1	1	26827-1
	4.1/2" x 4" Slip size		**55510Y**		**26830Y**
33	Slip	4	55303Y	4	24072Y4
34	Insert	24	24781	16	24781
35	Insert retainer	4	30214	4	30214
35a	Spacer			8	24506
36	Slip setting ring	1	55517	1	30209
37*3	Guide plate set	1	26827	1	26827
	4.1/2" Slip size		**55511Y**		**24072Y5**
33	Slip	4	55303Y	4	24072Y4
34	Insert	24	BJ16408	16	BJ16408
35	Insert retainer	4	30214	4	30214
35a	Spacer			8	24506
36	Slip setting ring	1	55518	1	30219
37*3	Guide plate set	1	24071-4	1	24071-4
	5.1/2" x 4.1/2" Slip size		**55513Y1**		
33	Slip	4	55304Y		
34	Insert	36	24785		
35	Insert retainer	4	30214		
35a	Spacer				
36	Slip setting ring	1	55518		
37*3	Guide plate set	1	24071-4		

*3 = Not part of slip assembly

Item	Description	Qty	HYC	Qty	MYC & YC
	5.1/2" x 5" Slip size		**55512Y**		**24072Y7**
33	Slip	4	55304Y	4	24072Y
34	Insert	36	24783	16	24783
35	Insert retainer	4	30221	4	30221
35a	Spacer			8	24506
36	Slip setting ring	1	55519	1	30220
37*3	Guide plate set	1	24071	1	24071
	5.1/2" Slip size		**55513Y**		**24072Y2**
33	Slip	4	55304Y	4	24072Y
34	Insert	36	BJ 16407	16	BJ16407
35	Insert retainer	4	30224	4	30224
35a	Spacer			8	24506
36	Slip setting ring	1	55520	1	30223
37*3	Guide plate set	1	24071-1	1	24071-1
	7" x 5.3/4 " Slip size		**55515Y2**		
33	Slip	4	55305Y		
34	Insert	48	29254		
35	Insert retainer	4	30227		
35a	Spacer				
36	Slip setting ring	1	55520-1		
37*3	Guide plate set	1	24071-7		
	7” x 6”		**55515Y1**		
33	Slip	4	55305Y		
34	Insert	48	24785		
35	Insert retainer	4	30227		
35a	Spacer				
36	Slip setting ring	1	55520-1		
37*3	Guide plate set		24071-5		
	7" x 6.5/8 " Slip size		**55514Y**		**24077Y7**
33	Slip	4	55305Y	4	24077Y
34	Insert	48	24748	24	24748
35	Insert retainer	4	30227	4	30227
35a	Spacer			12	24506
36	Slip setting ring	1	55521	1	30226
37*3	Guide plate set	1	24071-3	1	24071-3
	7" Slip size		**55515Y**		**24077Y1**
33	Slip	4	55305Y	4	24077Y
34	Insert	48	BJ16407	24	BJ16407
35	Insert retainer	4	30230	4	30230
35a	Spacer			12	24506
36	Slip setting ring	1	55522	1	30229
37*3	Guide plate set	1	24071-2	2	24071-2

*3 = Not part of slip assembly

	7.5/8" x 6.5/8" Slip size		**70009Y2**	
33	Slip	4	55305Y1	4
34	Insert	48	25474-1	
35	Insert retainer	4	70011	
35a	Spacer			
36	Slip setting ring	1	200217	
37*3	Guide plate set	1	24071-3	
	7.5/8" x 7" Slip size		**70009Y1**	
33	Slip	4	55305Y1	
34	Insert	48	26750-1	
35	Insert retainer	4	70011	
35a	Spacer			
36	Slip setting ring	1	200440	
37*3	Guide plate set	1	24071-2	
	7.5/8" x 7.1/4" Slip size		**70009Y5**	
33	Slip	4	55305Y1	
34	Insert	48	39287-1	
35	Insert retainer	4	70011	
35a	Spacer			
36	Slip setting ring	1	200440-1	
37*3	Guide plate set	1	24071-9	
	7.5/8" Slip size		**70009Y**	
33	Slip	4	56305Y1	
34	Insert	48	70010	
35	Insert retainer	4	70011	
35a	Spacer			
36	Slip setting ring	1	70012	
37*3	Guide plate set	1	24071-6	
	7.3/4" Slip size		**70009Y4**	
33	Slip	4	55305Y1	
34	Insert	48	32477-1	
35	Insert retainer	4	70011	
35a	Spacer			
36	Slip setting ring	1	201546	
37*3	Guide plate set	1	24071-6	

*3 = Not part of slip assembly

HYT series

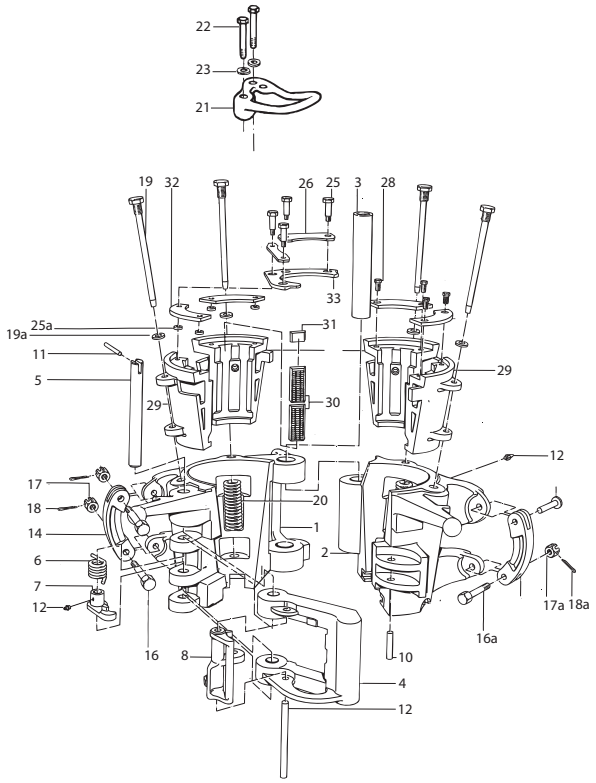

Parts list HYT series

Item	Description	Qty	Part number	Item	Description	Qty	Part number
1	Body	1	39215Y	17	Link block nut	2	50512-C
2	Door	1	39205Y	17a	Link block nut	2	50514-C
3	Hinge pin	1	39239	18	Cotter pin	2	51402-12
4	Latch	1	39162Y	18a	Cotter pin	2	51402-16
5	Latch pin	1	39238	19	Slip bolt	4	52321
6	Latch spring	1	39240	19a	Lock washer	4	51112-C
7	Latch cam	1		20	Slip spring	4	52539-1
8	Latch lock	1	39161	21	Guide plate	1	51090
9	Latch lock pin	1	39251	22	Guide plate screw	2	50010-18-C8D
9a	Latch lock spring	1	39241 not shown	23	Guide plate lockwasher	2	50910-C
10	Door lug pin	1		24*3	Lockwire	AR	947879
11	Latch pin retainer	1	39254	25*3	Hex head capscrew	4 *2	50012-24-C8D*2
11a	Hinge pin retainer	1	39253 not shown	25a	Lockwasher	4	50912-C
12	Grease fitting	1	53201	26*3	Set.ring ret. 31/2" slip	2	
13	Grease fitting	1		26*3	Set.ring ret. 27/8" slip	2	
14	Link block	2	9519	27*3	Set.ring bushing	4 *2	51089
16	Link block bolt	2	8145	28*3	Hex head capscrew	4 *2	50012-12-C8D
16a	Link block bolt	2	939099-97				

*1 3 Required for HYT *2 2 Required for HYT

*3 Part of slip assembly *4 Part of slip assembly in YT

YT series

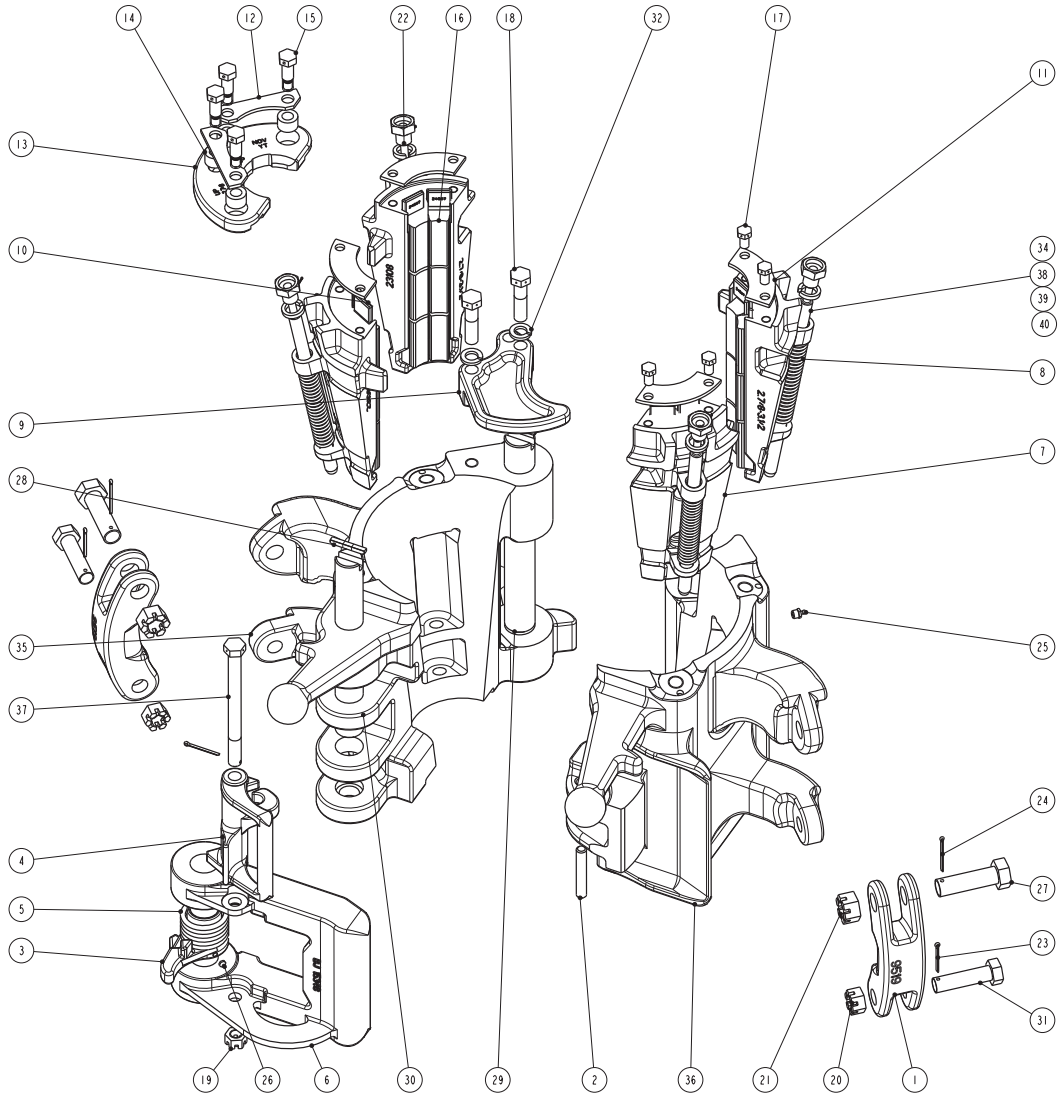
14
12
15
22
16
18
32
17
11
13
10
34
38
39
40
8
9
7
28
35
25
37
24
4
27
5
23
3
31
19
26
6
30
29
2
36
21
20
1

Parts list YT series

Item	Part Number	Name	Qty
1	9519	Link block elev	2
2	12529	Door lug pin MG-YC-YT	1
3	12946	Latchcam YT-YC-elevator	1
4	12972	Latch lock YT-YC-elevator	1
5	12978	Latch spring YT-YC-elevator	1
6	15348Y	Latch PSL1 YC+YT-elevator	1
7	23108-M	Slip, 3.1/2" tubing, YT slip elevator	4
8	23113	Slip spring YT-elevator	4
9	23630	Guide plate YT-elevator	1
10	24507	Spacer - slip insert - YT elevator	8
11	27530	Retainer insert	4
12	27546	Retainer setting ring - YT elevator slips	2
13	27695	2.7/8" slip setting ring	1
14	27696	Rubber bushing for YT slip setting ring	4
15	27697	Shoulder screw, YT setting ring	4
16	30358	3.1/2" to 2.7/8" BJ reducing insert	24
17	50007-6-C8D	Screw, cap-hex HD (UNC 7/16")	4
18	50010-20-C8D	Screw, cap-hex HD drilled T	2
19	50510-C	Nut, hex-sltd (UNC-2B)	1
20	50512-C	Nut, hex-sltd, (UNC-2B)	2
21	50514-C	Nut, hex-sltd, (UNC-2B)	2
22	51112-C	Washer,lock,hi-collar	4
23	51402-12	Cotter Pin	3
24	51402-16	Cotter pin	2
25	53201	Grease fitting, straight, 1/8"	1
26	53204	Grease fitting, straight	1
27	939099-97	Hex.agon head cap screw, class 2	2
28	32918	Lock bar RGG/TA35 elevator	2
29	50006579	Hinge Pin YT Elevator	1
30	50006583	Latchpin YT elevator	1
31	10146878	Screw, cap-hex-HD drilled shank 3/4"	2
32	50910-C	Washer, lock-regular	2
34	50505	Nut-hex-slotted 5/16-18	4
35	50006580	Machining Body 1.1/4 - 3.1/2" YT	1
36	50006581	Machining Door 1.1/4 - 3.1/2" YT	1
37	50006585	Screw, cap-Hex. HD 5/8"-11" UNC	1
38	51401-4	Cotter pin 0.062 x 1/2	4
39	50003695	Slip pin for YT elevator	4
40	50003699-2	Slip retainer bolt for Y series	4

Slip assemblies YT & HYT series

Item	Description	Qty	YT	Qty	HYT
	2.7/8" Slip size		**23108Y4**		**39259Y2**
29	Slip	4	23108Y2	4	39175Y
30	Insert	12	24773	16	24773
31	Insert spacer	4	24508		
32	Insert retainer	4	27451	4	39246
33	Setting ring	1	27695	1	39214-2
	2.7/8" x 2.3/8" Slip size		**23108Y6**		**39259Y4**
29	Slip	4	23108Y2	4	39175Y
30	Insert	12	29255	16	29255
31	Insert spacer	4	24508		
32	Insert retainer	4	27451	4	39246
33	Setting ring	1	27694	1	39214-1
	2.7/8"x 2.1/16" Slip size		**23108Y7**		
29	Slip	4	23108Y2		
30	Insert	12	29256		
31	Insert spacer	4	24508		
32	Insert retainer	4	27451		
33	Setting ring	1	27812		
	2.7/8" x 2" Slip size		**23108Y8**		
29	Slip	4	23108Y2		
30	Insert	12	29256		
31	Insert spacer	4	24508		
32	Insert retainer	4	27451		
33	Setting ring	1	27821		
	2.7/8" x 1.900" Slip size		**23108Y9**		
29	Slip	4	23108Y2		
30	Insert	12	29257		
31	Insert spacer	4	24508		
32	Insert retainer	4	27451		
33	Setting ring	1	27811		
	2.7/8" x 1.600" Slip size		**23108Y10**		
29	Slip	4	23108Y2		
30	Insert	12	29258		
31	Insert spacer	4	24508		
32	Insert retainer	4	27451		
33	Setting ring	1	27810		
	2.7/8" x 1.315" Slip size		**23108Y11**		
29	Slip	4	23108Y2		
30	Insert	12	29259		
31	Insert spacer	4	24508		
32	Insert retainer	4	27451		
33	Setting ring	1	29001		

Item	Description	Qty	YT	Qty	HYT
	3.1/2" Slip size		**23108Y5**		**39258Y2**
29	Slip	4	23108Y	4	39174Y
30	Insert	24	24774	32	24774
31	Insert spacer	8	24507		
32	Insert retainer	4	27530	4	39247
33	Setting ring	1	27813	1	39214-3
	3.1/2" x 2.7/8" Slip size		**23108Y3**		**39258Y4**
29	Slip	4	23108Y	4	39174Y
30	Insert	24	30358	32	30358
31	Insert spacer	8	24507		
32	Insert retainer	4	27530	4	39247
33	Setting ring	1	27695	1	39214-2

Slip assemblies YT & HYT series weights

Slip Assembly	Weight		Slip Assembly	Weight	
YT	**lbs**	**kg**	**HYT**	**lbs**	**kg**
23108Y5	64	29	39258Y2	141	64
23108Y3	76	34	39258Y4	170	72
23108Y4	76	34	39259Y2	158	72
23108Y6	79	36	39259Y4	170	72
23108Y7	81	37			
23108Y8	81	37			
23108Y9	84	38			
23108Y10	86	38			
23108Y11	86	39			

MYT series

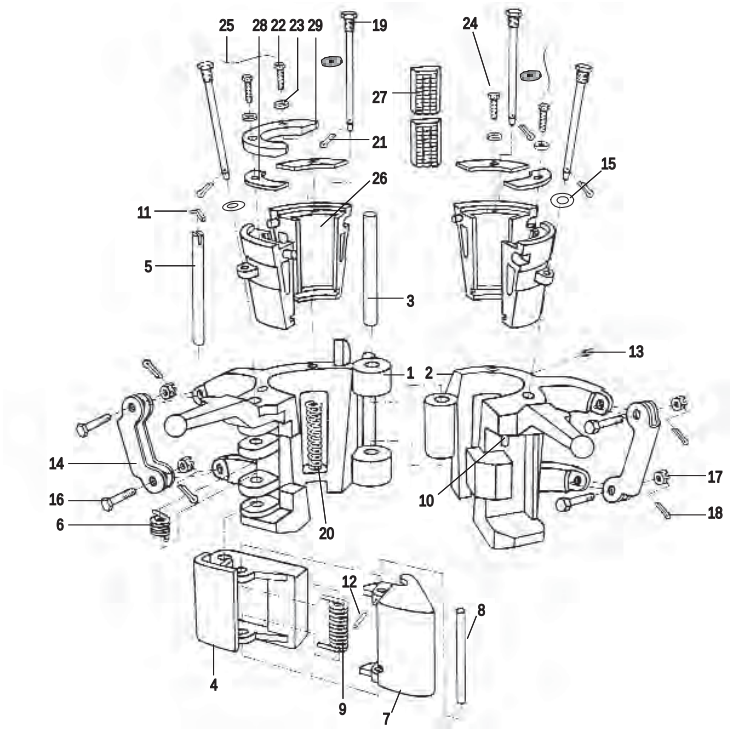

Parts list MYT series

Item	Description	Qty	MYT	Item	Description	Qty	MYT
1	Body	1	29329Y	14	Link block	2	29337
2	Door	1	29330Y	15	Lockwasher	4	51110-C
3	Hinge pin	1	29333	16	Link block bolt	4	939099-65
4	Latch	1	30652Y	17	Link block nut	4	50510-C
5	Latch pin	1	29334	18	Cotter pin	4	51402-12
6	Latch spring	1	29338	19	Slip pin /bolt	4	29336
7	Latch lock	1	30653	20	Slip spring	4	29340
8	Latch lock pin	1	29335	21	Cotter pin	4	
9	Latch lock spring	1	29349	22*	Setting ring screw	2	29347
10	Latch lock door pin	1	30841	23*	Flatwasher	2	50810-N-C
11	Latch pin retainer	1	947129-238	24*	Hex head capscrew	2	50010-8-C8D
12	Latch lock pin retainer	1	947129-151	25	Lockwire	AR	947879
13	Grease fitting	1	53201				
14	Link block	2	29337				
15	Lockwasher	4	51110-C				
16	Link block bolt	4	939099-65				
17	Link block nut	4	50510-C				
18	Cotter pin	4	51402-12				
19	Slip pin /bolt	4	29336				
20	Slip spring	4	29340				
21	Cotter pin	4					
22*	Setting ring screw	2	29347				
23*	Flatwasher	2	50810-N-C				
24*	Hex head capscrew	2	50010-8-C8D				
25	Lockwire	AR	947879				

*Part of slip assembly

Slip assemblies part numbers MYT series

Item	Description	Qty	MYT	Item	Description	Qty	MYT
	2.7/8" Slip size		**29343Y1**		**2.1/16" x 1.900" Slip size**		**29343Y5**
26	Slip	4	29343Y10	26	Slip	4	29343Y10
27	Insert	8	24773	27	Insert	8	29257
28	Insert retainer	4	29344	28	Insert retainer	4	29344
29	Setting ring	1	29348	29	Setting ring	1	29352
	2.7/8" x 2.3/8" Slip size		**29343Y2**		**2.1/16" x 1.660" Slip size**		**29343Y6**
26	Slip	4	29343Y10	26	Slip	4	29343Y10
27	Insert	8	29255	27	Insert	8	29258
28	Insert retainer	4	29344	28	Insert retainer	4	29344
29	Setting ring	1	29345	29	Setting ring	1	29353
	2.1/16" Slip size		**29343Y3**		**2.1/16" x 1.315" Slip size**		**29343Y7**
26	Slip	4	29343Y10	26	Slip	4	29343Y10
27	Insert	8	29256	27	Insert	8	29259
28	Insert retainer	4	29344	28	Insert retainer	4	29344
29	Setting ring	1	29350	29	Setting ring	1	29354
	2.1/16" x 2" Slip size		**29343Y4**		**2.1/16" x 1.900" Slip size**		**29343Y5**
26	Slip	4	29343Y10				
27	Insert	8	29256				
28	Insert retainer	4	29344				
29	Setting ring	1	29351				

18° center latch elevators G serie

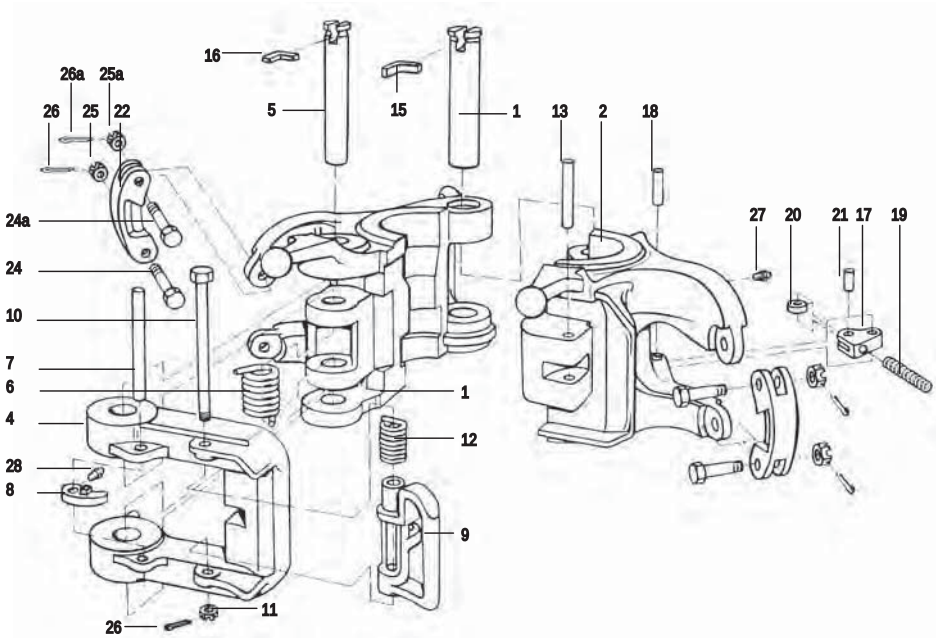

Parts list G-series

			MG	RGG	RGA	GA	GGA	MGG	GG	HGG
Item	**Description**	**Qty**	**30157Y***	**200680Y***	**201360Y***	**200034Y***	**201385Y***	**35005Y***	**31068Y***	**70013Y***
1	Body	1	11761Y1	200681Y	200681Y	34904Y	31069Y1	34904Y	31069Y1	30441Y
2	Door	1	11762Y1	23568Y2	23568Y2	34905Y	31070Y	34905Y	31070Y	30447Y
3	Hinge pin	1	26813	200683	200683	34908	33998	34908	33998	30553
4	Latch	1	BJ11763Y	13151Y	13151Y	34906Y	31071Y	34906Y	31071Y	30460Y
5	Latch pin	1	26814	200684	200684	34907	33999	34907	33999	30613
6	Latch spring	1	11766	13155	13155	34909	18416	34909	18416	202180
7	Latch spring stop	1		13185	13185	13185	13185	13185	13185	31215
8	Latch cam	1	11581							
9	Latch lock	1	11764	13152	13152	13152	13152	13152	13152	13152-1
10	Latch lock bolt	1	10691571-001	15101	15101	15101	15101	15101	15101	31138
11	Latch lock bolt nut	1	50508-C	50512-C	50512-C	50512-C	50512-C	50512-C	50512-C	50512-C
12	Latch lock spring	1		13188	13188	13188	13188	13188	13188	13188
13	Door lug pin	1	12529	BJ13190	BJ13190	BJ13190	BJ13190	BJ13190	BJ13190	31216
15	Hinge pin retainer	1		32892	32892	34910	31074	34910	31074	30609
16	Latch pin retainer	1	8156	32918	32918	34911	32892	34911	32892	36901
17**	Door catch arm	1		12732	12732	12732	12732	12732	12732	12732
18**	Door catch arm pin	1		12916-1	12916-1	12916-1	12916-1	12916-1	12916-1	12916-1
19**	Door catch spring	1		9561	9561	9561	9561	9561	9561	9561
20**	Roller	1		12734	12734	12734	12734	12734	12734	12734
21**	Roller pin	1		12735	12735	12735	12735	12735	12735	12735
22	Link block	2	26817	9519	9519	9519	9519	9519	9519	30492
24	Link block bolt	2	8145	8145	8145	8145	8145	8145	8145	8145
24a		2	8145	939099-97	939099-97	939099-97	939099-97	939099-97	939099-97	939099-97
25	Link block nut	2	50512C	50512C	50512C	50512C	50512C	50512C	50512C	50512C
25a		2	50512C	50514C	50514C	50514C	50514C	50514C	50514C	50514C
26	Cotter pin	3	51402-10	51402-12	51402-12	51402-12	51402-12	51402-12	51402-12	51402-12
26a		2	51402-12	51402-16	51402-16	51402-16	51402-16	51402-16	51402-16	51402-16
27	Grease fitting	3	53201	53201	53201	53201	53201	53201	53201	53201
28	Grease fitting	1	53204							

Note:

Wear bushing part number: 200022-* or 200070-* (for HGG 200062Y)

* See bore code charts

Collar type side door elevators X series

SLX-series.

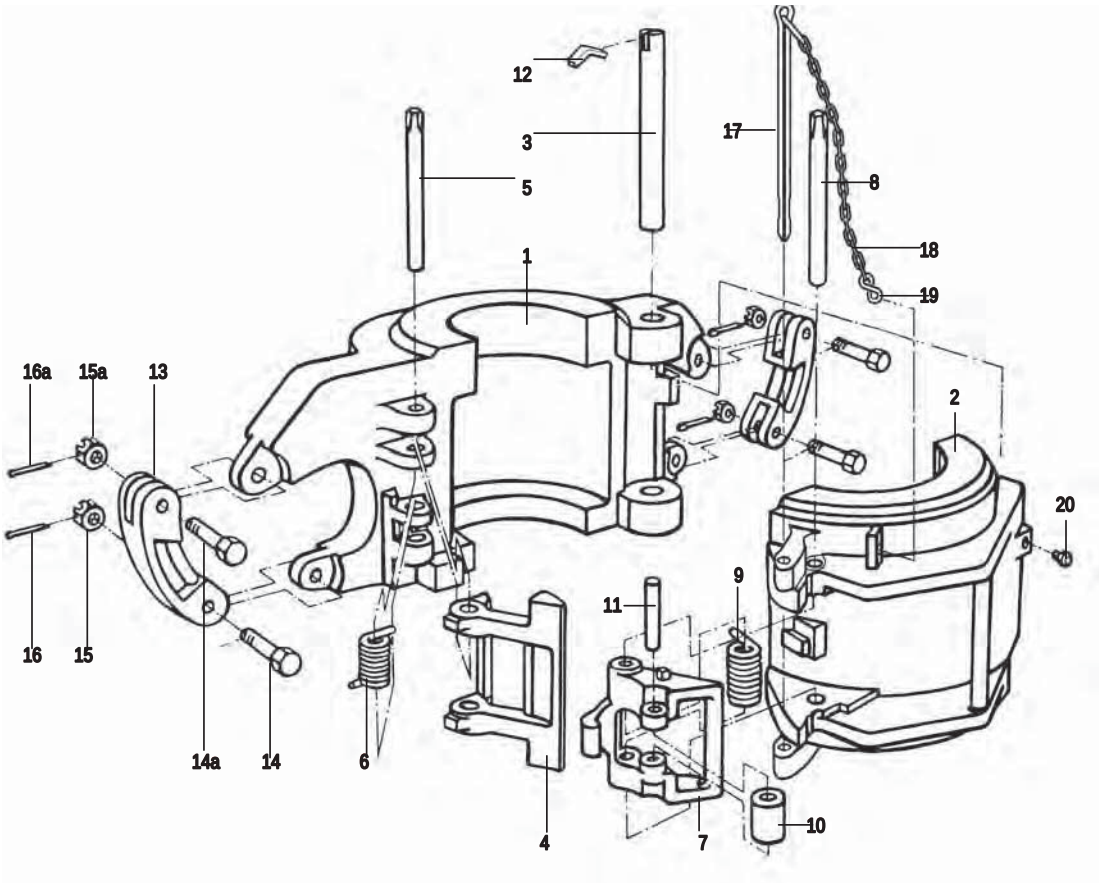

Parts list SLX series

Item	Description	Qty	SLX 65 1.660"–2.7/8" 33734Y*	SLX 100 2.3/8"–2.7/8" 33693Y*	SLX 100 3.1/2"–4" 33809Y*	SLX 100 4.1/2"–5.1/2" 33854Y*	SLX 150 5.1/2"–8.5/8" 31239Y*	SLX 150 9.5/8"–10.3/4" 33950Y*	SLX 150 11.3/4"–13.5/8" 33982Y*	SLX 150 16" 34087Y*	SLX 150 18.5/8"-20" 33632Y*	SLX 250 21"–24.1/2" 34175Y*
1	Body	1	33735Y	33694Y	33810Y	33855Y	31254Y	33951Y	33983Y	34318Y	33627Y	34176Y
2	Door	1	33736Y	33695Y	33811Y	33856Y	33255Y	33952Y	33984Y	34320Y	33633Y	33177Y
3	Hinge pin	1	32424-3	32424-5	34612	34613	34611	33953	33985	33646	33646	34179
4	Latch	1	33697Y	33697Y	33813Y	33813Y	31331Y	31331Y	31331Y	33634Y	33634Y	33634Y
5	Latch pin	1	33700-4	33700-4	29980-3	29980-3	32424-3	32424-3	32424-3	33645	33645	3645
6	Latch spring	1	33703	33703	33818	33818	31383	31383	31383	33657	33657	33657
7	Latch lock	1	33696	33696	33812	33812	31332	31332	31332	33635	33635	33635
8	Latch lock pin	1	33700-4	33700-4	29980-3	29980-3	29980-4	29980-4	29980-4	50713	50713	50713
9	Latch lock spring	1	33701	33701	33816	33816	31404	31404	31404	33658	33658	33658
10	Roller	1	33702	33702	33817	33817	31407	31407	31407	31407	31407	31407
11	Roller pin	1	33698	33698	31584	31584	31584	31584	31584	31584	31584	31584
12	Lock bar	1	34614	34614	34614	32918	34614	32918	32892	32892	32892	31074
13	Link block	2	23404	32430	32430	32430	9519	9519	9519	9519	9519	9519
14	Link block bolt	2	23406	939099-65	939099-65	939099-65	8145	8145	8145	8145	8145	8145
14a		2	23406	939099-65	939099-65	939099-65	939099-97	939099-97	939099-97	939099-97	939099-97	939099-97
15	Link block nut	2	50508-C	50510-C	50510-C	50510-C	50512-C	50512-C	50512-C	50512-C	50512-C	50512-C
15a		2	50508-C	50510-C	50510-C	50510-C	50514-C	50514-C	50514-C	50514-C	50514-C	50514-C

16	Cotter pin	2	51402-12	51402-12	51402-12	51402-12	51402-12	51402-12	51402-12	51402-12	51402-12	51402-12
16a		2	51402-12	51402-12	51402-12	51402-12	51402-16	51402-16	51402-16	51402-16	51402-16	51402-16
17	Latch lock safety pin	1	50006097	50006097	202850-3	202850-3	202850-1	202850-1	202850-1	202850-4	202850-4	202850-4
18	Chain	1	59001008-3	59001008-3	59001008-3	59001008-3	59001008-3	59001008-3	59001008-3	59001008-3	59001008-3	59001008-3
19	S-hook	2	948051-2	948051-2	948051-2	948051-2	948051-2	948051-2	948051-2	948051-2	948051-2	948051-2
20	Grease fitting	1	53201	53201	53201	53201	53201	53201	53201	53201	53201	53201

* See bore code charts

For 24” - 30” 150 sTon elevator see drawing 52755 chapter Drawings.

SMX series

Major parts SMX

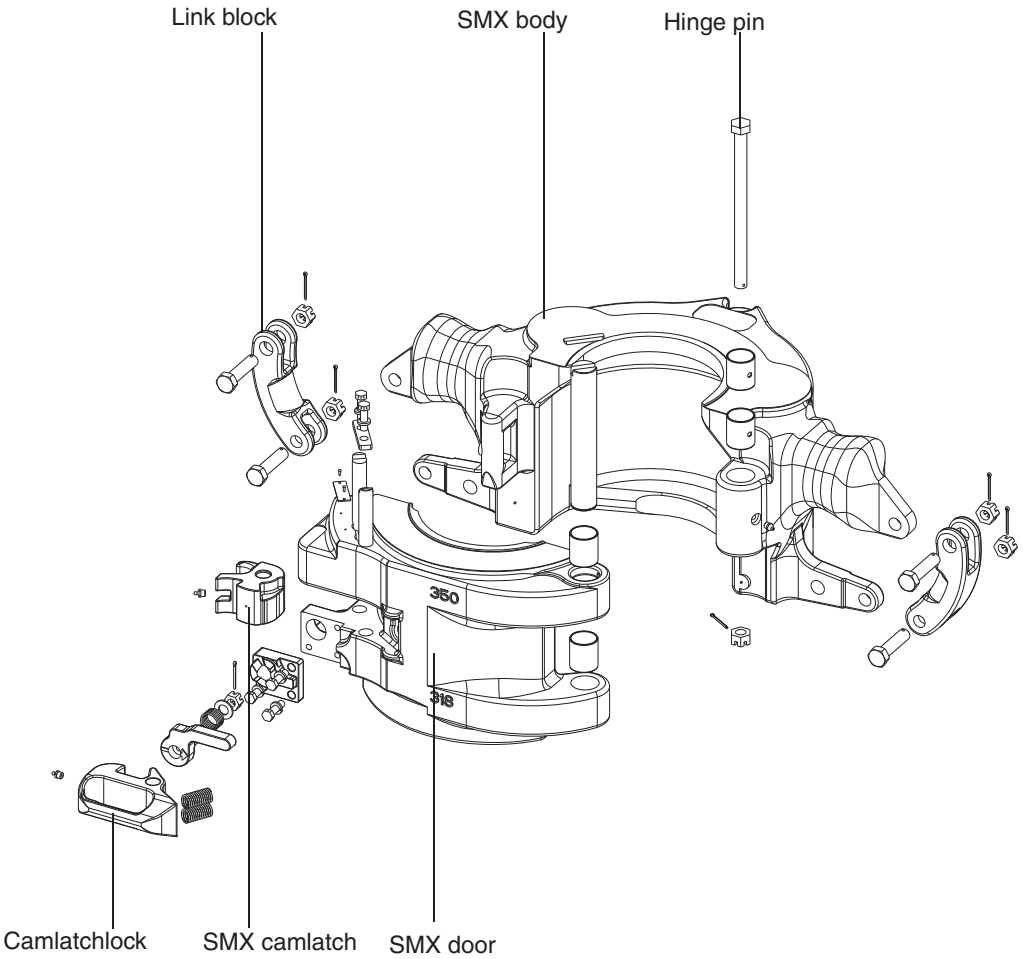

Parts list for SMX series

See drawings.

Link handle kit

The Link handle kit can be used in combination with a SMX or other kind of Manual Elevator side-door type. It is developed for easier and safer closing the elevator. Part number 50006435. will fit on 350 and 250 ton links.

Parts link handle kit

Part number	Qty	Description
50006409	1	SMX link handle front
50006410	1	SMX link handle, back
51106-C	2	Washer, lock-hi-collar
50006434	1	Safety cable
980257-16	2	Screw, cap hex
980257-12	2	Screw, cap hex
51433-8	2	Pin, cotter

SBX7

For partnumbers see drawing 50001270.

SX-series

NOV "SX" type elevators are conventional size door latch collar type elevators for handling a single joint of casing or tubing. The SX type elevator has a 250 up to 500 ton capacity covering pipe sizes from 9.5/8” - 13.3/8” OD.

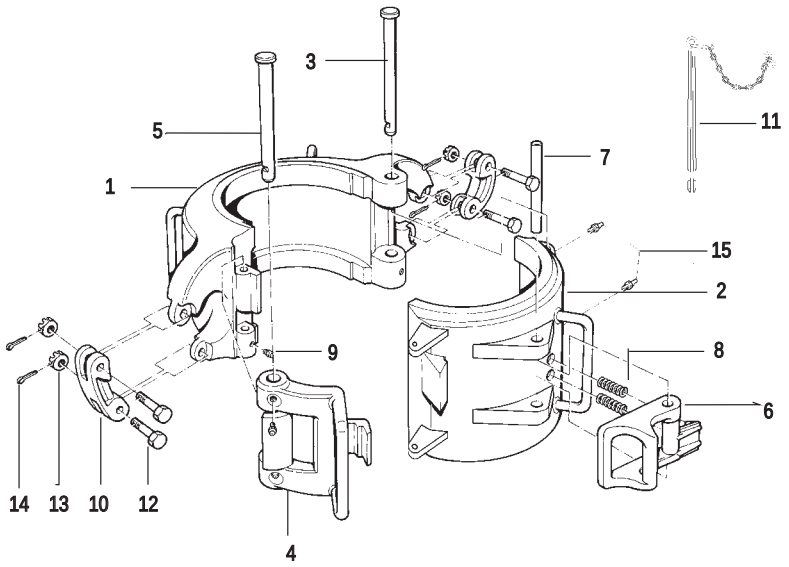

Parts list SX series

Item	Description	Qty	SX250 18 5/8"-20" 30598Y*	SX500 9 5/8"-13 3/8" 29964Y*	SX500 16” 30729Y*
1	Body	1	30596Y	29943Y	30730Y
2	Door	1	30595Y	29955Y	30731Y
3	Hinge pin	1	29956	29956	29956
4	Latch	1	30597Y	29945Y	30597Y2
5	Latch pin	1	29951	29951	30696
6	Latch lock	1	6021	6021	6021
7	Latch lock pin	1	6027	6027	6027
8	Latch lock spring	2	30657	30657	30657
9	Set screw	2	50712-8-B-C	50712-8-B-C	50712-8-B-C
10	Link block	2	9519	9519	9519
11	Latch lock safety pin assembly	1	203429-1	203430-1	203430-1
11a	Lock pin	1	203431	203431	203431
11b	S-hook	1	948051-2	948051-2	948051-2
11c	Ring welded	1	979856-2	979856-2	979856-2
11d	Chain	0.51			
11d	Chain	0.59	59001008-3	59001008-3	59001008-3
12	Link block bolt	2	8145	8145	8145
12a		2	939099-97	939099-97	939099-97
13	Link block nut	2	50512-C	50512-C	50512-C
13a		2	50514-C	50514-C	50514-C
14	Cotter pin	2	51402-12	51402-12	51402-12
14a		2	51402-16	51402-16	51402-16
15	Grease fitting	4	53201	53201	53201

* See bore code charts

SLX-DD-Series

For SLX-DD partnrs see dwg 30598 for SLX-DD 18.5/8” - 20” and 52755 for SLX-DD 24” - 30”

Single joint elevators

SPL series

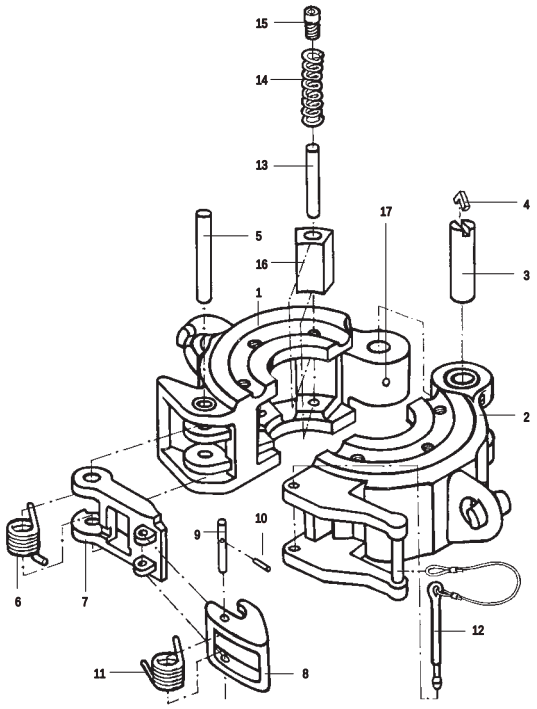

Parts list SPL

Item	Description	Qty	5° SPL 200008Y*	5° SPL 200010Y*	5° SPL 200012Y*	5° SPL 200013Y*	12° SPL 200014Y*	18° SPL 200009Y*	18° SPL 200011Y*
1	Body	1	36182	36386	36263	36263	36182	36182	36386
2	Door	1	200031	200032	200033	200033	200031	200031	200032
3	Hinge pin	1	200050	200050	200050	200050	200050	200050	200050
4	Hinge pin retainer	1	200052	200052	200052	200052	200052	200052	200052
5	Latch pin	1	BJ33035	BJ33035	BJ33035	BJ33035	BJ33035	BJ33035	BJ33035
6	Latch spring	1	7829-1	7829-1	7829-1	7829-1	7829-1	7829-1	7829-1
-	Safety latch assembly	1	70497	70497	70497	70497	70497	70497	70497
7	Safety latch	1	200026Y	200026Y	200026Y	200026Y	200026Y	200026Y	200026Y
8	Latch lock	1	200027Y	200027Y	200027Y	200027Y	200027Y	200027Y	200027Y
9	Latch lock pin	1	70494	70494	70494	70494	70494	70494	70494
10	Latch lock pin retainer	1	51602-6-C	51602-6-C	51602-6-C	51602-6-C	51602-6-C	51602-6-C	51602-6-C
11	Latch lock spring	1	70495	70495	70495	70495	70495	70495	70495
12	Latch retaining pin assy	1	34439	34439	34439	34439	34439	34439	34439
13	Slip pin	6	203428-28	203428-28	51206-28	51206-28	203428-28	203428-28	203428-28

14	Slip spring	6	945035-708	945035-708	945035-708	945035-708	945035-708	945035-708	945035-708
15	Pipe plug	6	53000-4	53000-4	53000-4	53000-4	53000-4	53000-4	53000-4
16	Slip	6	36184-*	36248-*	36186-*	36187-*	36184-*	36184-*	36248-*
17	Grease fitting	1	53201	53201	53201	53201	53201	53201	53201

*See bore code charts

SJL series

The SJL are conventional collar type center latch elevators with 5 sTon rating up to 11” and 7.5 sTon rating from 11.1/8” up to 30” and are designed to handle collar type tubular from size 2.3/8” to 30” For p/n see drawings in chapter Drawings..

SJX series

The SJX-single joint elevator is designed for running single joints of tubing and casing from the V-door to well center. The SJX-elevator is recommended to be used underneath the CRT Casing Running Tool. It enables the derrick-man on the monkey-board to open the elevator from 2 sides, depending on how the elevator is positioned when stopped.

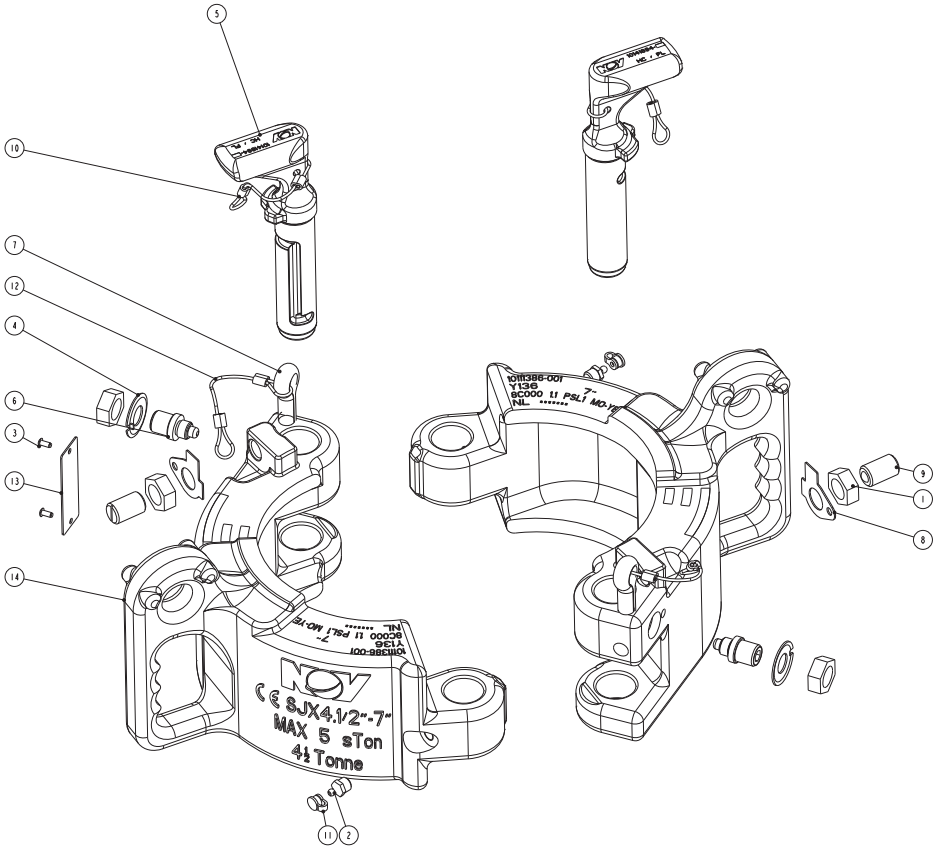

Parts list for SJX

Item	Description	Qty	2.3/8" - 4.1/2" 50004929	4.1/2" - 7" 50004931	7" - 10" 50004933	10" - 14" 50004935
1	Jam nut, hex 5/8 UNC steel pltd	4	50310-C	50310-C	50310-C	50310-C

2	Grease fitting	2	53201	53201	53201	53201
3	Screw, drive	2	53301-6-5	53301-6-5	53301-6-5	53301-6-5
4	Lock washer	2	979485-15	979485-15	979485-15	979485-15
5	Lock key hinge pin	2	10141894-001*	10141894-001*	10141894-001*	10141894-001*
6	Lock screw	2	10141903-001	10141903-001	10141903-001	10141903-001
7	Cotter pin special, SJX	2	10141931-001	10141931-001	10141931-001	10141931-001
8	Lock washer SS, 5/8"	2	10852396-001	10852396-001	10852396-001	10852396-001
9	Ball nose spring plunger	2	59000251-6	59000251-6	59000251-6	59000251-6
10	NICOPRESS LASHULL 2MM	8	59000374	59000374	59000374	59000374
11	Grease fitt. dust cap, Yellow, l	2	59000507	59000507	59000507	59000507
12	Wire rope 2mm SS316, 7x7	0.8	979438-2	979438-2	979438-2	979438-2
13	Info & read manual plate	1	10140057-001	10140057-001	10140057-001	10140057-001
14	Body	2	10704300-001	10704318-001	10704328-001	10704335-001

* In case the Lock key hinge pin (p/n 10141894-001) has to be replaced, it is only available in a Lanyard kit p/n 10850208-001.

DSJX

Major components

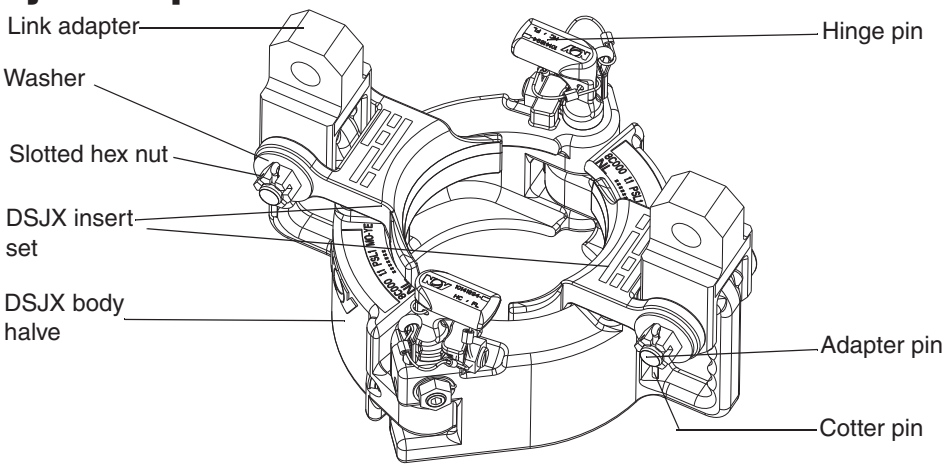

Parts list for DSJX with inserts

Description	Qty	3.25/32" - 6.1/8" - 50004955
Nut, hex-slotted 3/4 -10	2	50512-C
Washer, flat 3/4”, regular	2	50812-R-C
Cotter pin 3/16 x 2	2	51403-16
DSJX insert set	1	10731586
DSJX machining	1	10713115
Link adapter DSJX	2	10141966
DSJX adapter pin	2	10927805-001

Description	Qty	6.1/4" - 8.7/8" - 50004958
Nut, hex-slotted 3/4 -10	2	50512-C
Washer, flat 3/4”, regular	2	50812-R-C
Cotter pin 3/16 x 2	2	51403-16
DSJX insert set	1	10141990
DSJX machining	1	10713117
Link adapter DSJX	2	10141966
DSJX adapter pin	2	10927805-001

SJH-series

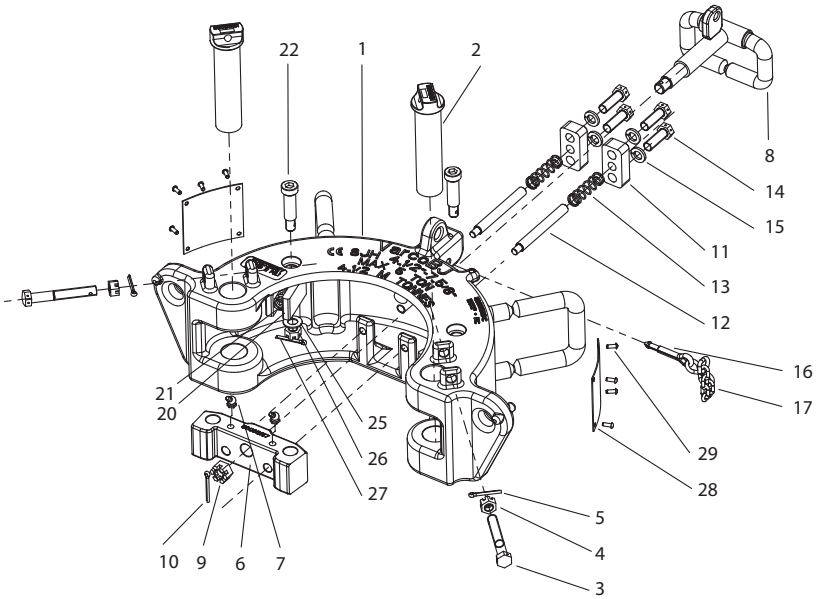

Parts list SJH-series

Ref. No	Description	Qty	2.3/8”- 4.1/2”	4.1/2” - 7.5/8”	7” - 10.3/4”
			50003135Y	**50003155Y**	**50003175Y**
1	Body	1	50003136Y	50003156Y	50003176Y
2	Hinge pin	2	50003181	50003181	50003181
3	Retainer bolt	2	50003184	50003184	50003184
4	Nut	2	50508-C	50508-C	50508-C
5	Cotter pin	2	51435-10	51435-10	51435-10
6	Latch	1	50003137	50003157	50003177
7	Grease fitting	2	53202	53202	53202
8	Latch handle	1	50003180	50003180	50003180
9	Nut	1	50510-C	50510-C	50510-C
10	Cotter pin	1	51435-12	51435-12	51435-12
11	Spring retainer	11	50003179	50003179	50003179
12	Guidance pin	12	50003178	50003178	50003178
13	Spring	13	979386-75	979386-75	979386-75
14	Head hex screw	4	50008-12-C8D	50008-12-C8D	50008-14-C8D
15	Lock washer	4	50908-C	50908-C	50908-C
16	Cotter pin	1	50004950	50004950	50004950
17	S-hook	1	948051-2	948051-2	948051-2
18	Chain	1	59001008-4	59001008-4	59001008-4
19	Chain attachment bail	1	50003185	50003185	50003185
20	Spring retainer	2	50003139	50003182-2	50003182-2
21	Spring	2	979386-D22940	979386-78	979386-78
22	Bolt	2	51708-18-CD	50003182-1	50003182-1
23	Reducer	2	56700-8-2-S		
24	Grease fitting	2	53201		
25	Nut	2		50808-C	50808-C
26	Washer	2		50808-N-C	50808-N-C
27	Cotter pin	2		51435-10	51435-10
28	Warning Plate	2	203263	201646	201646
29	Drive screw	8	53301-10-8	53301-10-8	53301-10-8

DC DOLLY

Partnumbers

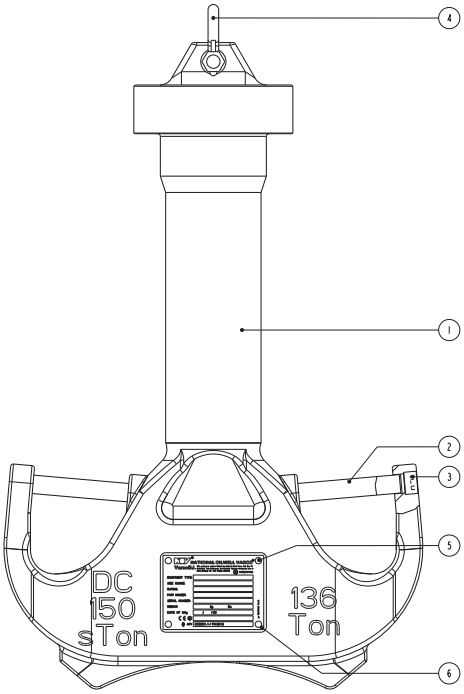

		31189Y1		31189Y3		31189Y5		31189Y7		31189Y9	
Part Description	**Nr**	**Part**	**Qty**	**Part**	**Qty**	**Part**	**Qty**	**Part**	**Qty**	**Part**	**Qty**
D.C.lift dolly PSL1	1	31189Y1	1	31189Y3	1	31189Y5	1	31189Y7	1	31189Y9	1
Pin D-C dolly ass'y.	2	5227	2	5227	2	5227	2	5227	2	5227	2
Plug,external pipe-countersunk Hex	3	53000-12	2	53000-12	2	53000-12	2	53000-12	2	53000-12	2
Anchor shackle	4	944515-1	1	944515-1	1	944515-1	1	944515-1	1	944515-1	1
Screw, drive	5	53301-10-6	4	53301-10-6	4	53301-10-6	4	53301-10-6	4	53301-10-6	4
Universal nameplate	6	50001003	1	50001003	1	50001003	1	50001003	1	50001003	1

		31189Y10		31189Y12		31189Y15		31189Y16		31189Y18	
Part Description	**Nr**	**Part**	**Qty**	**Part**	**Qty**	**Part**	**Qty**	**Part**	**Qty**	**Part**	**Qty**
D.C.lift dolly PSL1	1	31189Y10	1	31189Y12	1	31189Y15	1	31189Y16	1	31189Y18	1
Pin D-C dolly ass'y.	2	5227	2	5227	2	5227	2	5227	2	5227	2
Plug,external pipe-countersunk Hex	3	53000-12	2	53000-12	2	53000-12	2	53000-12	2	53000-12	2
Anchor shackle	4	944515-1	1	944515-1	1	944515-1	1	944515-1	1	944515-1	1
Screw, drive	5	53301-10-6	4	53301-10-6	4	53301-10-6	4	53301-10-6	4	53301-10-6	4
Universal nameplate	6	50001003	1	50001003	1	50001003	1	50001003	1	50001003	1

Spare parts

For Spare Parts contact NOV.

Drawings & test procedures

Material Safety Data Sheets

Factory applied grease, hydraulic fluid and preservation

MSDS grease	Autol TOP 2000
MSDS preservation	Castrol Rustilo DWX 32
MSDS Prem Tape	Premtape

Test procedures

Number	Name
TSEL-0018	SLX test specification
TSEL-0022	TA-series test specification
TSEL-0024	SJL/SPL test specification
TSEL-0027	SLX Double door test specification
TSEL-0052	Checklist safety pin kit SLX double door elevator
TSEL-0074	G-series test specification
TSEL-0076	Y-series test specification
TSEL-0129	SJX test specification
TSEL-0148	SJH test specification
TSEL-0161	SMX test specification
TSEL-0229	SX test specification
TSEL-0242	Test specification SBX7
TSEL-0194	Handling, storage and preservation

Wedge and Bore Measuring Instructions

Number	Name
10777146-PRO	Wedge/measuring instruction SX & SLX elevators
10773477-PRO	Wedge/measuring instruction TMA & TA elevators
10777148-PRO	Wedge/measuring instruction SJX elevators
10777142-PRO	Wedge/measuring instruction SMX elevators
10777152-PRO	Wedge/measuring instruction G elevators
10695825-PRO	Wedge/measuring instruction SJL elevators

Dimensional drawings

Number	Name
DD-50004955	D.D. DSJX 3.25/32” - 6.1/8”
DD-50004958	D.D. DSJX 6.1/4” - 8.7/8”
DD-50001270	DD SBX7 1250 with 9.5/8” riser
DD-50006430	Ass’y SMX 3.1/2” - 5.3/4” 150sTon
DD-50006438	Ass’y SMX 6” - 9” 150sTon/500 sTon links
DD-50006454	Ass’y SMX 9.1/8” - 13.3/8” 150sTon/500 sTon links

Wear data drawings

Number	Name
WD-000	Wear data general warning
WD-001	Tooljoint/bore wear table 18” bore type elevator
WD-010	Max. wear data for 18” center latch elevators to maintain 100% rating
WD-011	Inspection sheet 18° tapered bore
WD-020	Max. wear data for SJ/SP/SJL/SPL elevators to maintain 100% rating
WD-021	Max. collar wear data for SJ and SJL elevators to maintain 100% rating

WD-040	Max. wear data for SLX and SX elevators to maintain 100% rating
WD-041	Max. collar wear data for SX elevators to maintain 100% rating
WD-045	SMX wear data
WD-050	Max. wear data for TA and RA elevators to maintain 100% rating
WD-051	Max. collar wear data for A-type elevators to maintain 100% rating
WD-060	Max. wear data for slip type elevators to maintain 100% rating
WD-120	Wear dta SJX & DSJX Elevators
11021120-INF	DD & wear data SJL ass'y 24.5/8" - 30"
11020414-INF	DD & wear data SJL ass'y 20.5/8" - 24.1/2"
10968864-INF	DD & wear data SJL ass'y 14.1/8" - 20.1/2"
10878725-INF	DD & wear data SJL ass'y 11.1/8" - 14"
10900385-INF	DD & wear data SJL ass'y 7.7/8" - 11"
10965104-INF	DD & wear data SJL ass'y 5.5/8" - 7.3/4"
10938145-INF	DD & wear data SJL ass'y 2.3/8" - 5.1/2"
11021732-INF	Dolly wear data

Bore Code drawings

Number	Name
15316-2	Elevator bore chart for casing
15316-3	Elevator bore chart for tubing
15316-5	Elevator bore chart f/drill pipe having 18 shouldered tool joints
15316-6	DC Zip Bores
15316-8	Drill collars with lift plug

Drawings

Number	Name
50004955	DSJX assembly 3.25/32” - 6.1/8”
50004958	DSJX assembly 6.1/4” - 8.7/8”
50001105	2-way lifting sling, SWL 12 sT
50001270	Ass’y SBX7 - 1250 ton
50006582	Ass’y YT elevator 75 Ton 1.1/4” - 3.1/2”
50006426	Ass’y SMX 5.1/2” - 9” 250 sTon
50006430	Ass’y SMX 3.1/2” - 5.3/4” 150 sTon
50006438	Ass’y SMX 6” - 9” 150 sTon / 500 Ton links
50006440	Ass’y SMX 9.1/8” - 13.3/8” 350 sTon
50006450	Ass’y SMX 13.1/2” - 17.7/8” 250 sTon
50006454	Ass’y SMX 9.1/8” - 13.3/8” 150 sTon / 500 Ton links
50006460	Ass’y SMX 18” - 24.1/2” 250 sTon
50006740	Ass’y SMX 9.1/8” - 13.3/8” 250 sTon
30598	Ass’y 18.5/8” - 20” 250 sTon SX elevator
52755	Ass’y 24” - 30” 150 sTon SLX elevator
200022	Wearbushing GG/MGG/HGG elevator borecode 119-124, 798, 805
200056	GG-elevator with wearbushing
200060	HGG elevator with wearbushing
200062	HGG elevator with wearbushing
200070	Wearbushing HGG elevator
10708899-ASM	SJL ass’y 2.3/8” - 5.1/2”
70499	SJL 2.3/8” - 3.1/2”
70500	SJL 3.3/4” - 5.1/2”
70501	SJL 6”- 7.5/8”
70502	SJL 7.7/8” - 11”
10706896-ASM	SJL ass’y 5.3/4” - 7.3/4”
10705995-ASM	SJL ass’y 8” - 11”
10864561-ASM	SJL ass’y 11.1/8” - 14”
10704240-ASM	SJL ass’y 14.1/8” - 20.1/2””
10872064-ASM	SJL ass’y 20.5/8” - 24.1/2”
10876017-ASM	SJL ass’y 24.5/8” - 30”

CA drawings

Number	Name
CA-201	Critical areas elevator latches
CA-229	Critical areas left/right door double door collar elevator SLX
CA-231	Critical areas body/door single joint SP/SPL elevator
CA-300-M	Critical areas body centre latch “G” type elevator
CA-301-M	Critical areas door center latch “G” type elevator
CA-302-M	Critical areas body “Y” type elevator
CA-303-M	Critical areas door “Y” type elevator
CA-304-M	Critical areas body “A” type elevator
CA-305-M	Critical areas door “A” type elevator
CA-306-M	Critical areas body side door collar types
CA-307-M	Critical areas body side door collar types
CA-310-M	Critical areas body (D)SJX
CA-311-M	Critical area Lock key pin 50004940
CA-312-M	Body weldment for SJH 4.1/2” - 6.5/8”
CA-313-M	Critical area, body weldment SJH 2.3/8” - 4.1/2”
CA-314-C	Critical area, body casting for SJH 7” - 10.3/4”
CA-323-M	Critical area SMX door

CA-324-C	SMX camlatch
CA-325-C	SMX camlatchlock
CA-337-M	Critical area SMX body
10711571-INF	CA Body & Door SJL elevator

SAFETY DATA SHEET
AUTOL TOP 2000

1. Identification of the substance/preparation and of the company/undertaking

Date issued	21.07.2010
Product name	AUTOL TOP 2000
Use of the substance/preparation	Lubricating grease

Importer

Company name	Vedlikehold Industri Produkt AS
Postal address	Postboks 2003
Postcode	N-4392
Place name	SANDNES
Country	Norway
Tel	+47 51686030
Fax	+47 51686031
E-mail	mail@v-i-p.no
Website	www.autol.no
Prepared by	Developed/ revised by ApplySørco AS, Koppholen 6, Postbox 8040, N-4068 Stavanger, Norway.
Emergency telephone	Poisen informationcentral:+47 22 59 13 00

2. Hazards identification

Classification CLP	EUH 210
Description of hazard	The product has not been classified according to the legislation in force. msds for available for professionel users.

3. Composition/information on ingredients

Component name	Identification	Classification	Contents
Zincdialkyldithiophosfate	CAS no.: 68649-42-3	Xi, N; R38, R41, R51/53	< 2,5 %
Mineral oil			10 - 30 %

Column headings	CAS no. = Chemical Abstracts Service; EU (Einecs or Elincs number) = European inventory of Existing Commercial Chemical Substances; Ingredient name = Name as specified in the substance list (substances that are not included in the substance list must be translated, if possible). Contents given in; %, %wt/wt, %vol/wt, %vol/vol, mg/m3, ppb, ppm, weight%, vol%
HH/HF/HE	T+ = Very toxic, T = Toxic, C = Corrosive, Xn = Harmful, Xi = Irritating, E = Explosive, O = Oxidizing, F+ = Extremly flammable, F = Very flammable, N = Environmental hazard
Component comments	Contains in addition component which are not classified. Mineral oil contains DMSO<3% and therefor not classified as cancer.

4. First-aid measures

General	Remove affected person from source of contamination. Provide rest, warmth and fresh air.
Inhalation	Fresh air and rest. Get medical attention if any discomfort continues.
Skin contact	Wash skin with soap and water. Remove contaminated clothes and rinse skin thoroughly with water. Get medical attention if any discomfort continues. Clothes must be washed before re-use.
Eye contact	Immediately flush with plenty of water for up to 15 minutes. Remove any

	contact lenses and open eyes wide apart. Contact physician if irritation persists.
Ingestion	Immediately give a couple of glasses of water or milk, provided the victim is fully conscious. DO NOT INDUCE VOMITING! Get medical attention.

5. Fire-fighting measures

Suitable extinguishing media	Water spray, carbon dioxide, dry powder or polar resistant foam. If possible, remove containers exposed to heat or cool with water.
Improper extinguishing media	Water-jet.
Fire and explosion hazards	Not flammable Fire causes formation of toxic gases. Irritating gases/vapours/fumes of: Carbon dioxide (CO2). Carbon monoxide (CO).
Personal protective equipment	Fire brigade must use fresh-air helmet.

6. Accidental release measures

Personal precautions	Wear protective clothing as described in Section 8 of this safety data sheet. Avoid contact with skin and eyes. In case of spills, beware of slippery floors and surfaces.
Environmental precautions	Do not allow to enter drains, sewers or watercourses.
Methods for cleaning	Absorb with inert, damp, non-combustible material, then flush area with water. Dangerous waste. Collect spillage in containers, seal securely and deliver for disposal according to local regulations.

7. Handling and storage

Handling	Wear protective clothing as described in Section 8. Avoid contact with skin and eyes. Be aware of slippy floors. Contaminated rags and cloths must be put in fireproof containers for disposal.
Storage	Closed container. Original container. Avoid sunlight. Keep out of reach of children.

8. Exposure controls/personal protection

Exposure limit values

Component name	Identification	Value	Year
Zincdialkyldithiophosfate	CAS no.: 68649-42-3		
Mineral oil			

Exposure controls

Threshold limit values	adm.norm.=TLV
Other Information about threshold limit values	Adm. norm: Oil mist: 1 mg/m3, Oil vapour: 50mg/m3
Occupational exposure controls	An eye wash bottle must be available at the work site.
Respiratory protection	Respiratory protection not required.
Hand protection	For prolonged or repeated skin contact use suitable protective gloves. Nitril. Break-throughtime> 8 hours.
Eye protection	Wear approved chemical safety goggles where eye exposure is reasonably probable.
Skin protection (other than of the hands)	Wear appropriate clothing to prevent repeated or prolonged skin contact.
Other Information	When using do not eat, drink or smoke. Promptly remove any clothing that becomes wet or contaminated. Wash hands after handling. Wash contaminated clothing before reuse.

9. Physical and chemical properties

Physical state	Paste
Odour	Characteristic

Colour	Misc. colours
Solubility in water	Not soluble.
Specific gravity	**Value:** 0,91-0,95 g/cm3 **Comments:** 20 C
Melting point/melting range	**Value:** > 145 °C
Flash point	**Value:** > 200 °C

10. Stability and reactivity

Conditions to avoid	Avoid heat.
Materials to avoid	Strong oxidising substances.
Hazardous decomposition products	Fire creates: Carbon monoxide (CO). Carbon dioxide (CO2). Sulphurous gases (SOx).
Stability	Stable under the prescribed storage conditions.

11. Toxicological information

Components' toxicological data

Other information regarding health hazards

Inhalation	Vapours irritate the respiratory system, and may cause coughing and difficulties in breathing.
Skin contact	Prolonged contact may cause dryness of the skin.
Eye contact	May cause temporary eye irritation.
Ingestion	May irritate and cause stomach pain, vomiting and diarrhoea.

12. Ecological information

Components' toxicological data

Other ecological information

Ecotoxicity	,may give unwanted long-time effects i water
Mobility	The product has poor water-solubility.
Persistence and degradability	The product is not readily biodegradable.
Bioaccumulative potential	Will not bio-accumulate.

13. Disposal considerations

EWC waste code	EWC: 130205 mineral-based non-chlorinated engine, gear and lubricating oils
Product classified as hazardous waste	Yes
Packaging classified as hazardous waste	No
Specify the appropriate methods of disposal	Absorb in vermiculite or dry sand, dispose in licensed special waste.

14. Transport information

Dangerous goods ADR	**Status:** No
Dangerous goods RID	**Status:** No
Dangerous goods IMDG	**Status:** No
Dangerous goods ICAO/IATA	**Status:** No

15. Regulatory information

Composition on the label	Zincdialkyldithiophosfate: < 2,5 %, Mineral oil: 10 - 30 %
EC lable	No
R phrases	None
S phrases	S2 Keep out of the reach of children. S24 Avoid contact with skin. Safety

	data sheet available for professional user on request.
Hazard statements	EUH 210 Safety data sheet available on request.
Precautionary statements	P102 Keep out of reach of children. P262 Do not get in eyes, on skin, or on clothing.
References (laws/regulations)	MSDS is developed/ revised after 1 ATP to CLP. Chemicals (Hazard Information & Packaging) Regulations. Commission Decision 2000/532/EC as amended by Decision 2001/118/EC establishing a list of wastes and hazardous waste pursuant to Council Directive 75/442/EEC on waste and Directive 91/689/EEC on hazardous waste with amendments. Control of Pollution (Special Waste Regulations) Act 1980.

16. Other information

List of relevant R phrases (under headings 2 and 3).	R38 Irritating to skin. R41 Risk of serious damage to eyes. R51/53 Toxic to aquatic organisms, may cause long-term adverseeffects in the aquatic environment.
Supplier's notes	Developed/ revised by ApplySørco AS. Koppholen 6. Postboks 8040, 4068 Stavanger. tlf. +47 51639000 webside: www.ApplySorco.no Quality assured by SØRCO AS etter 1 ATP til CLP.
Responsible for safety data sheet	Sørco AS

SAFETY DATA SHEET

1. Identification of the substance/preparation and of the company/undertaking

Product name	**Rustilo DWX 32**
SDS #	UK-8332, NL-08332, BE-08332
Product Use	Rust preventive.
Supplier	Castrol (U.K.) Limited Wakefield House Pipers Way Swindon Wiltshire, SN3 1RE United Kingdom Tel.: +44 (0)1793 512712 Fax.: +44 (0)1793 486083
EMERGENCY TELEPHONE NUMBER	+44 (0)1793 512712

2. Composition/information on ingredients

Hydrocarbon solvent, film forming corrosion preventives and additives.

Chemical name	CAS no.	%	EINECS / ELINCS.	Classification
Low boiling point hydrogen treated naphtha (white spirit)	64742-82-1	50 - 100	265-185-4	R10 Xn; R65 R66, 67 N; R51/53
Barium long chain alkaryl sulphonate	93028-28-5	1 - 5	296-719-4	Xn; R20/22
2-(2-Butoxythoxy) ethanol; diethylene glycol-monobutyl ether	112-34-5	1 - 5	203-961-6	Xi; R36

See Section 16 for the full text of the R Phrases declared above

Occupational Exposure Limit(s), if available, are listed in Section 8

3. Hazards identification

This preparation is classified as dangerous according to Directive 1999/45/EC as amended and adapted.

Physical/chemical Hazards	Flammable.
Human health hazards	Harmful: may cause lung damage if swallowed. Repeated exposure may cause skin dryness or cracking. Vapours may cause drowsiness and dizziness. Residual film: Harmful by inhalation and if swallowed.
Environmental hazards	Toxic to aquatic organisms. May cause long-term adverse effects in the aquatic environment.
Effects and symptoms	
Eyes	May cause eye irritation.
Skin	Prolonged or repeated contact can defat the skin and lead to irritation and/or dermatitis.
Inhalation	Vapors and aerosol can produce mucous membrane, nose and throat irritation. Vapours may cause drowsiness and dizziness.
Ingestion	Ingestion may cause gastrointestinal irritation and diarrhoea. Aspiration hazard if swallowed -- harmful or fatal if liquid is aspirated into lungs.

4. First-aid measures

Eye Contact	In case of contact, immediately flush eyes with a copious amount of water for at least 15 minutes. Get medical attention if irritation occurs.
Skin contact	Immediately wash exposed skin with soap and water. Remove contaminated clothing and shoes. Wash clothing before reuse. Clean shoes thoroughly before reuse. Get medical attention if irritation develops.
Inhalation	If inhaled, remove to fresh air. Get medical attention if symptoms appear.
Ingestion	If swallowed, do NOT induce vomiting. Never give anything by mouth to an unconscious person. Aspiration hazard if swallowed- can enter lungs and cause damage. Obtain medical attention.

5. Fire-fighting measures

Extinguishing Media

Suitable	In case of fire, use water fog, foam, dry chemical or CO2 extinguisher or spray. This material is toxic to aquatic organisms. Fire water contaminated with this material must be contained and prevented from being discharged to any waterway, sewer or drain.
Not Suitable	Do not use water jet.
Hazardous decomposition products	These products are carbon oxides (CO, CO2), sulphur oxides (SO2, SO3, etc.). Some metallic oxides.
Unusual fire/explosion Hazards	This material is combustible/flammable and is sensitive to fire, heat, and static discharge.
Special fire-fighting procedures	None identified.
Protection of fire-fighters	Fire fighters should wear self-contained positive pressure breathing apparatus (SCBA) and full turnout gear. Firefighters' protective clothing will provide limited protection. DO NOT FIGHT FIRE WHEN IT REACHES MATERIAL. Withdraw from fire and let it burn. Promptly isolate the scene by removing all persons from the vicinity of the incident if there is a fire. First move people out of line-of-sight of the scene and away from windows.
Fire Hazards in Presence of Various Substances	Flammable liquid and vapour. Vapour may cause flash fire. Vapours may accumulate in low or confined areas, travel a considerable distance to a source of ignition and flash back. Runoff to sewer may create fire or explosion hazard.

6. Accidental release measures

Personal Precautions	Immediately contact emergency personnel. Eliminate all ignition sources. Keep unnecessary personnel away. Use suitable protective equipment (Section 8). Follow all fire fighting procedures (Section 5). Do not touch or walk through spilled material.
Environmental precautions and cleanup methods	If emergency personnel are unavailable, contain spilled material. For small spills add absorbent (soil may be used in the absence of other suitable materials) and use a non-sparking or explosion proof means to transfer material to a sealed, appropriate container for disposal. For large spills dike spilled material or otherwise contain material to ensure runoff does not reach a waterway. Place spilled material in an appropriate container for disposal. Minimize contact of spilled material with soils to prevent runoff to surface waterways. See Section 13 for Waste Disposal Information.
Personal Protection in Case of a Large Spill	Splash goggles. Full suit. Vapour respirator. Boots. Gloves. A self-contained breathing apparatus should be used to avoid inhalation of the product. Suggested protective clothing might not be sufficient; consult a specialist BEFORE handling this product.

7. Handling and storage

Handling	Aspiration hazard if swallowed- can enter lungs and cause damage. Do not ingest. If ingested do not induce vomiting. Avoid prolonged or repeated contact with skin. Keep container closed. Use only with adequate ventilation. Keep away from heat, sparks and flame. To avoid fire or explosion, dissipate static electricity during transfer by earthing and bonding containers and equipment before transferring material. Use explosion-proof electrical (ventilating, lighting and material handling) equipment. Avoid contact of spilled material and runoff with soil and surface waterways. Wash thoroughly after handling.
Storage	Store in a segregated and approved area. Keep container in a cool, well-ventilated area. Keep container tightly closed and sealed until ready for use. Avoid all possible sources of ignition (spark or flame).

8. Exposure controls/personal protection

Ingredient Name	Occupational Exposure Limits
Low boiling point hydrogen treated naphtha (white spirit)	**EH40-OES (United Kingdom (UK)).** TWA: 600 mg/m^3
Highly refined mineral oil	**EH40-OES (United Kingdom (UK)).** TWA: 5 mg/m^3 Form: Oil mist, mineral STEL: 10 mg/m^3 Form: Oil mist, mineral

Control Measures	Provide exhaust ventilation or other engineering controls to keep the airborne concentrations of vapours below their respective occupational exposure limits. Local exhaust ventilation is preferred because it prevents contaminant dispersion into the work area by controlling it at its source.
Hygiene measures	Wash hands after handling compounds and before eating, smoking, using lavatory, and at the end of day.
Personal protective equipment	
Respiratory system	Use with adequate ventilation. In case of insufficient ventilation, wear suitable respiratory equipment.
Skin and body	Avoid contact with skin. Wear clothing and footwear that cannot be penetrated by chemicals or oil.
Hands	Wear gloves that cannot be penetrated by chemicals or oil.
Eyes	Safety glasses with side shields.

9. Physical and chemical properties

Autoignition temperature	>200 °C
Flash point	40 °C (CLOSED CUP)
Explosion Limits	LOWER: 0.6 % UPPER: 8 %
Colour	Brown.
Odour	Solvent.
Odour threshold	Not available.
Physical state	Liquid.
Boiling point / range	150 °C
Density	<1 g/cm^3
Vapour pressure	2.625 mmHg
Solubility	Insoluble in cold water, hot water.
Viscosity	kinematic at 40°C: <7 cSt

10. Stability and reactivity

Conditions to Avoid	Keep away from sources of ignition.
Incompatibility with Various Substances	Reactive with oxidizing agents.
Hazardous Polymerization	Will not occur.

11. Toxicological information

Chronic toxicity

Carcinogenic effects No component of this product at levels greater than 0.1% is identified as a carcinogen by ACGIH, the International Agency for Research on Cancer (IARC) or the European Commission (EC).

12. Ecological information

Persistence/degradability	Inherently biodegradable
Mobility	Volatile. Liquid. Insoluble in water.
Bioaccumulative potential	This product may bioaccumulate through food chains in the environment.
Environmental hazards	Toxic to aquatic organisms. May cause long-term adverse effects in the aquatic environment.

13. Disposal considerations

Disposal Consideration / Waste information	Avoid contact of spilled material and runoff with soil and surface waterways. Consult an environmental professional to determine if local, regional or national regulations would classify spilled or contaminated materials as hazardous waste. Use only approved transporters, recyclers, treatment, storage or disposal facilities.
Hazardous Waste	This product is listed as Hazardous by the EU Directive on hazardous waste. Dispose of according to all national and local applicable regulations.

14. Transport information

International transport regulations

Regulatory Information	UN number	Proper shipping name	Class	Packing group	Label	Additional Information
ADR/RID Classification	UN1300	Turpentine substitute mixture	3	III		**Hazard identification number** **30** **CEFIC Tremcard Number:** **30G35** **Hazchem Code** **3Y**

ADNR Classification	UN1300	Turpentine substitute mixture	3	III		-
IMDG Classification	UN1300	Turpentine substitute mixture	3	III		**Emergency Schedules (EmS)** **3-07** **Marine pollutant** **IMDG Class: Marine Pollutant. (Pollutant.)**
IATA Classification	UN1300	Turpentine substitute mixture	3	III		-

15. Regulatory information

Label Requirements

Hazard symbol(s)

Indication of Danger Harmful Dangerous for the environment.

Risk Phrases
R10- Flammable.
R65- Harmful: may cause lung damage if swallowed.
R66- Repeated exposure may cause skin dryness or cracking.
R67- Vapours may cause drowsiness and dizziness.
R51/53- Toxic to aquatic organisms, may cause long-term adverse effects in the aquatic environment.

Safety Phrases
S23- Do not breathe vapour or spray.
S24/25- Avoid contact with skin and eyes.
S43- In case of fire, use CO2/dry powder/foam - Never use water..
S51- Use only in well-ventilated areas.
S61- Avoid release to the environment. Refer to special instructions/Safety data sheets.
S62- If swallowed, do not induce vomiting: seek medical advice immediately and show this container or label.

Contains Low boiling point hydrogen treated naphtha (white spirit)

EU Regulations Classification and labelling have been performed according to EU directives 1999/45/EC and 67/548/EEC as amended and adapted.

Other Regulations

Inventories

AUSTRALIAN INVENTORY (AICS): Not determined.

CANADA INVENTORY (DSL): Not determined.

CHINA INVENTORY (IECS): Not determined.

EC INVENTORY (EINECS): In compliance.

JAPAN INVENTORY (ENCS): Not determined.

KOREA INVENTORY (ECL): Not determined.

PHILIPPINE INVENTORY (PICCS): Not determined.

US INVENTORY (TSCA): Not determined.

16. Other information

Full text of R-phrases appearing in section 2	R10- Flammable. R20/22- Harmful by inhalation and if swallowed. R65- Harmful: may cause lung damage if swallowed. R36- Irritating to eyes. R66- Repeated exposure may cause skin dryness or cracking. R67- Vapours may cause drowsiness and dizziness. R51/53- Toxic to aquatic organisms, may cause long-term adverse effects in the aquatic environment.

HISTORY

Date of issue	21/02/2003.
Date of previous issue	30/07/2002.
Prepared by	Product Stewardship

Notice to Reader

The data and advice given apply when the product is sold for the stated application or applications. The product is not sold as suitable for any other application. Use of the product for applications other than as stated in this sheet may give rise to risks not mentioned in this sheet. You should not use the product other than for the stated application or applications without seeking advice from us.

If you have purchased the product for supply to a third party for use at work, it is your duty to take all necessary steps to secure that any person handling or using the product is provided with the information in this sheet.

If you are an employer, it is your duty to tell your employees and others who may be affected of any hazards described in this sheet and of any precautions which should be taken.

Further copies of this Safety Data Sheet may be obtained from Castrol.

Page intentionally left blank for 2-sided printing purposes

Page intentionally left blank for 2-sided printing purposes

SAFETY DATA SHEET

according to 1907/2006/EC, Article 31

Premtape

Revision 1

Revision date 2013-10-14

SECTION 1: Identification of the substance/mixture and of the company/undertaking

1.1. Product identifier

Product name	Premtape

1.2. Relevant identified uses of the substance or mixture and uses advised against

Product Use	[SU3] Industrial uses: Uses of substances as such or in preparations at industrial sites; [SU19] Building and construction work; [PC1] Adhesives, sealants; ----- [SU21] Consumer uses: Private households (= general public = consumers); [PC1] Adhesives, sealants; ----- [SU22] Professional uses: Public domain (administration, education, entertainment, services, craftsmen); [SU19] Building and construction work; [PC1] Adhesives, sealants;

1.3. Details of the supplier of the safety data sheet

Company	Premier Coatings Ltd
Address	Headcorn Road, Smarden, Ashford, Kent TN27 8PJ
Web	www.premiercoatings.com
Telephone	+ 44 (0) 1233 770 663
Fax	+44 (0) 1233 770 633
Email	enquires@premiercoatings.com
Email address of the competent person	help@premiercoatings.com

1.4. Emergency telephone number

Emergency telephone number	+ 44 (0) 1233 770 663 9.00 am - 5.00 pm Mon - Fri

SECTION 2: Hazards identification

2.1. Classification of the substance or mixture

Main hazards	No Significant Hazard

2.2. Label elements

	Not required.

2.3. Other hazards

Other hazards	Not determined.

SECTION 3: Composition/information on ingredients

3.2. Mixtures

	This product does not contain any substances classified as hazardous to health.

SECTION 4: First aid measures

Premtape

Revision 1
Revision date 2013-10-14

4.1. Description of first aid measures

Inhalation	If you feel unwell, seek medical advice (show the label where possible).
Eye contact	Avoid contact with eyes.
Skin contact	Avoid contact with skin. Wash with soap and water.
Ingestion	If you feel unwell, seek medical advice (show the label where possible).

4.2. Most important symptoms and effects, both acute and delayed

Inhalation	Solid. Potential Suffocation.
Eye contact	May cause irritation to eyes.
Skin contact	May cause irritation to skin.
Ingestion	If you feel unwell, seek medical advice (show the label where possible).

4.3. Indication of any immediate medical attention and special treatment needed

Inhalation	Seek medical attention.
Eye contact	Rinse immediately with plenty of water.
Skin contact	Wash off immediately with plenty of soap and water.
Ingestion	If swallowed, do not induce vomiting: seek medical advice immediately and show this container or label.

SECTION 5: Firefighting measures

5.1. Extinguishing media

Carbon dioxide (CO_2). Dry chemical. Foam.

Do NOT use water jet.

5.2. Special hazards arising from the substance or mixture

Burning produces obnoxious and irritating fumes.

5.3. Advice for firefighters

Wear suitable respiratory equipment when necessary.

SECTION 6: Accidental release measures

6.1. Personal precautions, protective equipment and emergency procedures

Wear suitable gloves.

6.2. Environmental precautions

Not normally required.

6.3. Methods and material for containment and cleaning up

Collect spillage.

6.4. Reference to other sections

See section 8, 13 for further information.

SECTION 7: Handling and storage

7.1. Precautions for safe handling

Wear suitable gloves.
Adopt best Manual Handling considerations when handling, carrying and dispensing.

7.2. Conditions for safe storage, including any incompatibilities

Avoid sparks, flames, heat and sources of ignition.

7.3. Specific end use(s)

See section 1.2 for further information.

SECTION 8: Exposure controls/personal protection

8.1. Control parameters

Not normally required.

Premtape

Revision 1
Revision date 2013-10-14

8.2. Exposure controls

	
Eye / face protection	Not normally required.
Skin protection - Handprotection	Wear suitable gloves.
Respiratory protection	Not normally required.

SECTION 9: Physical and chemical properties

9.1. Information on basic physical and chemical properties

State	Solid
Colour	Brown
Odour	Characteristic
pH	Not determined
Melting point	Not determined
Freezing Point	Not determined
Boiling point	Not determined
Flash point	Not relevant
Evaporation rate	Not relevant
Flammability limits	No data available
Vapour Flammability	No data available
Vapour pressure	Not relevant
Vapour density	Not relevant
Relative density	Not relevant
Fat Solubility	Not determined
Partition coefficient	Not determined
Autoignition temperature	Not determined
Viscosity	Not relevant
Explosive	Not relevant
Oxidising	Not relevant
Solubility	Insoluble in water

9.2. Other information

Conductivity	Not determined
Surface tension	Not relevant
Gas group	Not relevant
Benzene Content	Not determined
Lead content	Not determined
VOC (Volatile organic compounds)	Not determined

SECTION 10: Stability and reactivity

10.1. Reactivity

Stable under normal conditions.

10.2. Chemical stability

Stable under normal conditions.

10.3. Possibility of hazardous reactions

No Significant Hazard.

10.4. Conditions to avoid

Premtape

Revision 1
Revision date 2013-10-14

10.4. Conditions to avoid

Heat, sparks and open flames.

10.5. Incompatible materials

Keep away from food, drink and animal feedingstuffs.

10.6. Hazardous decomposition products

Will not decompose if stored and used as recommended.

SECTION 11: Toxicological information

11.1. Information on toxicological effects

No data is available on this product.

11.1.4. Toxicological Information

No data available

SECTION 12: Ecological information

12.1. Toxicity

No data available

12.2. Persistence and degradability

No data is available on this product.

12.3. Bioaccumulative potential

No data is available on this product.

12.4. Mobility in soil

No data is available on this product.

12.5. Results of PBT and vPvB assessment

No data is available on this product.

12.6. Other adverse effects

No data is available on this product.

SECTION 13: Disposal considerations

13.1. Waste treatment methods

Do not empty into drains; dispose of this material and its container in a safe way.

General information

EWC.
08 WASTES FROM THE MANUFACTURE, FORMULATION, SUPPLY AND USE (MFSU) OF COATINGS (PAINTS, VARNISHES AND VITREOUS ENAMELS), ADHESIVES, SEALANTS AND PRINTING INKS.
08 04 10 waste adhesives and sealants other than those mentioned in 08 04 09.

Disposal methods

Contact a licensed waste disposal company.

Disposal of packaging

Contact a licensed waste disposal company.

SECTION 14: Transport information

ADR/RID

The product is not classified as dangerous for carriage.

IMDG

The product is not classified as dangerous for carriage.

IATA

The product is not classified as dangerous for carriage.

Premtape

Revision 1
Revision date 2013-10-14

SECTION 15: Regulatory information

15.1. Safety, health and environmental regulations/legislation specific for the substance or mixture

	COMMISSION REGULATION (EU) No 453/2010 of 20 May 2010 amending Regulation (EC) No 1907/2006 of the European Parliament and of the Council on the Registration, Evaluation, Authorisation and Restriction of Chemicals (REACH), establishing a European Chemicals Agency, amending Directive 1999/45/EC and repealing Council Regulation (EEC) No 793/93 and Commission Regulation (EC) No 1488/94 as well as Council Directive 76/769/EEC and Commission Directives 91/155/EEC, 93/67/EEC, 93/105/EC and 2000/21/EC. REGULATION (EC) No 1907/2006 OF THE EUROPEAN PARLIAMENT AND OF THE COUNCIL of 18 December 2006 concerning the Registration, Evaluation, Authorisation and Restriction of Chemicals (REACH), establishing a European Chemicals Agency, amending Directive 1999/45/EC and repealing Council Regulation (EEC) No 793/93 and Commission Regulation (EC) No 1488/94 as well as Council Directive 76/769/EEC and Commission Directives 91/155/EEC, 93/67/EEC, 93/105/EC and 2000/21/EC.

15.2. Chemical safety assessment

	Not relevant.

Labelling

Risk phrases	No Significant Hazard.

SECTION 16: Other information

Other information

	The information supplied in this Safety Data Sheet is designed only as guidance for the safe use, storage and handling of the product. This information is correct to the best of our knowledge and belief at the date of publication however no guarantee is made to its accuracy. This information relates only to the specific material designated and may not be valid for such material used in combination with any other materials or in any other process.
Revision	This document differs from the previous version in the following areas:. 11 - 11.1. Information on toxicological effects.

NATIONAL OILWELL VARCO

TEST SPECIFICATION
SLX

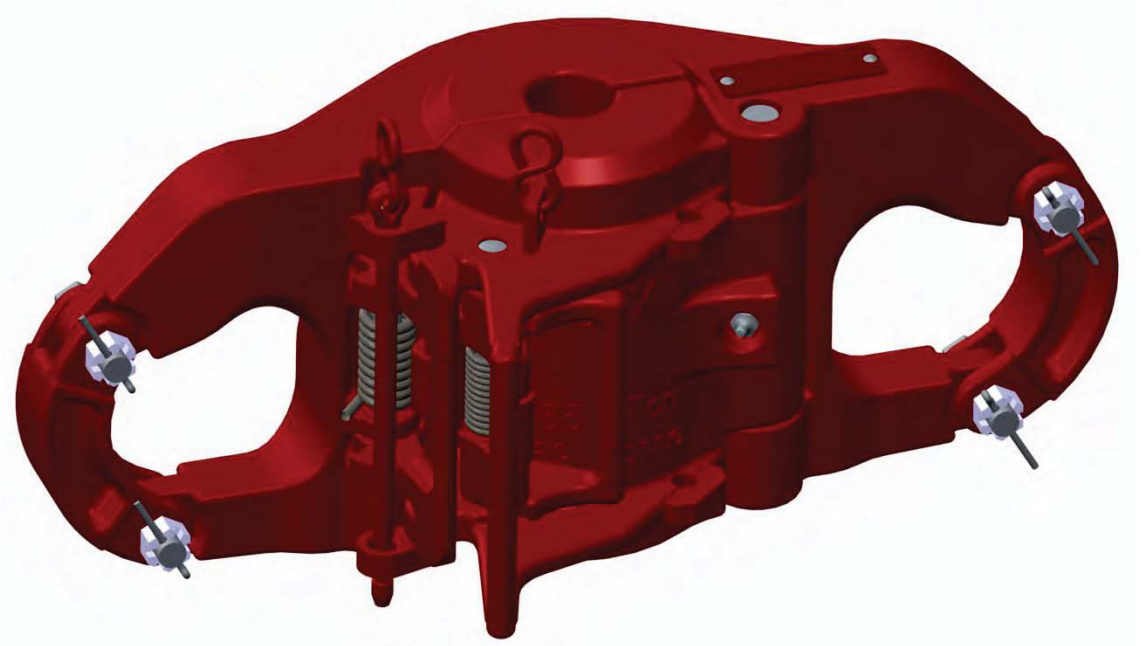

Part Description:	
Part Number:	
Serial No.:	
Shop/Work Order:	
Date:	

3rd Party (if applicable) (approval / review / witnessed items)	(name)	(signature)
Final Inspection	(name)	(signature)
NOV Picker (complete delivery warehouse)	(name)	(signature)

1 FINAL INSPECTIONS AND DATABOOK INFORMATION

Reference serial number:_____

Part numbering and traceability information

Part	Part number	Heat-code/ Serial number	(*2) 1e 907	(*3) 2e 907	(*4) 910	Foundry/ Vendor
Body						
Door						
Latch						
H-pin						
L-pin						

(*2)Heatno's checked by: _____Name, _____Signature

(*3)Heatno's checked by: _____Name, _____Signature

(*4)Heatno's checked by: _____Name, _____Signature

2 General inspection

		Initials required: Operator	Initials required: Cross Checker
2.1	Check there are no sharp corners or edges on parts.		
2.2	Check there are no welding spatters.		
2.3	Check that the assembly has been load tested		
2.4	Check that the assembly has been MPI tested		
2.5	Check paint layer thickness according to specification. Measure and note down 3 positions randomly taken from the painted surfaces: Measurement 1; _____ Measurement 2; _____ Measurement 3:_____		
2.6	Check all blank surfaces have preservation applied (picker).		
2.7	Check painted surfaces for no chipping and a gloss finish (picker).		
2.8	Check all greasing points are greased		
2.9	Check all sliding surfaces have grease applied prior or after assembly.		
2.10	Check secondary retention rules have been applied as mentioned on the assembly drawing and secondary retention guide.		

		Initials required	
		Operator	Cross Checker
3	**Before load test**		
3.1	Check marking on presence, legibility and verify with shop order;		
3.1.1	Part number: _____		
3.1.2	Serial number: _____		
3.1.3	Bore code: _____		
3.1.4	Rating: _____		
3.2	Check that the lower Door hinge makes contact with the lower body hinge. (Use .006” feeler gage)		
3.3	Check that the ‘Door seat’ makes contact with the ‘Body seat’. (Use .006” feeler gage)		
3.4	Check if latch is minimum 1/8” free from Door lugs. (Top and bottom) (See fig 2)		
3.5	Check if latch lock hook is free from the lock surface on latch. (See fig 4)(Elevator wedged, use .006” feeler gage)		
3.6	Latch lock can rotate freely.		
3.7	Latch lock is within the door flanges contour.		
3.8	Check that latch doesn’t move outward when wedged.		
3.9	Wedge elevator once at top and once at bottom. Check for latch/lug contact in both cases and check that these faces are parallel. (See fig 3 and 6)		

3.10	Pull on lock handle to bring latch against stop check distance of 1/8" (min) between latch (in farthest open position) and lug. (See fig 5) Note down the measured gap:_____		
3.11	Check if distance between Body and Door is within 1/32" – 3/64" on latch side. (see fig 1dimension 'P') Note down the measured gap: _____		
3.12	Check latch doesn't stick out more than 1/16" above or under the latch/lug area. (see fig 2) Note down the measured dimension:_____		
3.13	Check if the latch lock prevents the latch from being opened when the latch is pried from behind in closed position (see fig 6)		
3.14	Check visually that only the lock roller makes contact with the latch during opening and that de roller rotates. (see fig 5)		
3.15	Check if lock engage over a distance of minimum 3/16" (see fig 4) Note down the measured dimension:_____		
3.16	Check lock at least lies against one off the stop pads.		
3.17	Check if correct spring are fitted and latch en latch lock works without any hesitation.		
3.18	Check if link blocks can rotate freely to a minimum horizontal position.		

3.19 Pipe opening;

When the bore is 2 7/8" or smaller the pipe opening should be 1" more than the actual bore.
Note down the measurements; _____
When the bore is between 2.7/8" and 5.1/2" the pipe opening should be 1.1/2." more than the actual bore.

Note down the measurements: _____
When the bore is equal or bigger then 5.1/2" the pipe opening should be 2" more than the actual bore.

Note down the measurements: _____

3.20 Open and close the elevator 5 times slowly and 5 times quickly check that the elevator works without hesitation or hampering.

4 After load test

		Initials required; Operator	Quality Inspector
4.1	Check if elevator is load tested and MPI'd.		
4.2	Check there are no sharp corners, edges or weld spatter that can cause injury.		
4.3	Check there's no corrosion on pins, springs and machined areas.		
4.4	Hinge pin lock bar is engaged both sides for at least 3/16".		
4.5	Check if safety chain is properly attached to the verification pin and elevator door and if connecting links are welded. (2x)		
4.6	Check if link blocks, bolts, nuts (on front side of elevator) and cotter pins are present.		
4.7	The ends of the latch springs have been trimmed. Note: Under tension, spring ends must stay fully engaged.		
4.8	Check if hinge-pin hole on bottom side is retained and latch and latch lock pin on the upper side are retained.		
4.9	Check for presence of tack weld on roller pin and if roller rotates.		
4.10	Latch lock hook is free from the latch.		
4.11	Check that grease nipple on door hinge boss is present.		
4.12	Check if grease on latch/lug contact area, latch/latch-lock sliding area and one bore is present.		
4.13	Open and close the elevator 5 times slowly and 5 times quickly check that the elevator works without hesitation or hampering.		

4.14 Close door, with door sitting on bottom hinge lug (and close door tilted up against top hinge lug) Verify, in both cases that the door closes and the latch locks properly.

4.15 Check when door is closed that the position of the safety latch lock pin ensures that the elevator is properly latched and locked.

4.16 Check that a wire line can't trap the chain which can cause the safety latch lock pin to be pulled out.

4.17 Check if al stamping has been applied according to drawing and router.

4.18 Wedge elevator according to Wedge and measurement instruction SLX elevator.

Measure the top and bottom bore and note down the dimensions as shown on picture

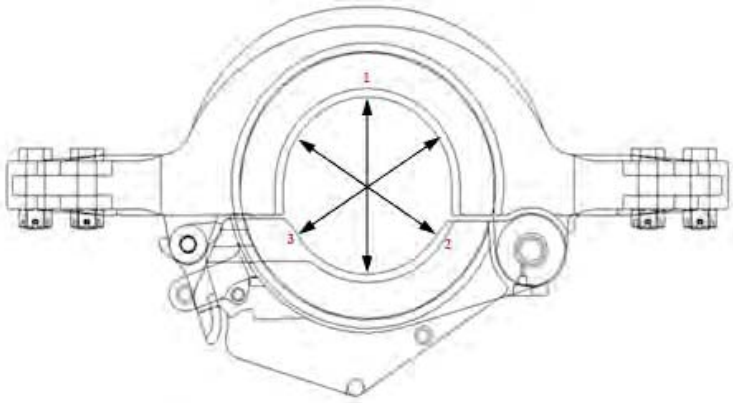

Top bore 1 _____ Bottom bore 1 _____

Top bore 2 _____ Bottom bore 2 _____

Top bore 3 _____ Bottom bore 3 _____

4.19 Check dimensions ears with gauge

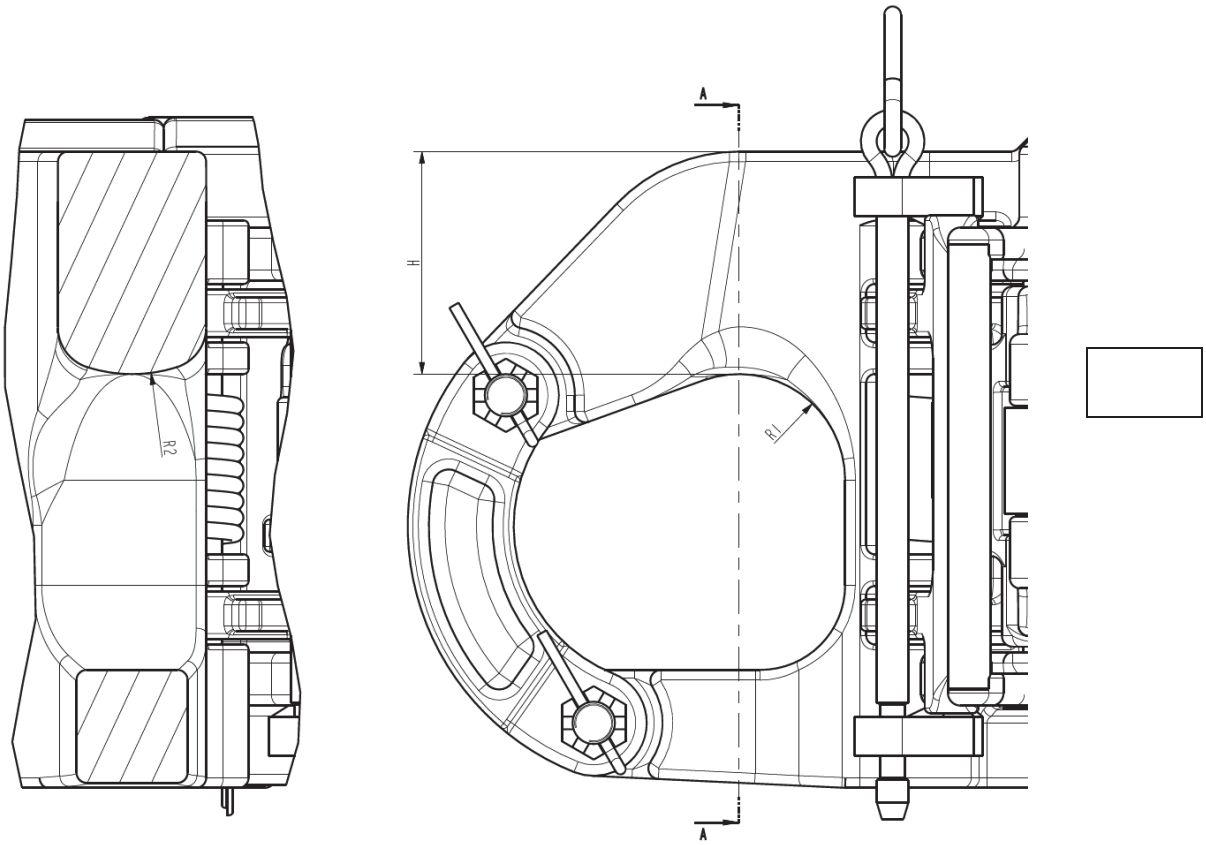

5 REMARKS

_____

_____

_____

_____

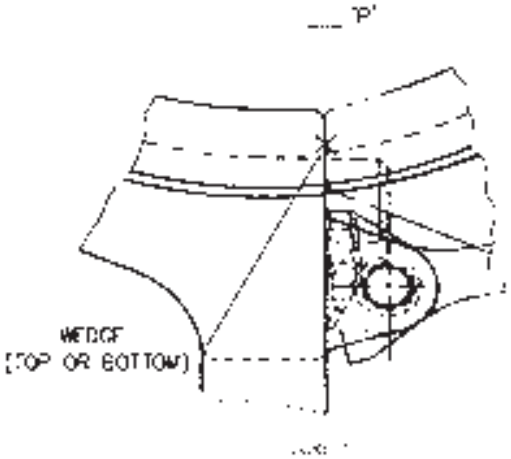

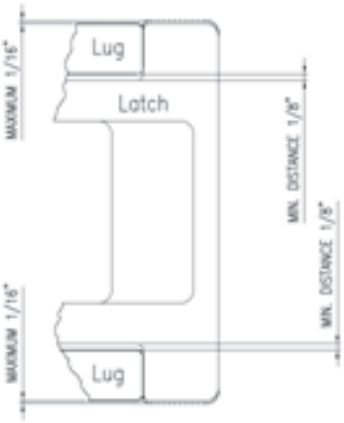

FIGURE 2

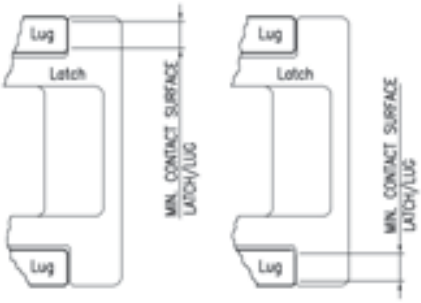

ELEVATOR WEDGE AT TOP ELEVATOR WEDGE AT BOTTOM

FIGURE 3

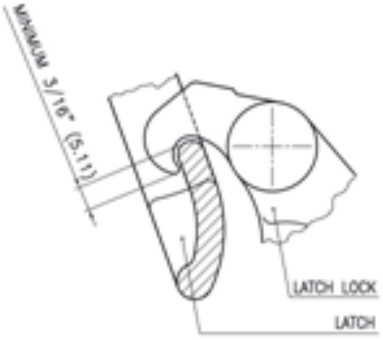

FIGURE 4

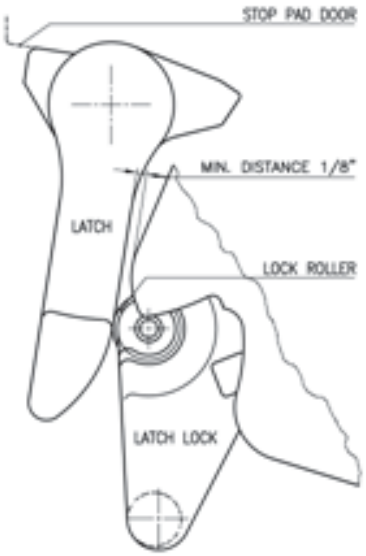

FIGURE 5

FIGURE 6

Varco BJ B.V. Nijverheidsweg 45 4879 AP Etten-Leur The Netherlands Tel: +31-76-5083000 Fax: +31-76-5046000	Revision: **i**	Document No.: **TSEL-0018** **ECR 00014738**	Description: **SLX test specification**	Sheet: **10 of 10**

NATIONAL OILWELL VARCO

TEST SPECIFICATION
TA - Series

Part Description:	
Part Number:	
Serial No.:	
Shop/Work Order:	
Date:	

3rd Party (if applicable) (approval / review / witnessed items)	(name)	(signature)
Final Inspection	(name)	(signature)
NOV Picker (complete delivery warehouse)	(name)	(signature)

1 FINAL INSPECTIONS AND DATABOOK INFORMATION

Reference serial number:_____

Part numbering and traceability information

Part	Part number	Heat-code/ Serial number	(*2) 1e 907	(*3) 2e 907	(*4) 910	Foundry/ Vendor
Body						
Door						
Latch						
H-pin						
L-pin						

(*2)Heatno's checked by: _____ Name, _____ Signature

(*3)Heatno's checked by:_____ Name, _____ Signature

(*4)Heatno's checked by:_____ Name, _____ Signature

2 General inspection

		Initials required: Operator	Initials required: Cross check
2.1	Check there are no sharp corners or edges on parts.		
2.2	Check there are no welding spatters.		
2.3	Check that the assembly has been load tested		
2.4	Check that the assembly has been MPI tested		
2.5	Check paint layer thickness according to specification. Measure and note down 3 positions randomly taken from the painted surfaces: Measurement 1; _____ Measurement 2; _____ Measurement 3:_____		
2.6	Check all blank surfaces have preservation applied (picker).		
2.7	Check painted surfaces for no chipping and a gloss finish (picker).		
2.8	Check all greasing points are greased		
2.9	Check all sliding surfaces have grease applied prior or after assembly.		
2.10	Check secondary retention rules have been applied as mentioned on the assembly drawing and secondary retention guide.		

Initials required;

	Operator	Quality Inspector

3 Before load test (For all Elevators)

3.1 Check marking on presence, legibility and verify with shop order;

3.1.1 Part number: _____

3.1.2 Serial number: _____

3.1.3 Bore code: _____

3.1.4 Rating: _____

3.2 Check if the latch is minimum 3/16” free from the door (fig 1).

Note down the measured dimension: _____

3.3 Check that the clearance between latch and door lug is 1/8” minimum (top and bottom)

3.4 Check if the lock is between 1/16” - 5/32” clear from the door lock surface (fig 1).

Note down the measured dimension: _____

3.5 Check if latch lock can rotate freely and if it is within the door guide’s (top and bottom)

3.6 Check if distance between the body and door is within 1/32”- 1/16”

Note down the measured dimension:_____ _____

3.7 Check that the distance between latch and door lug is minimum 3/16” (elevator closed and latch in maximum opened position) Note down

3.8 the measured dimension: _____

3.9 Check lock engage minimum 3/8” x 3/8” behind the lock surface from the door.

(For 32754, 39342, 200000 it should be 7/16” x 7/16”) (See fig 1 and 2)

3.10 Check if the clearance between the bottom side from the latch lock and the door guide is minimum 1/16” when the door is wedged up.

3.11 When the latch is pried from behind, the latch lock must prevent the latch from being opened.

3.12 Check that correct latch and latch lock spring are fitted and if the latch/latch lock can rotate freely and opens and closes very smoothly

3.13 Pipe opening:

If the bore is 2 7/8” or smaller the pipe opening should be at least 1 3/8” more than the actual bore.

Note down the measurements; _____

If the bore is between 2.7/8” and 5.1/2” the pipe opening should be 1.1/2.” more than the actual bore.

Note down the measurements: _____

If the bore is equal or bigger then 5.1/2” the pipe opening should be 2” more than the actual bore.

Note down the measurements: _____

At Part no 32383 the pipe opening only has to be 1” bigger than the actual bore.

Note down the measurements: _____

3.14 Check for reducing chamber in body under hinge and latch pin.

3.15 Check if link blocks can rotate freely to a minimum horizontal position.

4 After load test (For all Elevators)

		Initials required: Operator	Cross check
4.1	Check if elevator is load tested and MPI'd.		
4.2	Check there are no sharp corners, edges or weld spatter that can cause injury.		
4.3	Check there's no corrosion on pins, springs and machined areas.		
4.4	Check if latch and hinge pin are retained on the bottom side.		
4.5	Check when latch is fully open that both springs ends are correctly engaged and that the springs don't stick out.		
4.6	Check if hinge pin lock bar is engaged both sides for at least 3/16" (fig 3)		
4.7	Check if latch and latch lock pin on the top side are retained.		
4.8	Check if link blocks, bolts, nuts (on front side of elevator) and cotter pins are present.		
4.9	Check that grease nipples on door hinge boss are present and greased.		
4.10	Check if grease on latch/lug contact area, latch/latch-lock sliding area and one bore is present.		
4.11	Check if al stamping has been applied according to drawing and router.		
4.12	Check if info and read manual nameplate is present.		
4.13	Open and close the elevator 5 times slowly and 5 times quickly check that the elevator works without hesitation or hampering.		

4.14 Wedge elevator according to Wedge and measurement instruction TMA - TA elevator.

Measure the top and bottom bore and note down the dimensions as shown on picture

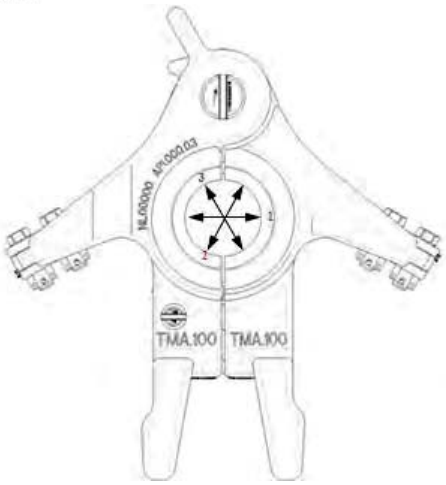

Top bore 1 _____ Bottom bore 1 _____

Top bore 2 _____ Bottom bore 2 _____

Top bore 3 _____ Bottom bore 3 _____

4.15 Check dimensions ears with gauge

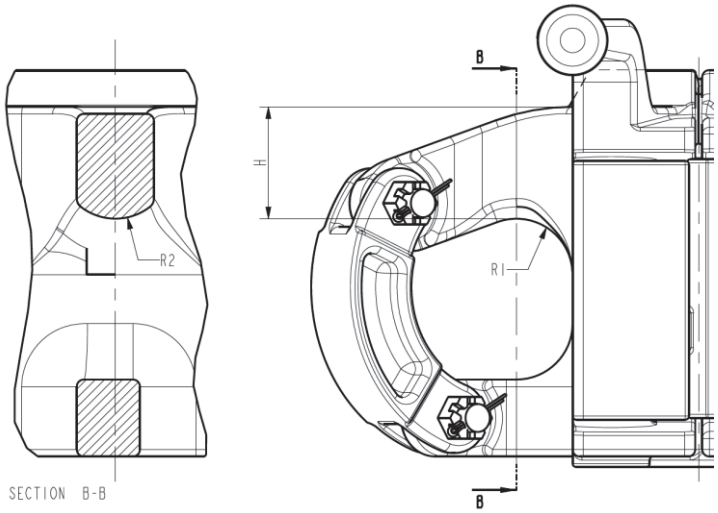

6 REMARKS

_____
_____
_____
_____

figuur1

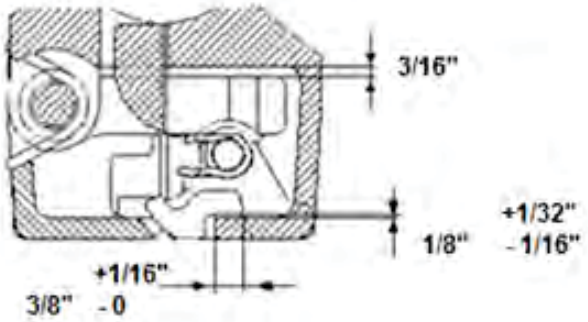

figuur 2

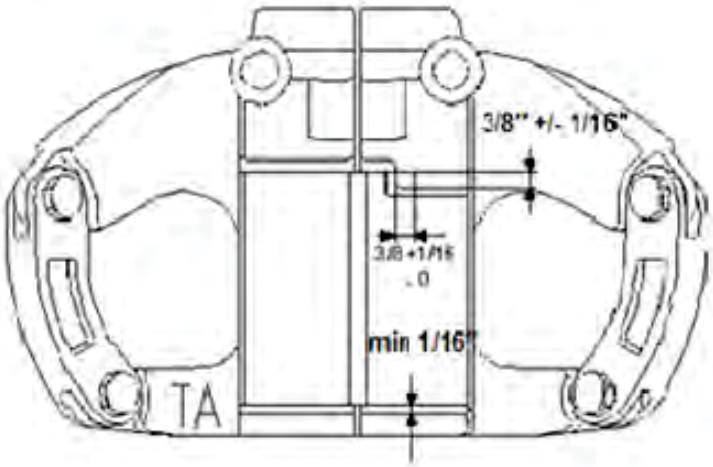

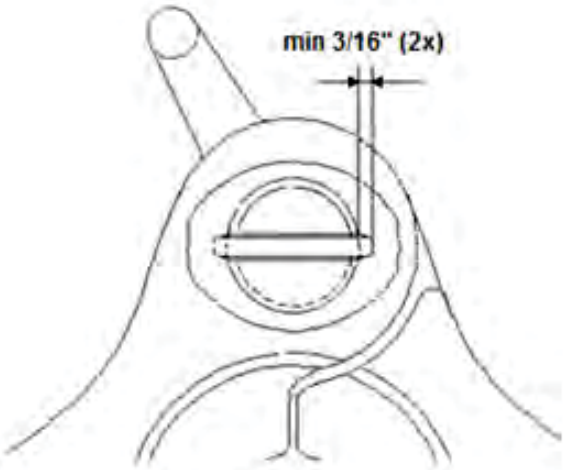

figuur 3

Varco BJ B.V. Nijverheidsweg 45 4879 AP Etten-Leur The Netherlands Tel: +31-76-5083000 Fax: +31-76-5046000	Revision: **H**	Document No.: **TSEL-0022** **ECR 00014738**	Description: **TA – Series test specification**	Sheet: **9 of 9**

Page intentionally left blank for 2-sided printing purposes

NATIONAL OILWELL VARCO

TEST SPECIFICATION
SLX

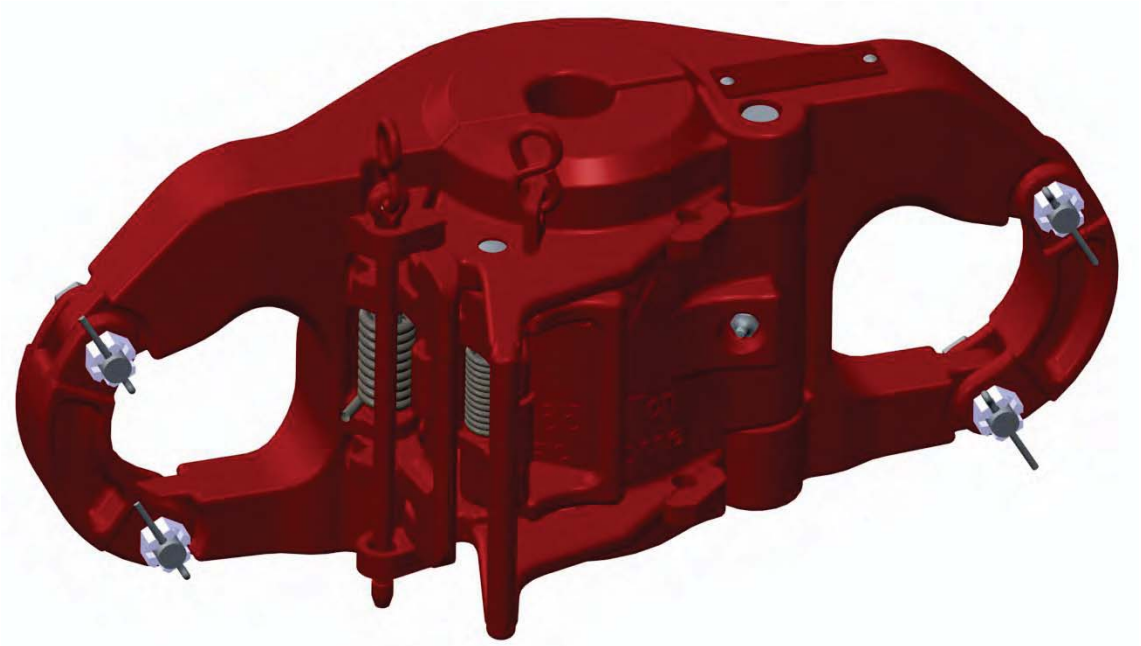

Part Description:	
Part Number:	
Serial No.:	
Shop/Work Order:	
Date:	

3rd Party (if applicable) (approval / review / witnessed items)	(name)	(signature)
Final Inspection	(name)	(signature)
NOV Picker (complete delivery warehouse)	(name)	(signature)

1 FINAL INSPECTIONS AND DATABOOK INFORMATION

Reference serial number:_____

Part numbering and traceability information

Part	Part number	Heat-code/ Serial number	(*2) 1e 907	(*3) 2e 907	(*4) 910	Foundry/ Vendor
Body						
Door						
Latch						
H-pin						
L-pin						

(*2)Heatno's checked by: _____Name, _____Signature

(*3)Heatno's checked by: _____Name, _____Signature

(*4)Heatno's checked by: _____Name, _____Signature

2 General inspection

		Initials required: Operator	Initials required: Cross Checker
2.1	Check there are no sharp corners or edges on parts.		
2.2	Check there are no welding spatters.		
2.3	Check that the assembly has been load tested		
2.4	Check that the assembly has been MPI tested		
2.5	Check paint layer thickness according to specification. Measure and note down 3 positions randomly taken from the painted surfaces: Measurement 1; _____ Measurement 2; _____ Measurement 3:_____		
2.6	Check all blank surfaces have preservation applied (picker).		
2.7	Check painted surfaces for no chipping and a gloss finish (picker).		
2.8	Check all greasing points are greased		
2.9	Check all sliding surfaces have grease applied prior or after assembly.		
2.10	Check secondary retention rules have been applied as mentioned on the assembly drawing and secondary retention guide.		

		Initials required	
		Operator	Cross Checker
3	**Before load test**		
3.1	Check marking on presence, legibility and verify with shop order;		
3.1.1	Part number: _____		
3.1.2	Serial number: _____		
3.1.3	Bore code: _____		
3.1.4	Rating: _____		
3.2	Check that the lower Door hinge makes contact with the lower body hinge. (Use .006” feeler gage)		
3.3	Check that the ‘Door seat’ makes contact with the ‘Body seat’. (Use .006” feeler gage)		
3.4	Check if latch is minimum 1/8” free from Door lugs. (Top and bottom) (See fig 2)		
3.5	Check if latch lock hook is free from the lock surface on latch. (See fig 4)(Elevator wedged, use .006” feeler gage)		
3.6	Latch lock can rotate freely.		
3.7	Latch lock is within the door flanges contour.		
3.8	Check that latch doesn’t move outward when wedged.		
3.9	Wedge elevator once at top and once at bottom. Check for latch/lug contact in both cases and check that these faces are parallel. (See fig 3 and 6)		

3.10 Pull on lock handle to bring latch against stop check distance of 1/8" (min) between latch (in farthest open position) and lug. (See fig 5)

Note down the measured gap:_____

3.11 Check if distance between Body and Door is within 1/32" – 3/64" on latch side. (see fig 1dimension 'P')

Note down the measured gap: _____

3.12 Check latch doesn't stick out more than 1/16" above or under the latch/lug area. (see fig 2)

Note down the measured dimension:_____

3.13 Check if the latch lock prevents the latch from being opened when the latch is pried from behind in closed position (see fig 6)

3.14 Check visually that only the lock roller makes contact with the latch during opening and that de roller rotates. (see fig 5)

3.15 Check if lock engage over a distance of minimum 3/16" (see fig 4)

Note down the measured dimension:_____

3.16 Check lock at least lies against one off the stop pads.

3.17 Check if correct spring are fitted and latch en latch lock works without any hesitation.

3.18 Check if link blocks can rotate freely to a minimum horizontal position.

3.19 Pipe opening;

When the bore is 2 7/8" or smaller the pipe opening should be 1" more than the actual bore.
Note down the measurements; _____
When the bore is between 2.7/8" and 5.1/2" the pipe opening should be 1.1/2." more than the actual bore.

Note down the measurements: _____
When the bore is equal or bigger then 5.1/2" the pipe opening should be 2" more than the actual bore.

Note down the measurements: _____

3.20 Open and close the elevator 5 times slowly and 5 times quickly check that the elevator works without hesitation or hampering.

4 After load test

		Initials required; Operator	Quality Inspector
4.1	Check if elevator is load tested and MPI'd.		
4.2	Check there are no sharp corners, edges or weld spatter that can cause injury.		
4.3	Check there's no corrosion on pins, springs and machined areas.		
4.4	Hinge pin lock bar is engaged both sides for at least 3/16".		
4.5	Check if safety chain is properly attached to the verification pin and elevator door and if connecting links are welded. (2x)		
4.6	Check if link blocks, bolts, nuts (on front side of elevator) and cotter pins are present.		
4.7	The ends of the latch springs have been trimmed. Note: Under tension, spring ends must stay fully engaged.		
4.8	Check if hinge-pin hole on bottom side is retained and latch and latch lock pin on the upper side are retained.		
4.9	Check for presence of tack weld on roller pin and if roller rotates.		
4.10	Latch lock hook is free from the latch.		
4.11	Check that grease nipple on door hinge boss is present.		
4.12	Check if grease on latch/lug contact area, latch/latch-lock sliding area and one bore is present.		
4.13	Open and close the elevator 5 times slowly and 5 times quickly check that the elevator works without hesitation or hampering.		

4.14 Close door, with door sitting on bottom hinge lug (and close door tilted up against top hinge lug) Verify, in both cases that the door closes and the latch locks properly.

4.15 Check when door is closed that the position of the safety latch lock pin ensures that the elevator is properly latched and locked.

4.16 Check that a wire line can't trap the chain which can cause the safety latch lock pin to be pulled out.

4.17 Check if al stamping has been applied according to drawing and router.

4.18 Wedge elevator according to Wedge and measurement instruction SLX elevator.

Measure the top and bottom bore and note down the dimensions as shown on picture

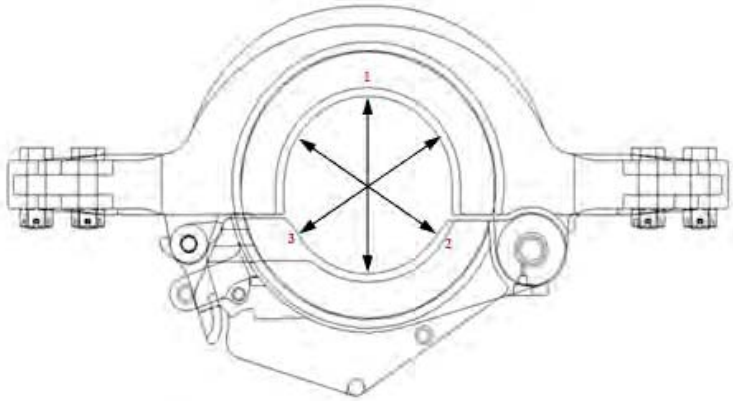

Top bore 1 _____ Bottom bore 1 _____

Top bore 2 _____ Bottom bore 2 _____

Top bore 3 _____ Bottom bore 3 _____

4.19 Check dimensions ears with gauge

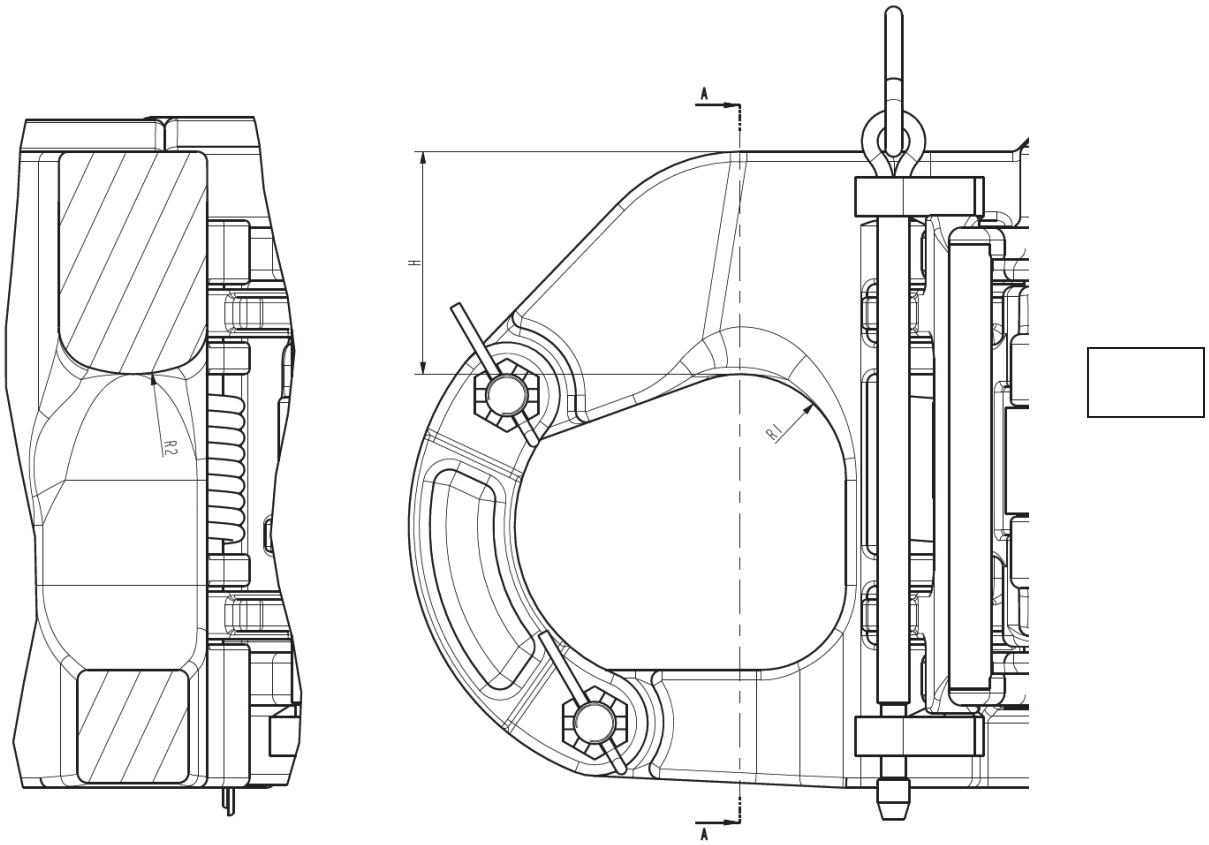

5 REMARKS

_____

_____

_____

_____

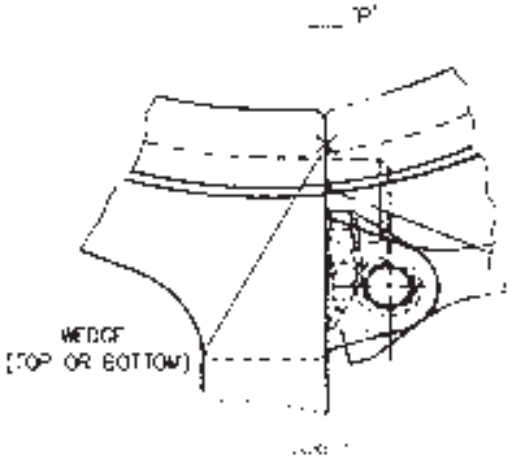

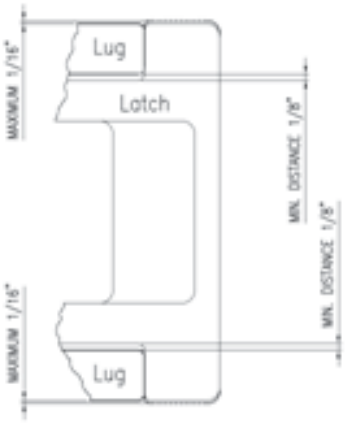

FIGURE 2

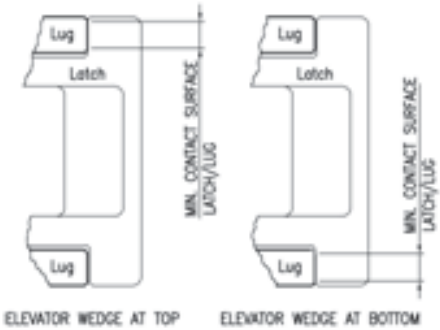

FIGURE 3

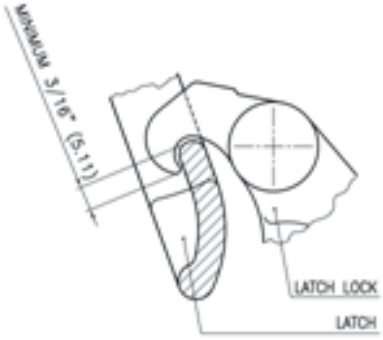

FIGURE 4

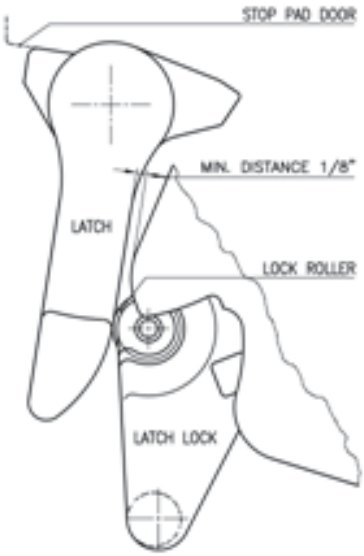

FIGURE 5

FIGURE 6

Varco BJ B.V. Nijverheidsweg 45 4879 AP Etten-Leur The Netherlands Tel: +31-76-5083000 Fax: +31-76-5046000	Revision:	Document No.:	Description:	Sheet:
	i	TSEL-0018 ECR 00014738	SLX test specification	10 of 10

NATIONAL OILWELL VARCO

TEST SPECIFICATION
TA - Series

Part Description:	
Part Number:	
Serial No.:	
Shop/Work Order:	
Date:	

3rd Party (if applicable) (approval / review / witnessed items)	(name)	(signature)
Final Inspection	(name)	(signature)
NOV Picker (complete delivery warehouse)	(name)	(signature)

1 FINAL INSPECTIONS AND DATABOOK INFORMATION

Reference serial number:_____

Part numbering and traceability information

Part	Part number	Heat-code/ Serial number	(*2) 1e 907	(*3) 2e 907	(*4) 910	Foundry/ Vendor
Body						
Door						
Latch						
H-pin						
L-pin						

(*2)Heatno's checked by: _____ Name, _____ Signature

(*3)Heatno's checked by:_____ Name, _____ Signature

(*4)Heatno's checked by:_____ Name, _____ Signature

2 General inspection

		Initials required: Operator	Initials required: Cross check
2.1	Check there are no sharp corners or edges on parts.		
2.2	Check there are no welding spatters.		
2.3	Check that the assembly has been load tested		
2.4	Check that the assembly has been MPI tested		
2.5	Check paint layer thickness according to specification. Measure and note down 3 positions randomly taken from the painted surfaces: Measurement 1; _____ Measurement 2; _____ Measurement 3:_____		
2.6	Check all blank surfaces have preservation applied (picker).		
2.7	Check painted surfaces for no chipping and a gloss finish (picker).		
2.8	Check all greasing points are greased		
2.9	Check all sliding surfaces have grease applied prior or after assembly.		
2.10	Check secondary retention rules have been applied as mentioned on the assembly drawing and secondary retention guide.		

Initials required;

	Operator	Quality Inspector

3 Before load test (For all Elevators)

3.1 Check marking on presence, legibility and verify with shop order;

3.1.1 Part number: _____

3.1.2 Serial number: _____

3.1.3 Bore code: _____

3.1.4 Rating: _____

3.2 Check if the latch is minimum 3/16” free from the door (fig 1).

Note down the measured dimension: _____

3.3 Check that the clearance between latch and door lug is 1/8” minimum (top and bottom)

3.4 Check if the lock is between 1/16” - 5/32” clear from the door lock surface (fig 1).

Note down the measured dimension: _____

3.5 Check if latch lock can rotate freely and if it is within the door guide’s (top and bottom)

3.6 Check if distance between the body and door is within 1/32”- 1/16”

Note down the measured dimension:_____ _____

3.7 Check that the distance between latch and door lug is minimum 3/16” (elevator closed and latch in maximum opened position) Note down

3.8 the measured dimension: _____

3.9 Check lock engage minimum 3/8” x 3/8” behind the lock surface from the door.

(For 32754, 39342, 200000 it should be 7/16” x 7/16”) (See fig 1 and 2)

3.10 Check if the clearance between the bottom side from the latch lock and the door guide is minimum 1/16” when the door is wedged up.

3.11 When the latch is pried from behind, the latch lock must prevent the latch from being opened.

3.12 Check that correct latch and latch lock spring are fitted and if the latch/latch lock can rotate freely and opens and closes very smoothly

3.13 Pipe opening:

If the bore is 2 7/8” or smaller the pipe opening should be at least 1 3/8” more than the actual bore.

Note down the measurements; _____

If the bore is between 2.7/8” and 5.1/2” the pipe opening should be 1.1/2.” more than the actual bore.

Note down the measurements: _____

If the bore is equal or bigger then 5.1/2” the pipe opening should be 2” more than the actual bore.

Note down the measurements: _____

At Part no 32383 the pipe opening only has to be 1” bigger than the actual bore.

Note down the measurements: _____

3.14 Check for reducing chamber in body under hinge and latch pin.

3.15 Check if link blocks can rotate freely to a minimum horizontal position.

4 After load test (For all Elevators)

		Initials required: Operator	Cross check
4.1	Check if elevator is load tested and MPI'd.		
4.2	Check there are no sharp corners, edges or weld spatter that can cause injury.		
4.3	Check there's no corrosion on pins, springs and machined areas.		
4.4	Check if latch and hinge pin are retained on the bottom side.		
4.5	Check when latch is fully open that both springs ends are correctly engaged and that the springs don't stick out.		
4.6	Check if hinge pin lock bar is engaged both sides for at least 3/16" (fig 3)		
4.7	Check if latch and latch lock pin on the top side are retained.		
4.8	Check if link blocks, bolts, nuts (on front side of elevator) and cotter pins are present.		
4.9	Check that grease nipples on door hinge boss are present and greased.		
4.10	Check if grease on latch/lug contact area, latch/latch-lock sliding area and one bore is present.		
4.11	Check if al stamping has been applied according to drawing and router.		
4.12	Check if info and read manual nameplate is present.		
4.13	Open and close the elevator 5 times slowly and 5 times quickly check that the elevator works without hesitation or hampering.		

4.14 Wedge elevator according to Wedge and measurement instruction TMA - TA elevator.

Measure the top and bottom bore and note down the dimensions as shown on picture

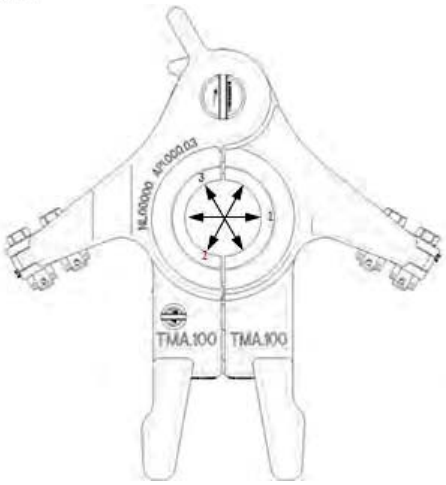

Top bore 1 _____ Bottom bore 1 _____

Top bore 2 _____ Bottom bore 2 _____

Top bore 3 _____ Bottom bore 3 _____

4.15 Check dimensions ears with gauge

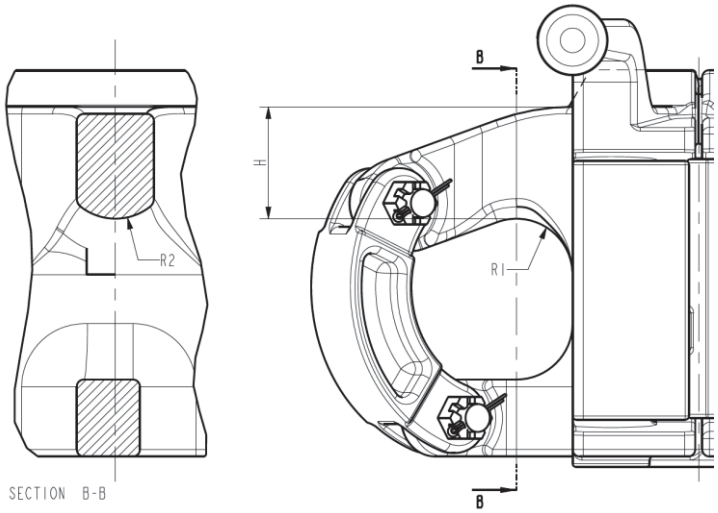

6 REMARKS

_____
_____
_____
_____

figuur1

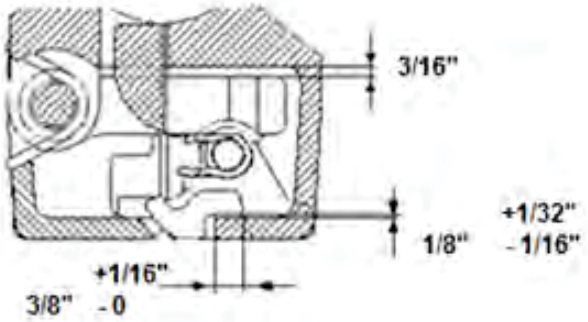

figuur 2

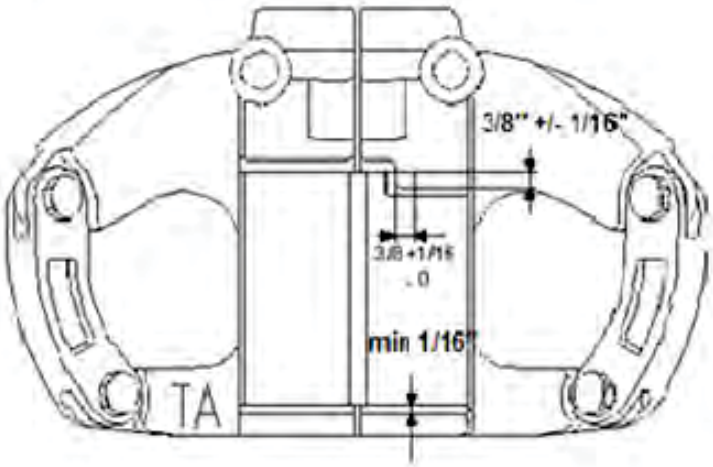

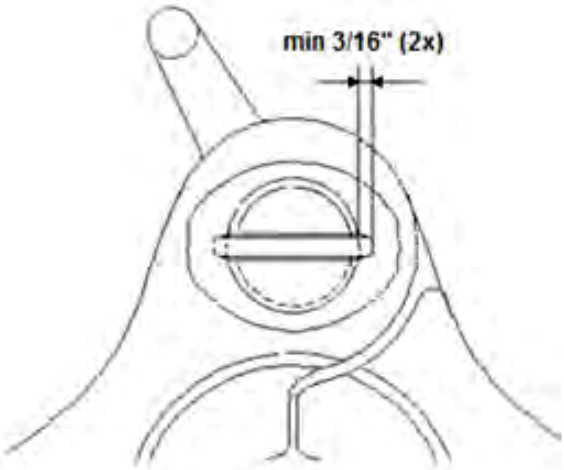

figuur 3

Varco BJ B.V. Nijverheidsweg 45 4879 AP Etten-Leur The Netherlands Tel: +31-76-5083000 Fax: +31-76-5046000	Revision: **H**	Document No.: **TSEL-0022** **ECR 00014738**	Description: **TA – Series test specification**	Sheet: **9 of 9**

NATIONAL OILWELL VARCO

TEST SPECIFICATION
SPL & SJL elevator

Part Description:	
Part Number:	
Serial No.:	
Shop/Work Order:	
Date:	

3rd Party (if applicable) (approval / review / witnessed items)	(name)	(signature)
Final Inspection	(name)	(signature)
NOV Picker (complete delivery warehouse)	(name)	(signature)

1 FINAL INSPECTIONS AND DATABOOK INFORMATION

Reference serial number:_____

Part numbering and traceability information

Part	Part number	Heat-code/ *Serial number*	(*2) 1e 907	(*3) 2e 907	(*4) 910	Foundry/ *Vendor*
Body						
Door						
Latch						
H-pin						
L-pin						

*(*2) Heatno's checked by:* _____*Name,* _____*Signature*

*(*3) Heatno's checked by:* _____*Name,* _____*Signature*

*(*4) Heatno's checked by:* _____*Name,* _____*Signature*

		Initials required	
		Operator	Quality Inspector
2	**General inspection**		
2.1	Check if there are no sharp corners or edges on parts.		
2.2	Check if there are no welding spatters.		
2.3	Check that the assembly has been load tested		
2.4	Check that the assembly has been MPI tested		
2.5	Check paint layer thickness according to specification.		
	Measure and note down 3 positions randomly taken from the painted surfaces:		
	Measurement 1; _____		
	Measurement 2; _____		
	Measurement 3:_____		
2.6	Check that all blank surfaces have preservation applied (picker).		
2.7	Check painted surfaces for no chipping and a gloss finish (picker).		
2.8	Check if all greasing points are greased		
2.9	Check if all sliding surfaces have grease applied prior or after assembly.		
2.10	Check secondary retention rules have been applied as mentioned on the assembly drawing and secondary retention guide.		

Initials required

3 Before Loadtest.

		Operator	Cross Checker
3.1	Check marking on presence, legibility and verify with shop order;		
	Part number: _____		
	Serial number: _____		
	Bore code (SJL only): _____		
	Rating: _____		
3.2	Check that the corner of the bore is chamfered 1/4”x45° (only for SJL).		
3.3	Check that latch makes a straight line contact with the lug when the elevator is wedged (SJL)		
3.4	Check that latch / lug contact is not less than 60%. (SPL) Estimate and note down % contact surface: _____		
3.5	Check that latch is free from the door (see fig 2)		
3.6	Latch lock hook is free from the lock pin when the elevator is wedged (see fig 2)		
3.7	Check if latch lock doesn’t hit against the lug during closing		
3.8	Check if latch and latch lock can rotate freely and open and close smoothly without hampering.		
3.9	Latch lock is within the door guides		
3.10	Check if latch lock is working by prying.		
3.11	Check that when opening the latch the lock moves (opens) before latch.		

3.12 Check that the Body stop fits into the cavity of the Door when elevator is fully opened.

3.13 Check if shackles fit over the lifting ears. Use shackle: 10998465-001. If interfering with cam, remove material from cam.

3.14 With elevator closed and latch at maximum open position measure the distance between the Latch and Lug surface. Gap must be max. 3/32" (see fig.3).
Note down the measured gap: _____

3.15 Distance of 1/4" between latch and door lug
(elevator closed and latch at maximum opened position)

Note down the measured gap: _____

3.16 With the elevator closed and latched measure clearance between the leg of the latch and the top and bottom flange of the door. The minimum distance must be 3/32".
Note down the measured gap on top: _____

Note down the measured gap on bottom: _____

3.17 Pipe opening;
When the bore is 2 7/8" or smaller the pipe opening should be 1" more than the actual bore.
Note down the measurements; _____

When the bore is between 2.7/8" and 5.1/2" the pipe opening should be 1.1/2." more than the actual bore.

Note down the measurements: _____

When the bore is equal or bigger then 5.1/2" the pipe opening should be 2" more than the actual bore.

Note down the measurements: _____

3.18 Open and close the elevator 5 times slowly and 5 times quickly check

that the elevator works without hesitation or hampering.

4 After load test

		Initials required	
		Operator	Quality Inspector
4.1	Hinge-pin lock-bar is engaged both sides at least 3/16” (see fig.1)		
4.2	Latch Pin on top side is retained.		
4.3	Spiral pin has been placed in Latch Lock Pin		
4.4	Check if grease nipple on hinge boss is present.		
4.5	Check safety chain is properly attached to the verification pin and elevator body.		
4.6	Slip Pin, spring and pipe plugs installed (6x, only SPL). Note: Pipe plug is allowed to stick out 1/16” (maximum)		
4.7	Check there is at least 1/4” material above the lock bar (see fig. 4)		
4.8	The ends of the latch springs have been trimmed. Note: Under tension, spring ends must stay fully engaged.		
4.9	Check if al stamping has been applied according to drawing and router.		

4.10 Wedge elevator according to Wedge and measurement instruction SJL elevator. Measure the top and bottom bore and note down the dimensions as shown on picture.

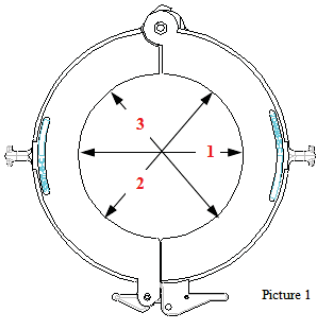

Picture 1

Top bore 1 _____ *Bottom bore 1* _____

Top bore 2 _____ *Bottom bore 2* _____

Top bore 3 _____ *Bottom bore 3* _____

4.11 Check ear dimensions with gauge

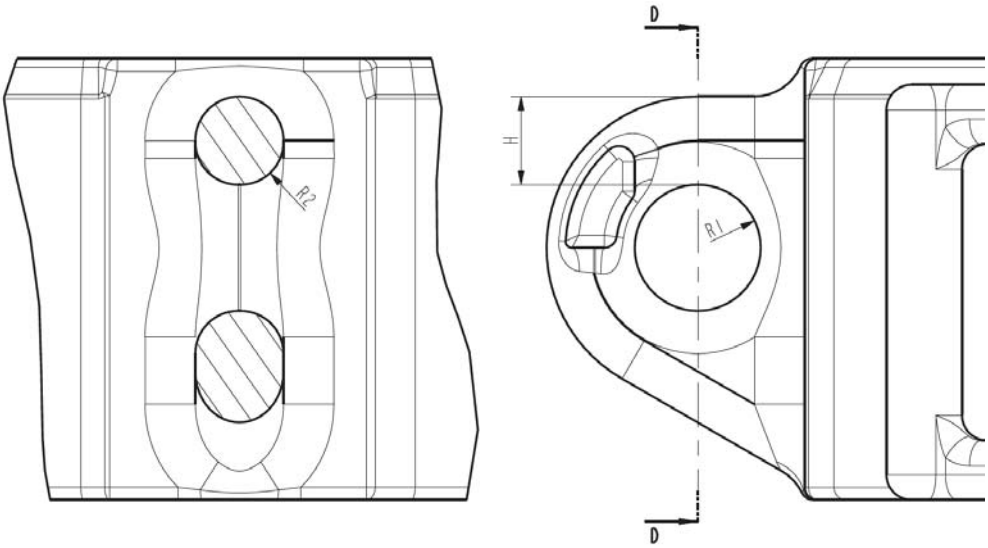

SECTION D-D

5 REMARKS

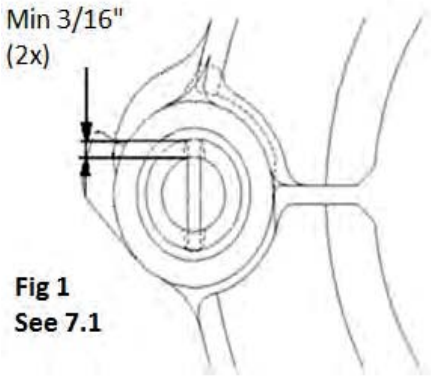

Fig 1
See 7.1

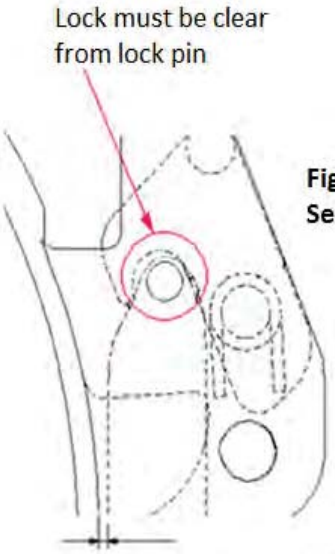

Fig 2
See 6.5 and 6.6

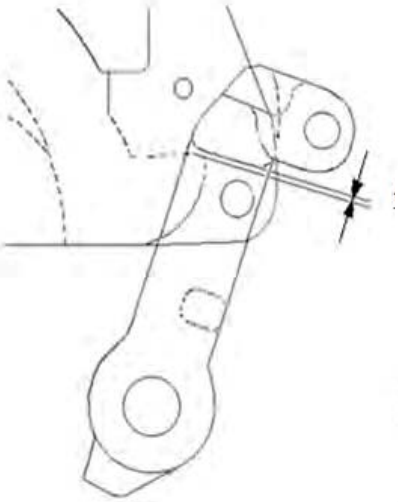

Fig 3
See 6.14

Fig 4
See 7.9

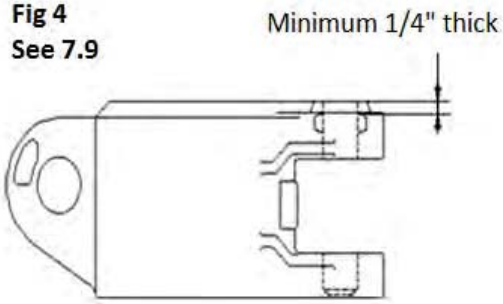

NATIONAL OILWELL VARCO

TEST SPECIFICATION
SLX DBL door

Part Description:	
Part Number:	
Serial No.:	
Shop/Work Order:	
Date:	

3rd Party (if applicable) (approval / review / witnessed items)	(name)	(signature)
Final Inspection	(name)	(signature)
NOV Picker (complete delivery warehouse)	(name)	(signature)

1 FINAL INSPECTIONS AND DATABOOK INFORMATION

Reference serial number:_____

Part numbering and traceability information

Description	Part number	Heat-code/ Serial number	Foundry/ Vendor
Body			
Door			
Door			
Latch			
Hinge pin			
Hinge pin			
Latch pin			

		Initials required	
		Operator	Quality Inspector
2	**General inspection**		
2.1	Check there are no sharp corners or edges on parts.		
2.2	Check there are no welding spatters.		
2.3	Check that the assembly has been load tested.		
2.4	Check that the assembly has been MPI tested.		
2.5	Check paint layer thickness according to specification. Measure and note down 3 positions randomly taken from the painted surfaces: Measurement 1: _____ Measurement 2: _____ Measurement 3: _____		
2.6	Check all blank surfaces have preservation applied (picker).		
2.7	Check painted surfaces for no chipping and a gloss finish (picker).		
2.8	Check all greasing points are greased		
2.9	Check all sliding surfaces have grease applied prior or after assembly.		
2.10	Check secondary retention rules have been applied as mentioned on the assembly drawing and secondary retention guide.		

3 Before load test

		Initials required; Operator	Quality Inspector
3.1	Check marking on presence, legibility and verify with shop order		
	Part number: _____		
	Serial number: _____		
	Bore code: _____		
	Rating: _____		
3.2	Check that both the lower door hinges make contact with both lower body hinges. (Use .006” feeler gage)		
3.3	Check for reducing chamber in body under both hinge pins. (fig 4)		
3.4	Check for reducing chamber in door under latch pin. (fig 4)		
3.5	Check if the latch and lug faces make contact and are parallel to each other. (Use .006” feeler gage)		
3.6	Check if the clearance between the latch and the door is 1/8” minimum. (Elevator wedged)(fig 2)		
	Note down the measured dimension: _____		
3.7	Latch lock hook is free from the latch. (fig 3)		
3.8	Check that the latch lock hook has clearance all around the door lug pin (fig 2)		
3.9	Check that correct latch spring is fitted.		
3.10	Check if during opening the lock is coming out first and after that the latch		
3.11	Check that latch is not forced outwards when elevator is wedged.		

3.12 Pull on lock handle to bring latch against stop check distance of 1/8" (min) between latch (in farthest open position) and lug.

Note down the measured gap: _____

3.13 Check if the latch lock prevents the latch from being opened when the latch is pried from behind in closed position

3.14 Check that the latch and the latch lock can rotate freely and opens and closes very smoothly

3.15 Check that the latch lock hook has a minimum clearance of 1/8"at the top and bottom in the door lug cavity (fig 3)

Note down the measured dimension:_____

3.16 Check if the clearances between latch and door lug is 1/8" minimum at the top and bottom of the door. (fig 3)

Note down the measured dimension: _____

3.17 Make sure that the elevator closes correctly (latch and latch lock) when pushing the right door as far as possible to the inside.

3.18 Check when both doors are fully open that the smallest dimension between the doors is bigger than the actual pipe dia.

Note down measurements; _____

3.19 Check if link blocks can rotate freely to a minimum horizontal position.

3.20 Check that door lug pin is welded on both ends

3.21 Open and close the elevator 5 times slowly and 5 times quickly check that the elevator works without hesitation or hampering.

4 After load test

		Initials required; Operator	Quality Inspector
4.1	Check if elevator is load tested and MPI'd.		
4.2	Check there are no sharp corners, edges or weld spatter that can cause injury.		
4.3	Check there's no corrosion on pins, springs and machined areas.		
4.4	Check that both the hinge pins and the latch pin on the upper side are retained with a dowel-pin and the edges from the hole for the dowel pin are riveted. (fig 1)		
4.5	Check if the latch lock pin retained with Bolt, Nut and Retainerpin (fig 1)		
4.6	Check if link blocks, bolts, nuts (on front side of elevator) and cotter pins are present.		
4.7	Check if the ends of the latch spring have been trimmed. Note: Under tension, spring ends must stay fully engaged. (fig 2)		
4.8	Check that grease nipple's on doors hinge boss and on the latch cam are present are present.		
4.9	Check if grease on latch/lug contact area, latch/latch-lock sliding area and one bore are present.		
4.10	Check if safety chain is properly attached to the verification pin and elevator door and if connecting links are welded. (2x)		
4.11	Check when door is closed that the position of the safety latch lock pin ensures that the elevator is properly latched and locked and the elevator won't open.		
4.12	Check that the installed 'safety latch lock' pin is positioned at bottom as drawn in fig 5		

4.13 Open and close the elevator 5 times slowly and 5 times quickly check that the elevator works without hesitation or hampering.

4.14 Measure bore:

Top bore

Note down the measurements; _____

Bottom bore

Note down the measurements; _____

4.15 Check if al stamping has been applied according to drawing and router.

4.16 Check dimensions of ears with gauge

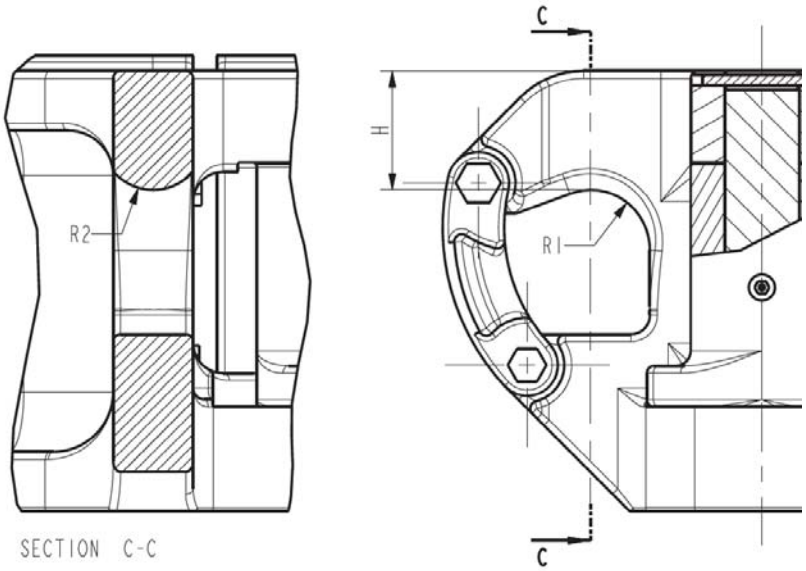

5 REMARKS

_____

_____

_____

_____

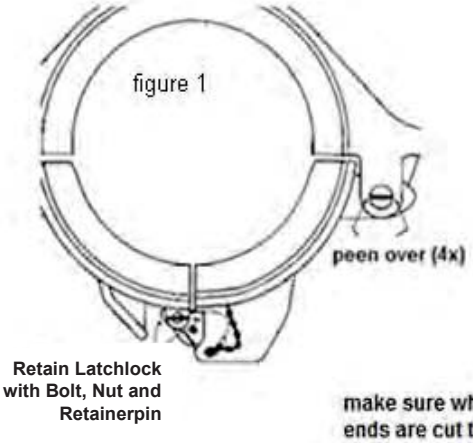

figure 1

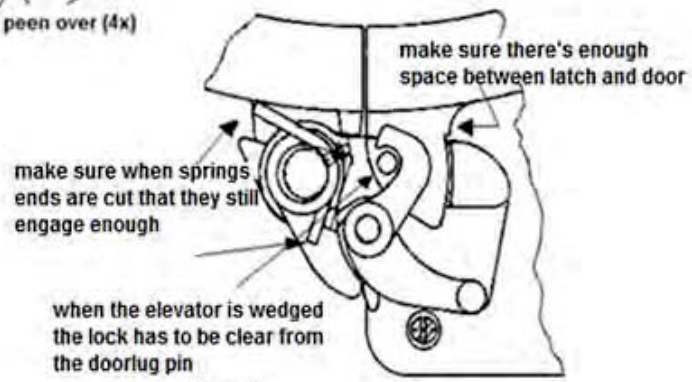

figure 2

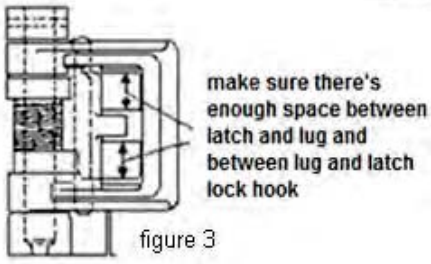

figure 3

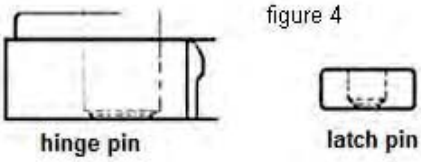

figure 4

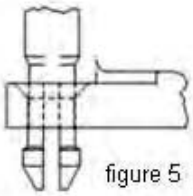

figure 5

VarcoBJ
A Varco Company

Configuration :_____

Serial Number :_____

Part Number :_____

Part Description :_____

Test Technician Name :_____

3rd Party Witness Agency :_____

3rd Party Witness Name :_____

3rd Party Witness Signature :_____

Test Date :_____

Remarks :_____
:_____
:_____

TEST SPECIFICATION

	Name:	Date	C				
Prepared	D.M	11 August '98	B				
Checked	A. de Pont	11 August '98	A	563901	D.M.	6 August '98	A. de Pont
Approved	A. de Pont	11 August '98	Rev.	ECN	Name	Date	Checked

Document No.: **TSEL 0052**

Title: **Check list safety pin kit SLX double door elev.**

Sheet: **1 of 3**
Rev A

VarcoBJ
A Varco Company

Non Destructive Examination:

1. **Visually check;**
   - **the welded parts to verify that they are welded all round to prevent water etc. from entering the joints.** ❒ **OK**
   - **that the edges of both plates align with the edge of the Door.** ❒ **OK**

2. **MPI the welds.** ❒ **OK**

Functional Testing:

1. **With both Doors open, install the safety lock pin. Check that the Doors can't close (latch will hit the pin preventing the Doors from closing).** ❒ **OK**

2. **With the safety lock pin in storage hole, close the 'left' Door sitting on the bottom hinge lug, and the 'right' Door tilted up against the top hinge lug. Repeat closing of these Doors this time with the left Door tilted up against the top hinge lug and the right Door sitting on the bottom hinge lug Check in both cases that the Doors close the latch engage and properly locks.**
   (due to too big clearance in the hinge area it could be possible that the latch hits the top or bottom lock pin plate preventing proper Door closing, adjust clearance with spacers. Keep Door collar in line with Body collar). ❒ **OK**

3. **With both Doors closed and latched install the safety lock pin. Verify that the position of the pin is such that it ensures that the latch lock is engaged at all times.** ❒ **OK**

4. **Verify that bottom of the pin when inserted, in lock or storage hole, is positioned as drawn.** ❒ **OK**

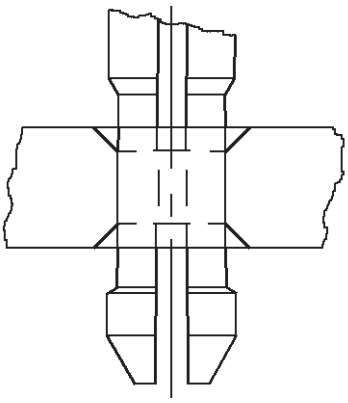

	Name:	Date	C				
Prepared	D.M	11 August '98	B				
Checked	A. de Pont	11 August '98	A	563901	D.M.	6 August '98	A. de Pont
Approved	A. de Pont	11 August '98	Rev.	ECN	Name	Date	Checked

Document No.: **TSEL 0052**

Title: **Check list safety pin kit SLX double door elev.**

Sheet: **2 of 3**
Rev A

VarcoBJ
A Varco Company

5. **Disengage the latch lock. Check that latch can't be pried open.** ❒ **OK**

6. **Check that the safety lock pin can only be installed when elevator is properly latched.** ❒ **OK**

7. **With safety lock pin installed check that chain can't get trapped (by wire line) which can cause the chain to be pulled up and consequently the safety lock pin to be pulled out.** ❒ **OK**

	Name:	Date	C				
Prepared	D.M	11 August '98	B				
Checked	A. de Pont	11 August '98	A	563901	D.M.	6 August '98	A. de Pont
Approved	A. de Pont	11 August '98	Rev.	ECN	Name	Date	Checked

Document No.: **TSEL 0052**

Title: **Check list safety pin kit SLX double door elev.**

Sheet: **3 of 3**
Rev A

NATIONAL OILWELL VARCO

TEST SPECIFICATION
G-Series

Part Description:	
Part Number:	
Serial No.:	
Shop/Work Order:	
Date:	

3rd Party (if applicable) (approval / review / witnessed items)	(name)	(signature)
Final Inspection	(name)	(signature)
NOV Picker (complete delivery warehouse)	(name)	(signature)

1 FINAL INSPECTIONS AND DATABOOK INFORMATION

Reference serial number:_____

Part numbering and traceability information

Part	Part number	Heat-code/ Serial number	(*2) 1e 907	(*3) 2e 907	(*4) 910	Foundry/ Vendor
Body						
Door						
Latch						
H-pin						
L-pin						

(*2) heat no's checked by:_____ Name, _____Signature

(*3) heat no's checked by:_____ Name, _____Signature

(*4) heat no's checked by:_____ Name, _____Signature

		Initials required	
2	**General inspection**	**Operator**	**Quality Inspector**
2.1	Check there are no sharp corners or edges on parts.		
2.2	Check there are no welding spatters.		
2.3	Check that the assembly has been load tested		
2.4	Check that the assembly has been MPI tested		
2.5	Check paint layer thickness according to specification. Measure and note down 3 positions randomly taken from the painted surfaces: Measurement 1; _____ Measurement 2; _____ Measurement 3:_____		
2.6	Check all blank surfaces have preservation applied (picker).		
2.7	Check painted surfaces for no chipping and a gloss finish (picker).		
2.8	Check all greasing points are greased		
2.9	Check all sliding surfaces have grease applied prior or after assembly.		
2.10	Check secondary retention rules have been applied as mentioned on the assembly drawing and secondary retention guide.		

		Initials required	
		Operator	Quality Inspector
3	**Before load test (For all Elevators)**		
3.1	Check marking on presence, legibility and verify with shop order;		
3.1.1	Part number: _____		
3.1.2	Serial number: _____		
3.1.3	Bore code: _____		
3.1.4	Rating: _____		
3.2	Check that correct latch and latch lock spring are fitted.		
3.3	Check for clearance of min 1/4” between latch and door lug, elevator closed and latch in the maximum opened position.		
3.4	Check that clearance between body and door is within 1/32” – 1/16” (see fig 2). *Note down the measured dimension:*_____		
3.5	Visually check that the latch is seated as in figure 1		
3.6	Check if the latch lock prevents the latch from being opened when the latch is pried from behind in closed position		
3.7	Check that clearance between latch and door is 1/8” minimum, (elevator wedged, see fig 1a) *Note down the measured dimension:*_____		
3.8	Check that clearance between latch and door lug is 1/8” minimum (elevator wedged, top and bottom of door lug, see fig 3) *Note down the measured dimension:*_____		
3.9	Check that latch and lug faces make contact and are parallel to each other (elevator wedged, see figure 4)		

3.10 Check if the Latch is between a 87° and 90° angle (A), and the Latch surface is equal or past the Lug surface at the back of the Lug (B).

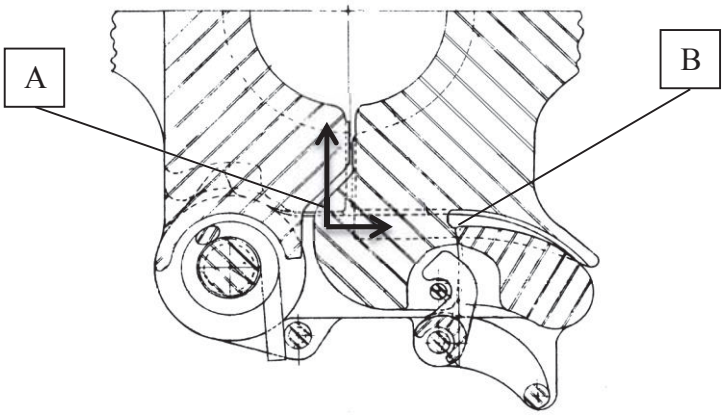

3.11 Check that latch is not forced outwards when elevator is wedged.

3.12 Check that the lock hook has clearance all around the door lug pin. (Elevator wedged, See fig 1)

3.13 Check that the lock hook has a minimum clearance of 1/8”, top and bottom in the lug door cavity.

3.14 Check that the latch lock can rotate freely.

3.15 Check that the latch lock handle is protected sufficiently by the guard lugs.

3.16 Hang the elevator in the open position (tilted forward) and check that the latch doesn’t move forward and when pulled open returns abruptly to its stop (not applicable air op)

3.17 Check whether pipe opening is as per table. Body and door hinge boss must not interfere with each other.

HGG 8.5/8"(min) Note down measurements; _____

GG 7.1/2"(min) Note down measurements; _____

MGG 7.1/2"(min) Note down measurements; _____

RGG 5.1/2"(min) Note down measurements; _____

RGA 6.1/2"(min) Note down measurements; _____

GA 7.1/2"(min) Note down measurements; _____

MG 7"(min) Note down measurements; _____

3.18 Check for reducing chamber in body under hinge pin. (Not applicable air op or for MG)

3.19 Check for reducing chamber in body under latch pin.

3.20 Check if link blocks can rotate freely to a minimum horizontal position.

3.21 Check that door lug pin is welded both ends

		Initials required	
4	**After load test (For all Elevators)**	**Operator**	**Quality Inspector**
4.1	Check if elevator is load tested and MPI'd		
4.2	Check there are no sharp corners, edges or weld spatter that can cause injury.		
4.3	Check there's no corrosion on pins, springs and machined areas		
4.4	Check if hinge pin and latch pin lock bar are engaged both sides for at least 3/16" (not for MG)		
4.5	Check if hinge pin is riveted over on both sides and that the latch pin is retained with a dowel pin (only for MG)		
4.6	Check for nut and cotter pin on latch lock bolt.		
4.7	Check if link blocks, bolts, nuts (on front side of elevator) and cotter pins are present.		
4.8	Check when latch is fully open that both springs ends are correctly engaged.		
4.9	Check for presence of tack weld on latch spring stop. (Lock pin from MG should be riveted over on 2 sides)		
4.10	Check that grease nipple on door hinge boss is present.		
4.11	Check if grease on latch/lug contact area, latch/latch-lock sliding area and one bore are present.		
4.12	If wear bushings are fitted, check that retaining bolts are installed and that they are lock wired. Also check that the bore diameter is correct and that they do not obstruct the elevator from closing		

4.13 Open and close the elevator 5 times slowly and 5 times quickly check that the elevator works without hesitation or hampering.

4.14 Wedge elevator according to Wedge and measurement instruction G elevator. Measure the bore and note down the dimensions as shown on picture

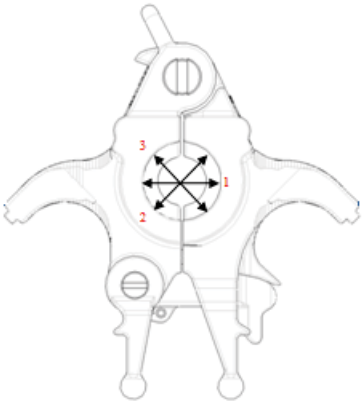

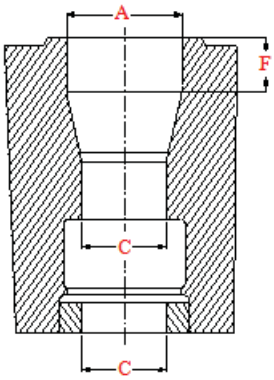

Top bore(A) 1 _____ *Bottom bore(C) 1* _____

Top bore (A) 2 _____ *Bottom bore(C) 2* _____

Top bore (A) 3 _____ *Bottom bore(C) 3* _____

F – dimension _____

4.15 Check ears with gauge

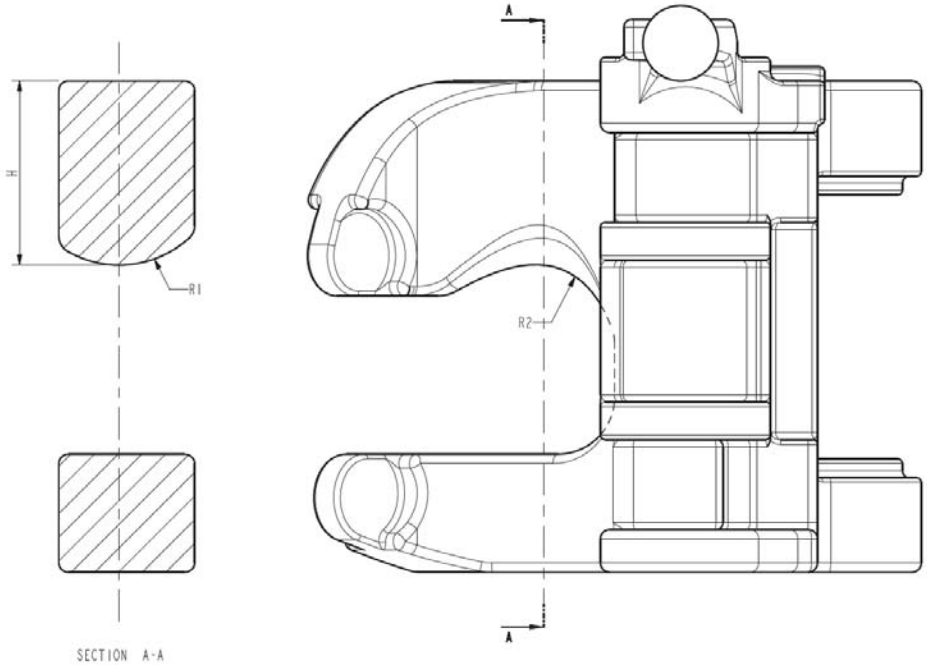

Left ear height H	
Left ear radius R1	
Left ear radius R2	
Right ear height H	
Right ear radius R1	
Right ear radius R2	

5 REMARKS

_____

_____

_____

_____

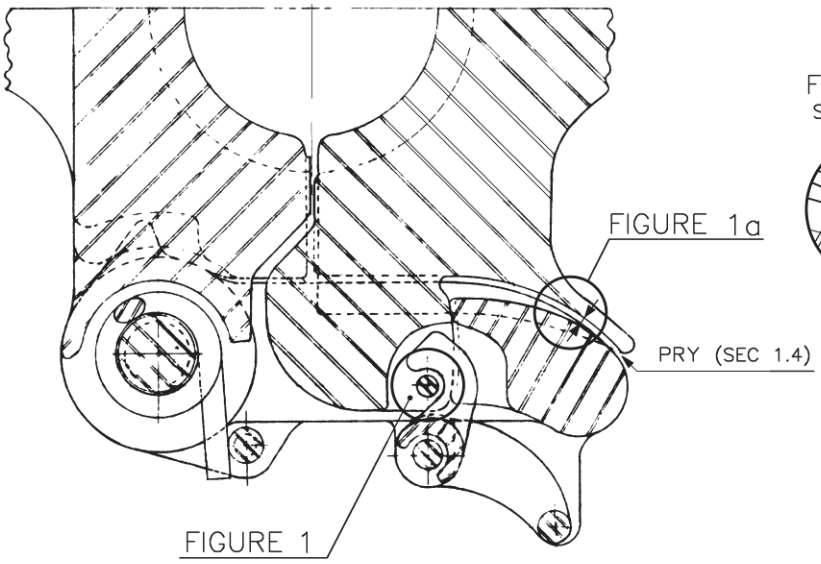

FIGURE 1a
SCALE 2:1

FIGURE 1
SCALE 2:1

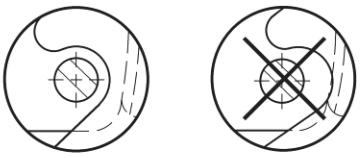

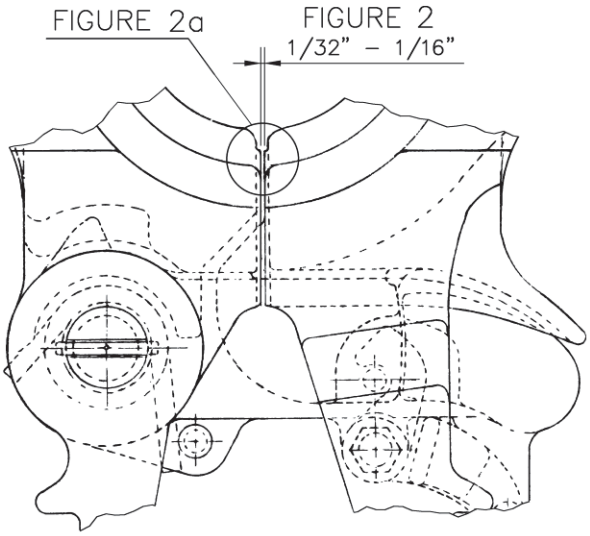

FIGURE 2a
SCALE 2:1

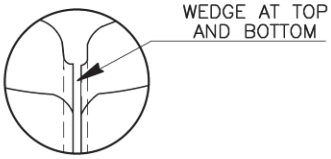

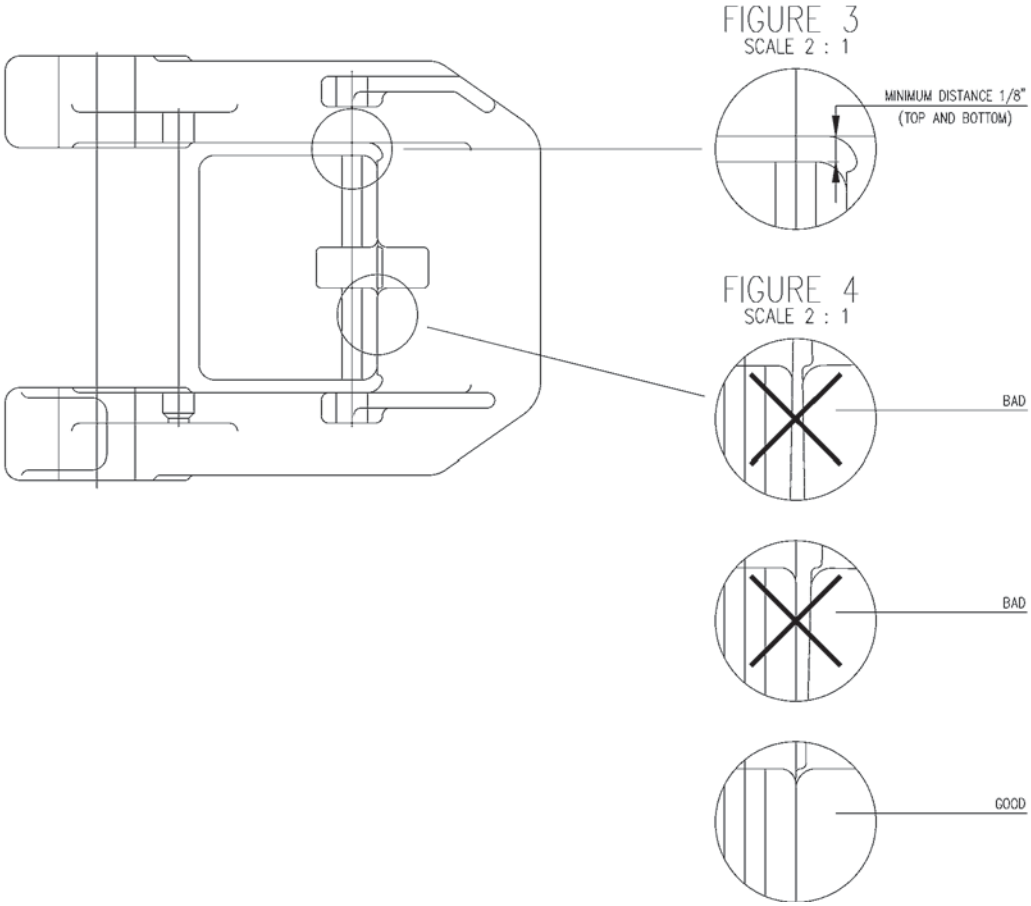

NATIONAL OILWELL VARCO

TEST SPECIFICATION
Y-Series

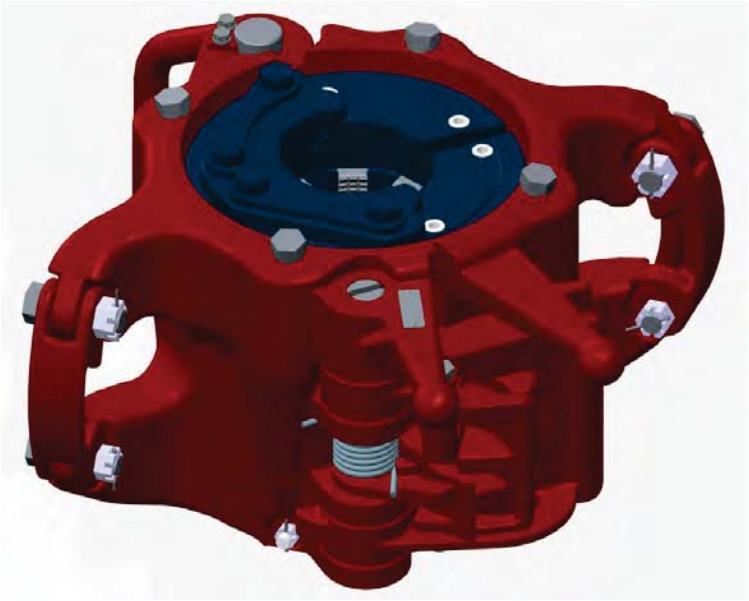

Part Description:	
Part Number:	
Serial No.:	
Shop/Work Order:	
Date:	

3rd Party (if applicable) (approval / review / witnessed items)	(name)	(signature)
Final Inspection	(name)	(signature)
NOV Picker (complete delivery warehouse)	(name)	(signature)

1 FINAL INSPECTIONS AND DATABOOK INFORMATION

Reference serial number:_____

Part numbering and traceability information

Description	Part number	Heat-code/ *Serial number*	Foundry/ *Vendor*
Body			
Door			
Latch			
Hinge pin			
Latch pin			

2 General inspection

		Initials required: Operator	Initials required: Cross check
2.1	Check there are no sharp corners or edges on parts.		
2.2	Check there are no welding spatters.		
2.3	Check that the assembly has been load tested.		
2.4	Check that the assembly has been MPI tested.		
2.5	Check paint layer thickness according to specification Measure and note down 3 positions randomly taken from the painted surfaces: Measurement 1; _____ Measurement 2; _____ Measurement 3:_____		
2.6	Check all blank surfaces have preservation applied (picker).		
2.7	Check painted surfaces for no chipping and a gloss finish (picker).		
2.8	Check all greasing points are greased		
2.9	Check all sliding surfaces have grease applied prior or after assembly.		
2.10	Check secondary retention rules have been applied as mentioned on the assembly drawing and secondary retention guide.		

Initials required

3 Before load test

		Operator	Cross check
3.1	Check marking on presence, legibility and verify with shop order;		
3.1.1	Part number: _____		
3.1.2	Serial number: _____		
3.1.3	Bore code: _____		
3.1.4	Rating: _____		
3.2	Check that correct latch and latch lock spring are fitted.		
3.3	Check for clearance of min 1/4" between latch and door lug, elevator closed and latch in the maximum opened position.		
3.4	Check that clearance between body and door is within 1/32" – 1/16", elevator closed and latch contacting the door lug.		
	*Note down the measured dimension:*_____		
3.5	Check that latch cam turns easily (YT-YC elevators only)		
3.6	Check for sufficient room for hand behind lock for opening latch.		
3.7	Check if the latch lock prevents the latch from being opened when the latch is pried from behind in closed position.		
3.8	Check that clearance between latch and door is 1/8" minimum, (elevator wedged, see fig 3) (for HYT clearance has to be 1/4")		
	*Note down the measured dimension:*_____		
3.9	Check that clearance between latch and door lug is 1/8" minimum (elevator wedged, top and bottom of door lug, see fig 5)		
	*Note down the measured dimension:*_____		

3.10 Check that latch and lug faces make 75-80% contact and are parallel to each other (elevator wedged)

3.11 Check that latch is not forced outwards when elevator is wedged.

3.12 Check that the lock hook has clearance all around the door lug pin. (Elevator wedged, See fig 3) (HYT not applicable)

3.13 Check that the lock hook has a minimum clearance of 1/8", top and bottom in the lug door cavity. (HYT not applicable, see Fig 5)

3.14 Check for overlap of latch lock behind door is in accordance with drawing (HYT only, Fig 4)

3.15 Check that the latch lock can rotate freely and is correctly assembled.

3.16 Check that the latch lock handle is protected sufficiently by the guard lugs. (Fig 3)

3.17 Hang the elevator in the open position (tilted forward) and check that the latch doesn't move forward and when pulled open returns abruptly to its stop (not applicable air op)

3.18 Check whether pipe opening is as per table. Body and door hinge boss must not interfere with each other.

HYC 9"(min) Note down measurements; _____

HYT 5"(min) Note down measurements; _____

YT 5"(min) Note down measurements; _____

YC 9"(min) Note down measurements; _____

MYT 4 7/8"(min) Note down measurements; _____

LYT 4 1/16"(min) Note down measurements; _____

MYC 9"(min) Note down measurements; _____

3.19 Check for reducing chamber in body under hinge pin. (HYC manual, MYC, HYT & YT)

3.20	Check for reducing chamber in body under latch pin.		
3.21	Check that door lug pin is correctly retained.		
3.22	Check if link blocks can rotate freely to a minimum horizontal position.		
3.23	Check that slip set can move up and down freely.		
3.24	Check that elevator can move along pipe without hesitation when slips are in free position.		
3.25	Check slip inserts make full contact with pipe with slips set.		
3.26	Check that offset on slip back makes correct (line)contact with elevator taper.		
3.27	Check that slip segments do not interfere with each other when set.		
3.28	Check that guide lug on top (MYT) is ground in accordance with drawing.		
3.29	Open and close the elevator 5 times slowly and 5 times quickly check that the elevator works without hesitation or hampering.		

4 After load test

		Initials required: Operator	Initials required: Cross check
4.1	Check if elevator is load tested and MPI'd		
4.2	Check there are no sharp corners, edges or weld spatter that can cause injury.		
4.3	Check there's no corrosion on pins, springs and machined areas.		
4.4	Check if hinge pin and latch pin are correctly retained. (Fig 1 and 2)		
4.5	Check that latch lock pin is correctly retained.		
4.6	Check that door lug pin is correctly retained (not applicable HYT elevator)		
4.7	Check that elevator has 4 slip bolts and 4 slip springs fitted.		
4.8	Check that elevator has 4 lock washers under slip bolts. (HYC, MYC & YC)		
4.9	Check for cotter pins in slip bolts (LYT only)		
4.10	Check for bottom guide plate screws, nuts and cotter pins (4X). (HYC, MYC & YC)		
4.11	Check if guide plate at top of elevator is correctly mounted on the elevator and if bolts are correctly lock wired.		
4.12	Check if link blocks, bolts, nuts (on front side of elevator) and cotter pins are present.		
4.13	Check when latch is fully open that both springs ends are correctly engaged.		
4.14	Check for presence of tack weld on latch spring stop. (HYC & MYC)		

4.15 Check that all grease nipples are present and greased.

4.16 Check if grease on latch/lug contact area, latch/latch-lock sliding area and one bore are present.

4.17 Open and close the elevator 5 times slowly and 5 times quickly check that the elevator works without hesitation or hampering.

4.18 Check that the bore taper dimension is according to the drawing.

4.19 Check dimensions of ears with gauge

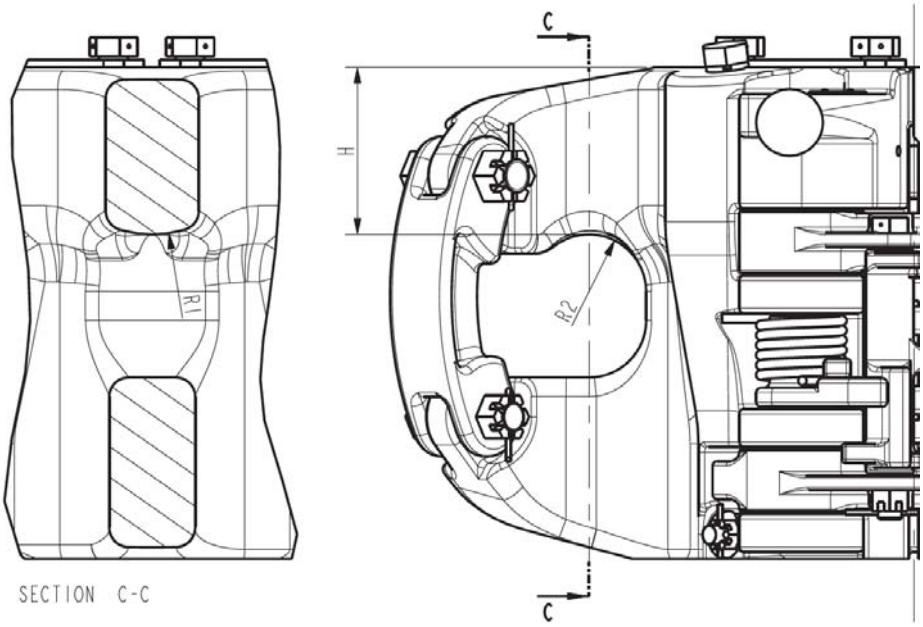

5 REMARKS

HINGE PIN

Fig 1

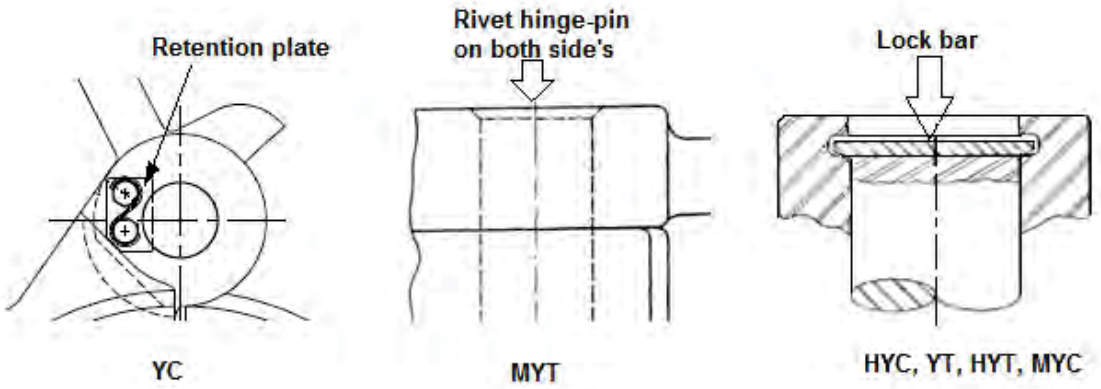

LATCH PIN

Fig 2

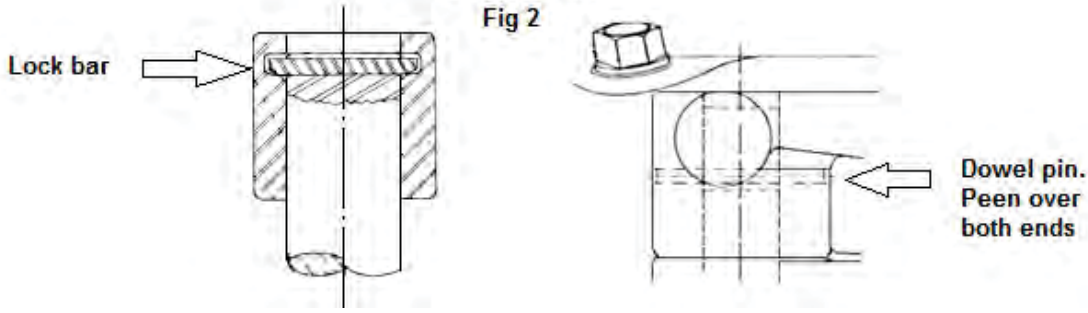

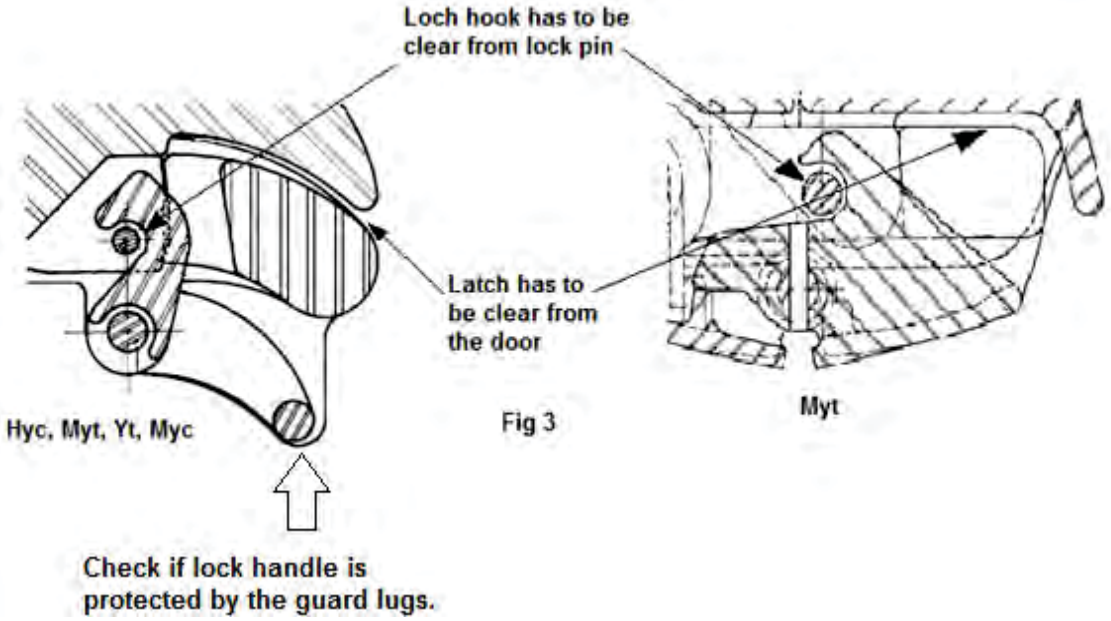

Fig 3

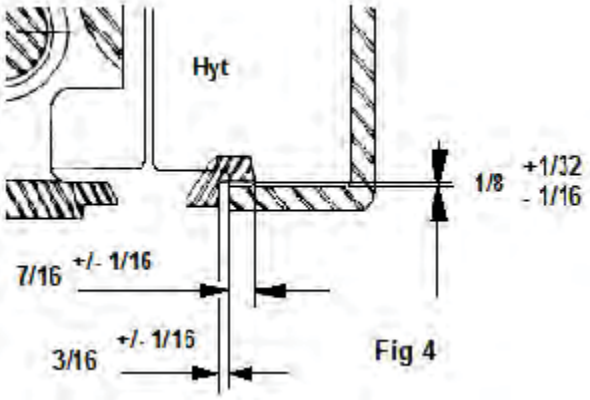

Fig 4

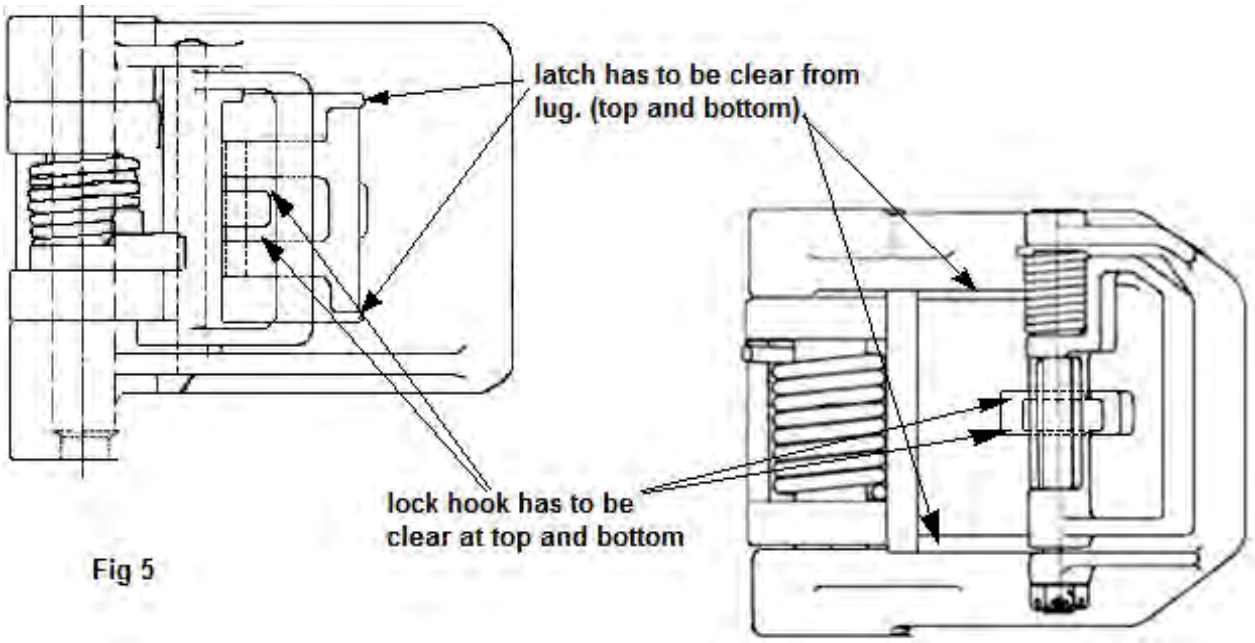

Fig 5

NATIONAL OILWELL VARCO

TEST SPECIFICATION
SJX elevator

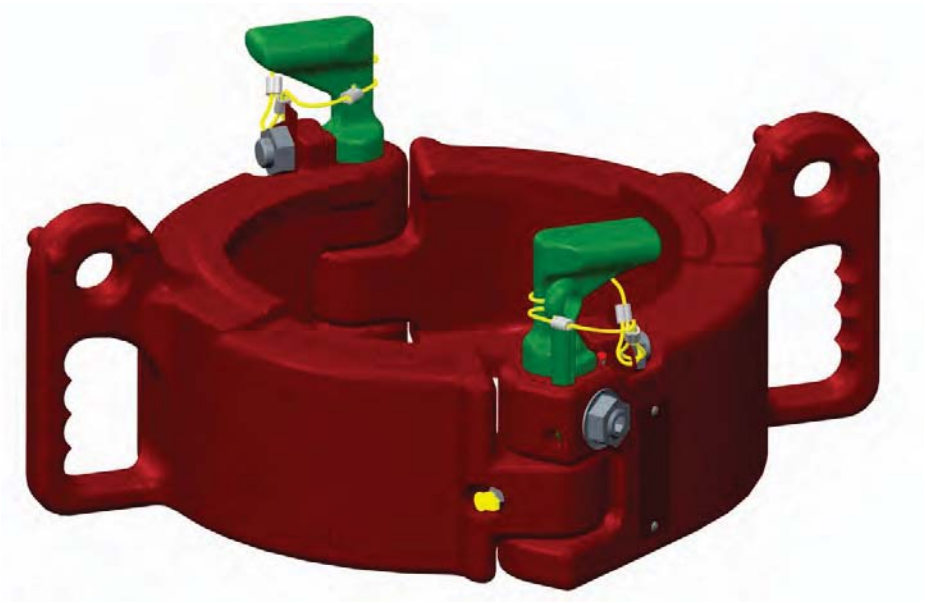

Part Description:	
Part Number:	
Serial No.:	
Shop/Work Order:	
Date:	

3rd Party (if applicable) (approval / review / witnessed items)	(name)	(signature)
Final Inspection	(name)	(signature)
NOV Picker (complete delivery warehouse)	(name)	(signature)

1 FINAL INSPECTIONS AND DATABOOK INFORMATION

Reference serial number:_____

Part numbering and traceability information

Part	Part number	Heat-code/ Serial number	(*2) 1e 907	(*3) 2e 907	(*4) 910	Foundry/ Vendor
Body						
Body						
H-pin						
H-pin						

(*2) Heatno's checked by: _____Name, _____Signature

(*3) Heatno's checked by: _____Name, _____Signature

(*4) Heatno's checked by: _____Name, _____Signature

2 General inspection

		Initials required: Operator	Initials required: Quality Inspector
2.1	Check there are no sharp corners or edges on parts.		
2.2	Check there are no welding spatters.		
2.3	Check that the assembly has been load tested		
2.4	Check that the assembly has been MPI tested		
2.5	Check paint layer thickness according to specification. Measure and note down 3 positions randomly taken from the painted surfaces: Measurement 1:_____ Measurement 2:_____ Measurement 3:_____		
2.6	Check all blank surfaces have preservation applied (picker).		
2.7	Check painted surfaces for no chipping and a gloss finish (picker).		
2.8	Check all greasing points are greased		
2.9	Check all sliding surfaces have grease applied prior or after assembly.		
2.10	Check secondary retention rules have been applied as mentioned on the assembly drawing and secondary retention guide.		

		Initials required	
		Operator	Quality Inspector
3	**Before painting**		
3.1	Check marking on presence, legibility and verify with shop order;		
3.1.1	Part number: _____		
3.1.2	Serial number: _____(on both halves)		
3.1.3	Bore code: _____		
3.1.4	Rating: _____		
3.2	Check if elevator is load tested en MPI checked.		
3.3	Check there are no sharp corners, edges that can cause injury or weld spatter		
3.4	Check if the lifting shackle fits over the lifting ear (both halves)		
3.5	Check whether pipe opening is minimum 1” bigger than the actual pipe dia. (on both halves) Note down the measurements; _____		
	Note down the measurements; _____		
3.6	Check that grease nipples on doors hinge boss are present. (2x)		
3.7	Check if grease on contact areas, on internal bore, in hinge-pin hole’s and on the shaft of the hinge-pins is present.		
3.8	Check if hinge-pins can rotate freely and move up and down without interfering with the hinge-bosses or the lock screw. (Hanging in the crane)		
3.9	Check that the key lock pins cannot be fully pulled out the hinge boss when retaining pin is removed		

3.10	Check that the key lock pin can't rotate to an open position when the retaining pin is installed in the elevator.		
3.11	Check that the key lock pins are retained by the bale nose plunjer when the key lock pin is rotated to the closed position.		
3.12	Open and close the elevator 5 times slowly and 5 times quickly check that the elevator works without hesitation or hampering		

Initials required

4 After Painting

		Operator	Quality Inspector
4.1	Check there's no paint in de key lock pin hole's, at the inner bore or at the shaft of the pins.		
4.2	Check if the bale nose plunjer is retained with a nut and that the nut is retained with a tap washer.		
4.3	Check if the hinge pins are retained with a lock screw and a cable, the lock screw is retained with a nut and that the nut is retained with a tap washer.		
4.4	Check if the retainer pin is attached to the elevator with a cable that is attached to the tab washer.		
4.5	Check there's grease on the contact areas, grease nipples (2x) and on the internal bore		
4.6	Open and close the elevator 5 times slowly and 5 times quickly check that the elevator works without hesitation or hampering.		

4.7 Wedge elevator according to Wedge and measurement instruction SJX elevator. Measure the top and bottom bore and note down the dimensions as shown on picture

Top bore 1 _____ Bottom bore 1 _____

Top bore 2 _____ Bottom bore 2 _____

Top bore 3 _____ Bottom bore 3 _____

4.8 Check ears dimensions with gauge

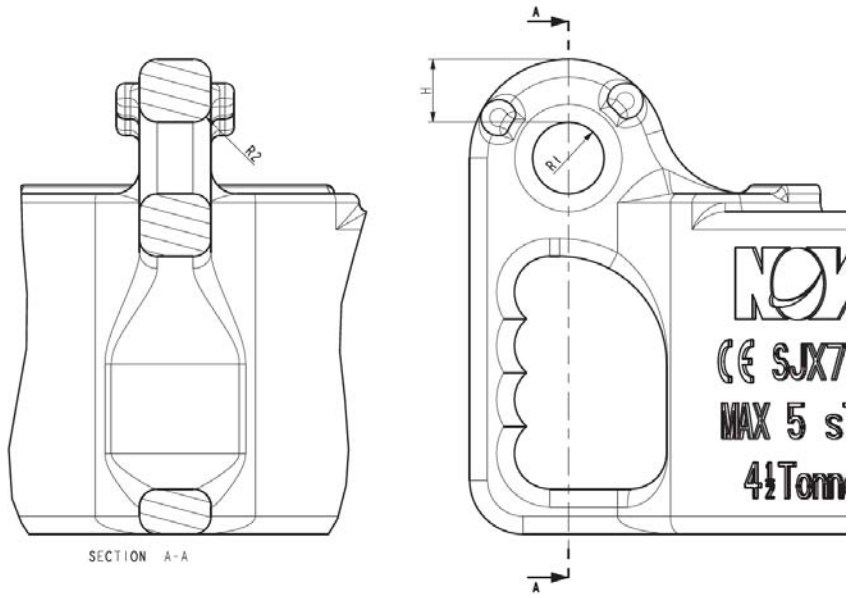

5 REMARKS

_____
_____
_____
_____

NATIONAL OILWELL VARCO

TEST SPECIFICATION
SJH elevator

Part Description:	
Part Number:	
Serial No.:	
Shop/Work Order:	
Date:	

3rd Party (if applicable) (approval / review / witnessed items)	(name)	(signature)
Final Inspection	(name)	(signature)
NOV Picker (complete delivery warehouse)	(name)	(signature)

Varco BJ B.V. Nijverheidsweg 45 4879 AP Etten-Leur The Netherlands Tel: +31-76-5083000 Fax: +31-76-5046000	Revision: **A**	Document No.: **TSEL-0148** **ECR 34768**	Description: **SJH test specification**	Sheet: **1 of 5**

1 FINAL INSPECTIONS AND DATABOOK INFORMATION

Reference serial number:_____

Part numbering and traceability information

Description	Part number	Heat-code/ Serial number	Foundry/ Vendor
Body			
Latch			
Hinge pin SJH			
Hinge pin SJH			

NATIONAL OILWELL VARCO

2 General inspection

		Initials required: Operator	Initials required: Cross checker
2.1	Check there are no sharp corners or edges on parts.		
2.2	Check there are no welding spatters.		
2.3	Check that the assembly has been load tested.		
2.4	Check that the assembly has been MPI tested.		
2.5	Check paint layer thickness according to specification. Measure and note down 3 positions randomly taken from the painted surfaces: Measurement 1. _____ Measurement 2. _____ Measurement 3._____		
2.6	Check all blank surfaces have preservation applied (picker).		
2.7	Check painted surfaces for no chipping and a gloss finish (picker).		
2.8	Check all greasing points are greased.		
2.9	Check all sliding surfaces have grease applied prior or after assembly.		
2.10	Check secondary retention rules have been applied as mentioned on the assembly drawing and secondary retention guide.		

NATIONAL OILWELL VARCO

		Initials required	
		Operator	Cross Checker
3	**Before load test**		
3.1	Check marking on presence, legibility and verify with shop order;		
3.1.1	Part number: _____		
3.1.2	Serial number: _____		
3.1.3	Bore code: _____		
3.1.4	Rating: _____		
3.2	Check if the latch has enough clearance to pass the jaws.		
3.3	Check if latch Lock pin locks the Latch handle		
3.4	Open and close the elevator 5 times slowly and 5 times quickly check that the elevator works without hesitation or hampering.		

NATIONAL OILWELL VARCO

		Initials required	
		Operator	Cross checker
4	**After load test**		
4.1	Check there are no sharp corners, edges that can cause injury or weld spatter		
4.2	Check if elevator is load tested and MPI'd		
4.3	Check there's no corrosion on pins, springs and machined areas		
4.4	Check if bolt and nuts are lock wired correctly. (See fig 4)		
4.5	Check that grease nipples on door hinge boss, cam latch and cam latch lock are present and that they are greased.		
4.6	Open and close the elevator 5 times slowly and 5 times quickly check that the elevator works without hesitation or hampering.		
4.7	Check if al stamping has been applied according to drawing and router.		

5 REMARKS

_____

_____

_____

_____

NATIONAL OILWELL VARCO

TEST SPECIFICATION
SMX

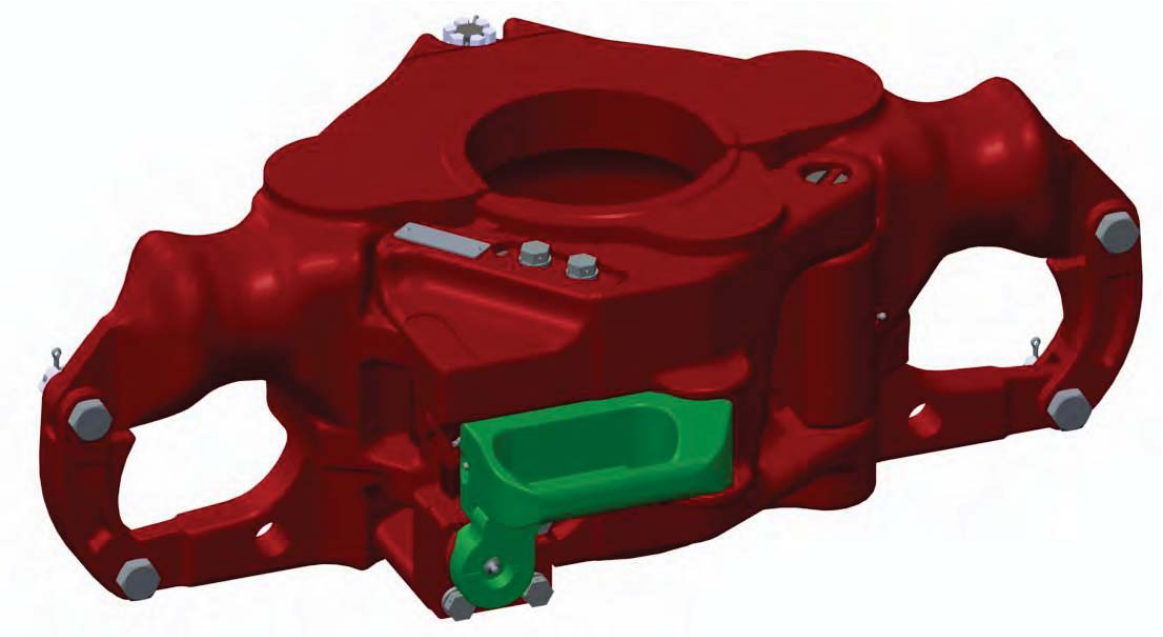

Part Description:	
Part Number:	
Serial No.:	
Shop/Work Order:	
Date:	

3rd Party (if applicable) (approval / review / witnessed items)	(name)	(signature)
Final Inspection	(name)	(signature)
NOV Picker (complete delivery warehouse)	(name)	(signature)

1 FINAL INSPECTIONS AND DATABOOK INFORMATION

Reference serial number:_____

Part numbering and traceability information

Description	Part number	Heat-code/ Serial number	Foundry/ Vendor
Body			
Door			
Cam latch/-lock kit SMX			
Cam latch			
Cam latch lock			
Shaft hinge-boss			
Cam latch shaft			
Cam latch lock shaft			

2 General inspection

		Initials required: Operator	Initials required: Cross checker
2.1	Check there are no sharp corners or edges on parts.		
2.2	Check there are no welding spatters.		
2.3	Check that the assembly has been load tested.		
2.4	Check that the assembly has been MPI tested.		
2.5	Check paint layer thickness according to specification. Measure and note down 3 positions randomly taken from the painted surfaces: Measurement 1. _____ Measurement 2. _____ Measurement 3._____		
2.6	Check all blank surfaces have preservation applied (picker).		
2.7	Check painted surfaces for no chipping and a gloss finish (picker).		
2.8	Check all greasing points are greased.		
2.9	Check all sliding surfaces have grease applied prior or after assembly.		
2.10	Check secondary retention rules have been applied as mentioned on the assembly drawing and secondary retention guide.		

		Initials required	
		Operator	Cross Checker
3	**Before load test**		
3.1	Check marking on presence, legibility and verify with shop order;		
3.1.1	Part number: _____		
3.1.2	Serial number: _____		
3.1.3	Bore code: _____		
3.1.4	Rating: _____		
3.2	Check that the top surface of the body hinge makes contact with the bottom side of the upper door hinge (Min 30% use .006" feeler gage, see fig 2)		
3.3	Check that the 'Door seat' makes contact with the 'Body seat' (Min 30% use .006" feeler gage, see fig 1)		
3.4	Check if elevator stays closed when it's wedged.		
3.5	Check if the cam latch lock doesn't move outwards when the elevator is wedged.		
3.6	Check if the contact between the latch cam and latch lock cam is as shown in drawing when the elevator is wedged. (See Fig 3)		
3.7	Check if the verification lock is working. (The verification lock must prevent the cam lock from being opened)		
3.8	Check if verification lock has max +/- 60% rotation. (If this is more adjust this with the castle nut)		
3.9	Check that when the cam latch and the cam latch lock are in open position (unlocked) it's impossible to move the verification lock back to horizontal position.		

3.10 Check if distance between Body and Door (top or bottom) is 1/8" (+/- .020") on latch side (see fig 5)

Note down the measured gap: _____

3.11 Check if lock stop block doesn't stick out more than 1/16" on side of door. (See fig 3)

3.12 Check if the radius from the cam latch cam latch is seated according to drawing. (See Fig 3)

3.13 Check if hinge-pin and cam latch/ lock pins have reducing cambers at bottom side.

3.14 Check if correct springs are fitted and cam latch en cam latch lock works without any hesitation.

3.15 Check if link blocks can rotate freely to a minimum horizontal position.

3.16 Check if head cap screw and nut (handle) at the back side of the elevator fit. (Grind to fit if needed)

3.17 Check if shackles at the lower ear fit. (Grind to fit if needed, 2x)

3.18 Pipe opening;

When the bore is 2 7/8" or smaller the pipe opening should be 1" more than the actual bore.

Note down the measurements; _____

When the bore is between 2.7/8" and 5.1/2" the pipe opening should be 1.1/2." more than the actual bore.

Note down the measurements: _____

When the bore is equal or bigger then 5.1/2" the pipe opening should be 2" more than the actual bore.

Note down the measurements: _____

3.19	Open and close the elevator 5 times slowly and 5 times quickly check that the elevator works without hesitation or hampering.	

4 After load test

		Initials required: Operator	Initials required: Cross checker
4.1	Check there are no sharp corners, edges that can cause injury or weld spatter		
4.2	Check if elevator is load tested and MPI'd		
4.3	Check there's no corrosion on pins, springs and machined areas		
4.4	Hinge pin lock bar is engaged both sides for at least 3/16"		
4.5	Check if head cap screw, nut and cotter pin at the back side of the elevator are present.		
4.6	Check if the verification lock is secured with a nut and cotter pin.		
4.7	Check if link blocks, bolts, nuts and cotter pins are present.		
4.8	Check if bolt and nuts are lock wired correctly. (See fig 4)		
4.9	Check if cam latch and cam latch lock pin on the upper side are correctly retained.		
4.10	Check that grease nipples on door hinge boss, cam latch and cam latch lock are present and that they are greased.		
4.11	Open and close the elevator 5 times slowly and 5 times quickly check that the elevator works without hesitation or hampering.		
4.12	Check if al stamping has been applied according to drawing and router.		

4.13 Measure bore:

Top bore
Note down the measurements; _____

Bottom bore
Note down the measurements; _____

4.14 Check dimensions ears with gauge

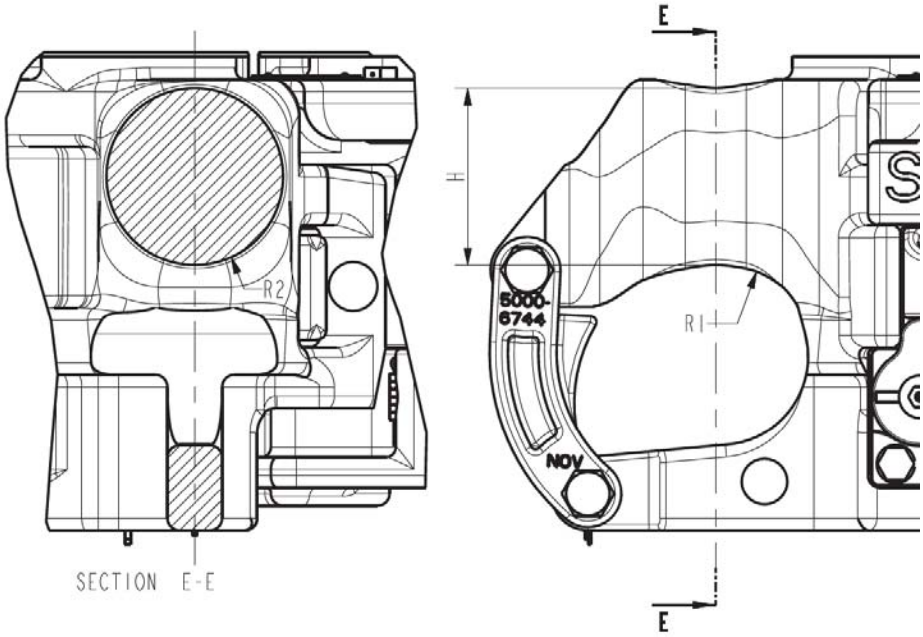

5 REMARKS

_____
_____
_____
_____

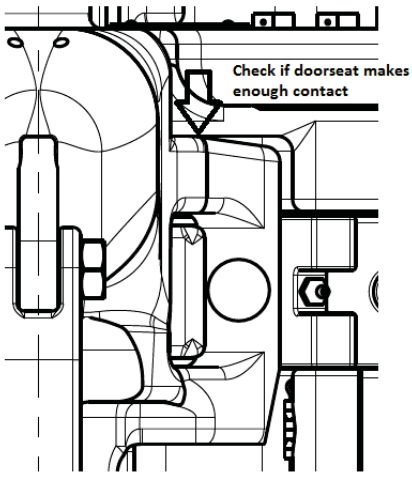

Figure 1

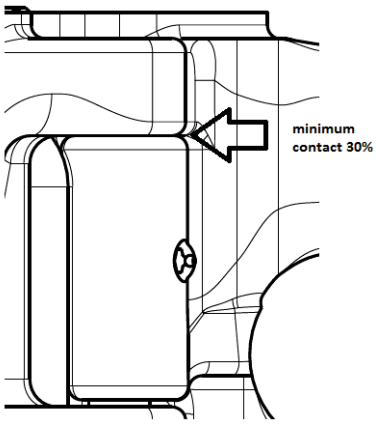

Figure 2

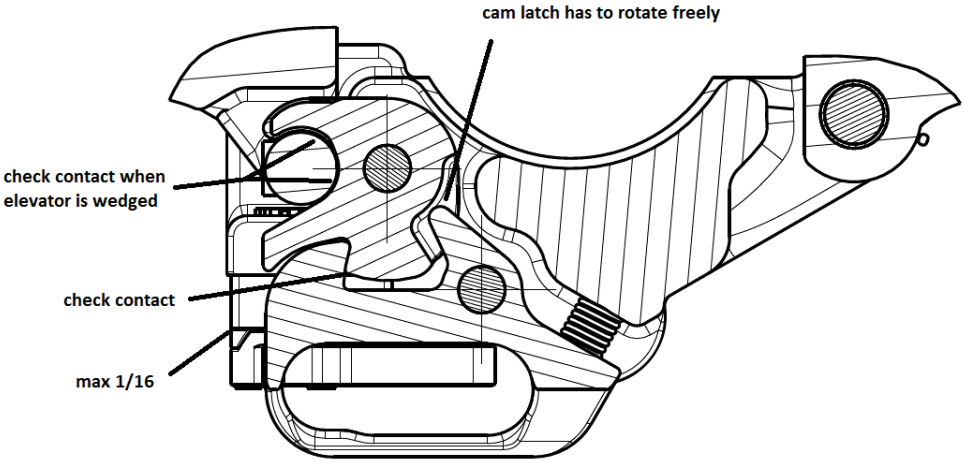

Figure 3

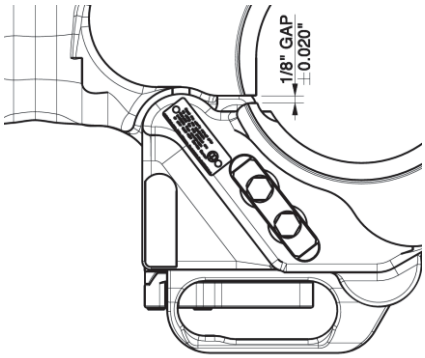

Figure 5

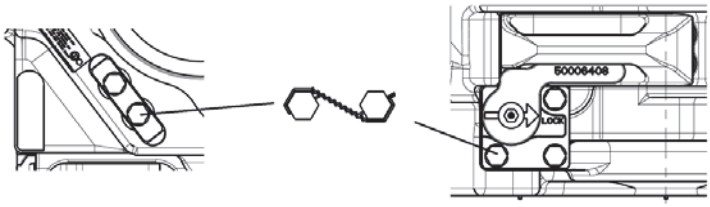

Figure 4

NATIONAL OILWELL VARCO

TEST SPECIFICATION
SX elevator

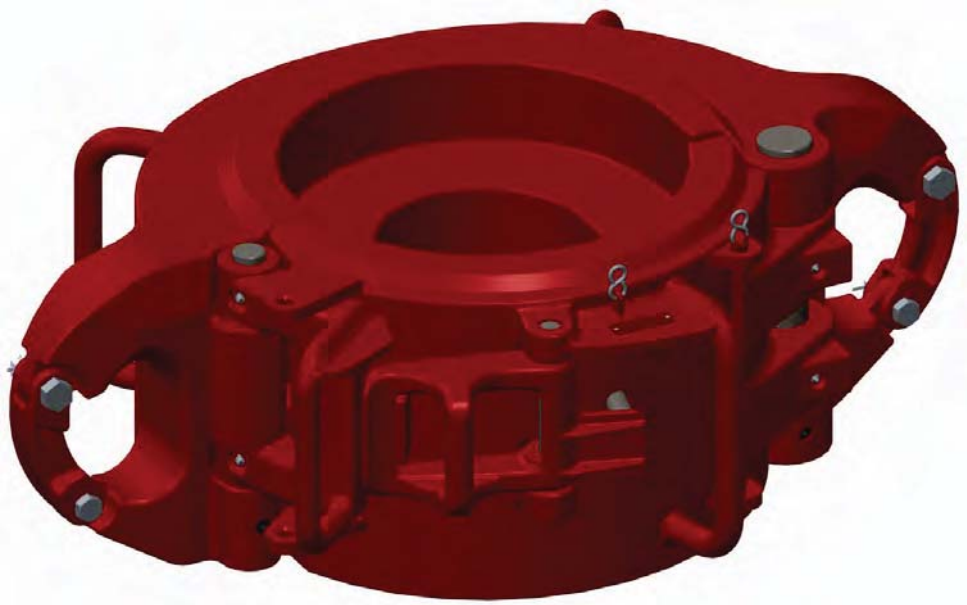

Part Description:	
Part Number:	
Serial No.:	
Shop/Work Order:	
Date:	

3rd Party (if applicable) (approval / review / witnessed items)	(name)	(signature)
Final Inspection	(name)	(signature)
NOV Picker (complete delivery warehouse)	(name)	(signature)

Page intentionally left blank for 2-sided printing purposes

NATIONAL OILWELL VARCO

WEDGE AND BORE MEASURING INSTRUCTION
“SX & SLX” ELEVATORS

ORIGINAL DOCUMENT		LATEST REVISION	
Name:	Fouad Lakhssim	Name	Fouad Lakhssim
Date:	05-09-2012	Date	25-Jun-2013
Drawing type:	Word document.	ECN	00011668

Varco BJ B.V. Nijverheidsweg 45 4879 AP Etten-Leur The Netherlands Tel: +31-76-5083000 Fax: +31-76-5046000	Revision:	Document No.:	Description:	Sheet:
	01	**10777146-PRO**	**Wedge and bore measuring instruction “SX & SLX” elevators**	**1 of 4**

Tooling Requirements:

- 3x wedge with angle 5°
- Hammer DIN1041 500GR
- Calibrated measuring tool.

Varco BJ B.V.
Nijverheidsweg 45
4879 AP Etten-Leur
The Netherlands
Tel: +31-76-5083000
Fax: +31-76-5046000

Revision:	Document No.:	Description:	Sheet:
01	10777146-PRO	Wedge and bore measuring instruction "SX & SLX" elevators	2 of 4

1. Hang, fully closed, elevator by its ears in a crane.

2. Wedge elevator at the hinge boss and check top surface of “body” and “door”. Machined top surfaces must be levelled.

3. Insert a wedge first into the gap between “body” and “door” at the top till it is just stuck. Then insert another wedge into the gap between “body” and “door” at the bottom till it is firm stuck.
   Subsequently wedge the 1st again till it is fixed in place.

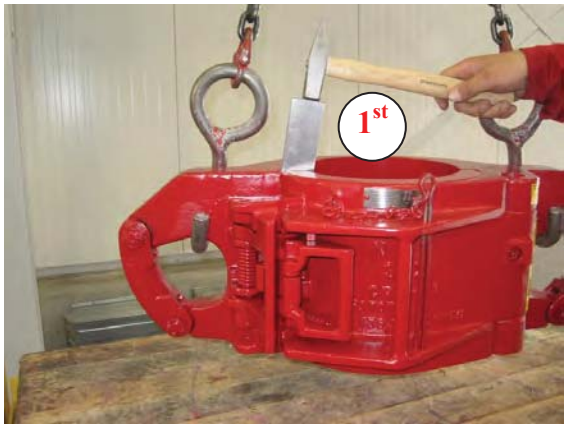

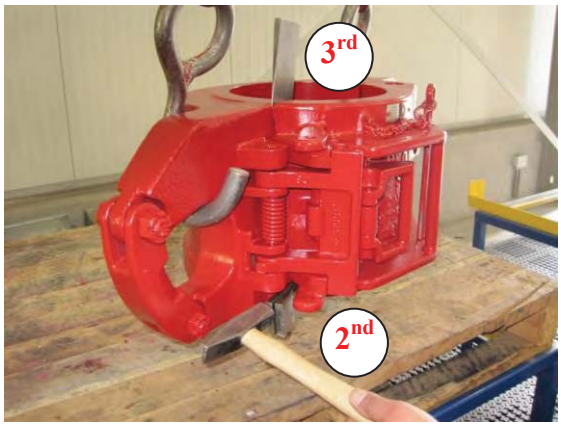

4. Use calibrated measuring tool to measure top en bottom bore as shown in picture 1.

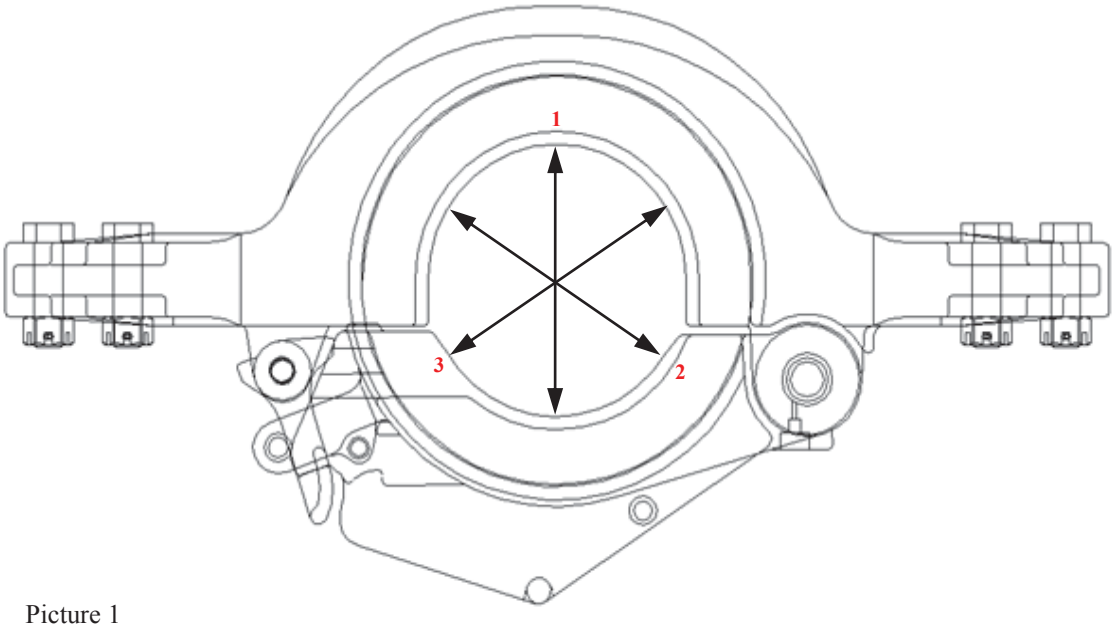

Picture 1

Varco BJ B.V.
Nijverheidsweg 45
4879 AP Etten-Leur
The Netherlands
Tel: +31-76-5083000
Fax: +31-76-5046000

Revision:	Document No.:	Description:	Sheet:
01	10777146-PRO	Wedge and bore measuring instruction “SX & SLX” elevators	4 of 4

NATIONAL OILWELL VARCO

WEDGE AND BORE MEASURING INSTRUCTION
“TMA & TA” ELEVATORS

ORIGINAL DOCUMENT		LATEST REVISION	
Name:	Fouad Lakhssim	Name	Fouad Lakhssim
Date:	05-09-2012	Date	20-06-2013
Drawing type:	Word document.	ECN	00011668

Varco BJ B.V. Nijverheidsweg 45 4879 AP Etten-Leur The Netherlands Tel: +31-76-5083000 Fax: +31-76-5046000	Revision:	Document No.:	Description:	Sheet:
	01	**10773477-PRO**	**Wedge and bore measuring instruction “TMA & TA” elevator**	**1 of 4**

NATIONAL OILWELL VARCO

Tooling Requirements:

- 3x wedge with angle 5°
- Hammer DIN1041 500GR
- Calibrated measuring tool.

Varco BJ B.V. Nijverheidsweg 45 4879 AP Etten-Leur The Netherlands Tel: +31-76-5083000 Fax: +31-76-5046000	Revision: **01**	Document No.: **10773477-PRO**	Description: **Wedge and bore measuring instruction "TMA & TA" elevator**	Sheet: **2 of 4**

1. Hang, fully closed, elevator by its ears in a crane.

2. Wedge elevator at the hinge boss and check top surface of “body” and “door”. Machined top surfaces must be levelled.

Varco BJ B.V. Nijverheidsweg 45 4879 AP Etten-Leur The Netherlands Tel: +31-76-5083000 Fax: +31-76-5046000	Revision: **01**	Document No.: **10773477-PRO**	Description: **Wedge and bore measuring instruction “TMA & TA” elevator**	Sheet: **3 of 4**

3. Insert a wedge first into the gap between “body” and “door” at the top till it is just stuck. Then insert another wedge into the gap between “body” and “door” at the bottom till it is firm stuck.
   Subsequently wedge the 1st again till it is fixed in place.

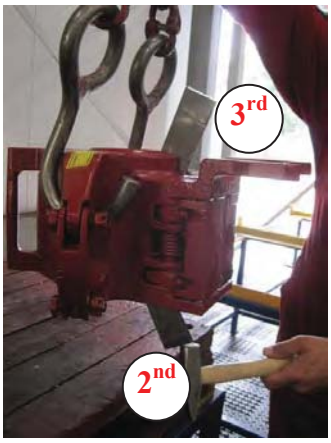

4. Use calibrated measuring tool to measure top en bottom bore as shown in picture 1.

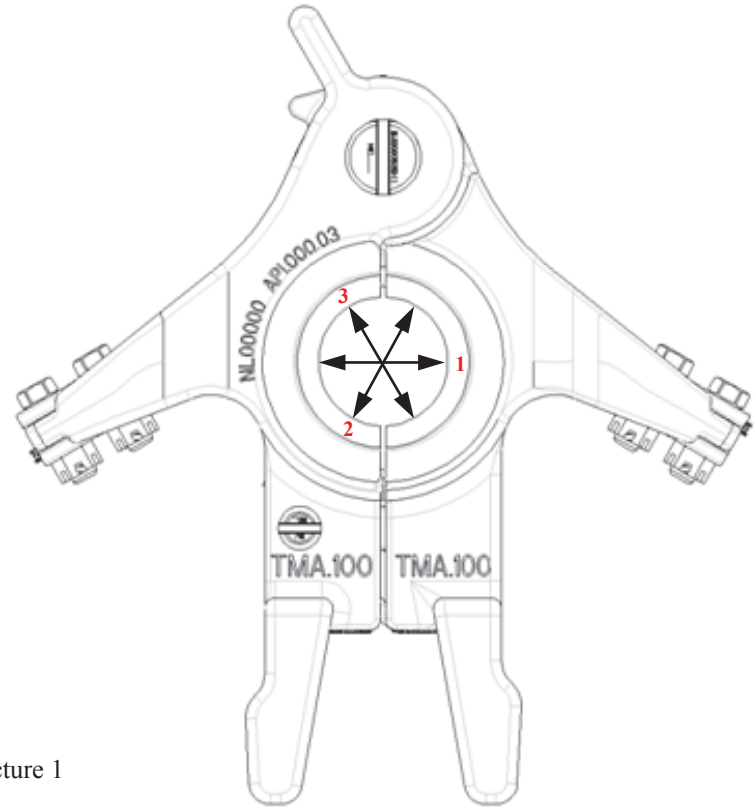

Picture 1

Varco BJ B.V. Nijverheidsweg 45 4879 AP Etten-Leur The Netherlands Tel: +31-76-5083000 Fax: +31-76-5046000	Revision: **01**	Document No.: **10773477-PRO**	Description: **Wedge and bore measuring instruction “TMA & TA” elevator**	Sheet: **4 of 4**

NATIONAL OILWELL VARCO

WEDGE AND BORE MEASURING INSTRUCTION "SJX" ELEVATOR

ORIGINAL DOCUMENT		LATEST REVISION	
Name:	Fouad Lakhssim	Name	Fouad Lakhssim
Date:	05-09-2012	Date	25-Jun-2013
Drawing type:	Word document.	ECN	00011668

Varco BJ B.V. Nijverheidsweg 45 4879 AP Etten-Leur The Netherlands Tel: +31-76-5083000 Fax: +31-76-5046000	Revision:	Document No.:	Description:	Sheet:
	01	**10777148-PRO**	**Wedge and bore measuring instruction "SJX" elevator**	**1 of 4**

NATIONAL OILWELL VARCO

Tooling Requirements:

- 2x wedge with angle 5°
- Hammer DIN1041 500GR
- Calibrated measuring tool.

Varco BJ B.V. Nijverheidsweg 45 4879 AP Etten-Leur The Netherlands Tel: +31-76-5083000 Fax: +31-76-5046000	Revision: **01**	Document No.: **10777148-PRO**	Description: **Wedge and bore measuring instruction "SJX" elevator**	Sheet: **2 of 4**

1. Hang, fully closed, elevator by its ears in a crane.

2. Insert a wedge first into the gap between “body” and “door” at the top of the hinge boss till it is fixed in place.
   Then insert another wedge at the other side into the gap between “body” and “door” at the bottom of the hinge boss till it is fixed in place.

3. Use calibrated measuring tool to measure top en bottom bore as shown in picture 1.

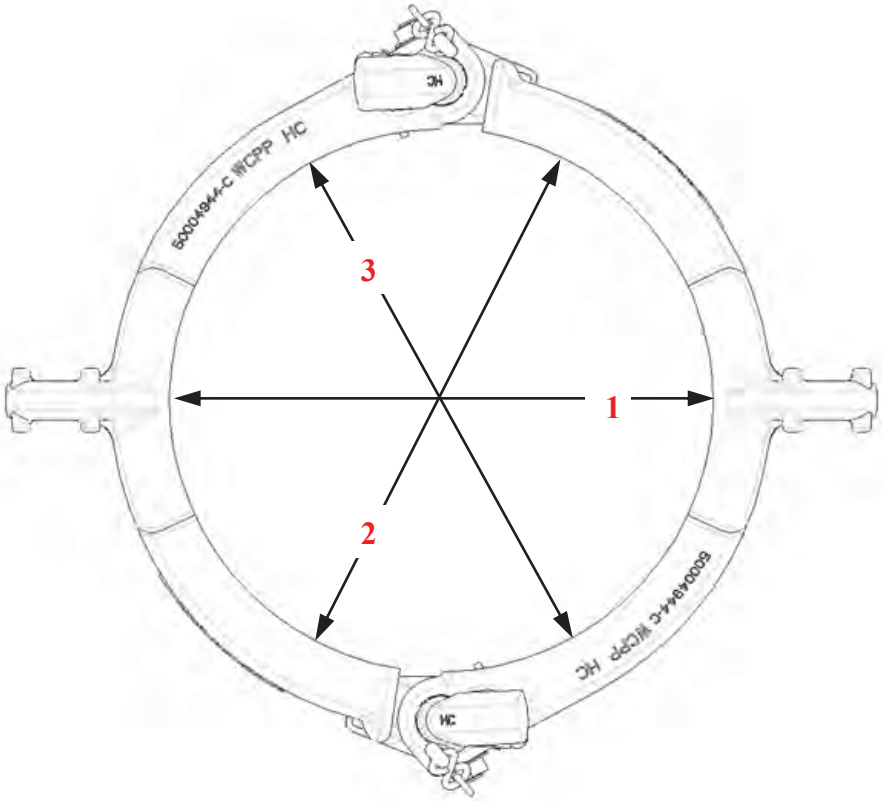

Picture 1

Varco BJ B.V. Nijverheidsweg 45 4879 AP Etten-Leur The Netherlands Tel: +31-76-5083000 Fax: +31-76-5046000	Revision: **01**	Document No.: **10777148-PRO**	Description: **Wedge and bore measuring instruction "SJX" elevator**	Sheet: **4 of 4**

NATIONAL OILWELL VARCO

WEDGE AND BORE MEASURING INSTRUCTION "SMX" ELEVATOR

ORIGINAL DOCUMENT		LATEST REVISION	
Name:	Fouad Lakhssim	Name	Fouad Lakhssim
Date:	13-Jun-2012	Date	25-Jun-2013
Drawing type:	Word document.	ECN	00011668

Varco BJ B.V.	Revision:	Document No.:	Description:	Sheet:
Nijverheidsweg 45 4879 AP Etten-Leur The Netherlands Tel: +31-76-5083000 Fax: +31-76-5046000	**01**	**10777142-PRO**	**Wedge and bore measuring instruction "SMX" elevator**	**1 of 4**

Tooling Requirements:

- 4x wedge with angle 5°
- Hammer DIN1041 500GR
- Calibrated measuring tool.

Varco BJ B.V. Nijverheidsweg 45 4879 AP Etten-Leur The Netherlands Tel: +31-76-5083000 Fax: +31-76-5046000	Revision: **01**	Document No.: **10777142-PRO**	Description: **Wedge and bore measuring instruction "SMX" elevator**	Sheet: **2 of 4**

1. Hang, fully closed, elevator by its ears in a crane.

2. Wedge elevator at the hinge boss and check top surface of “body” and “door”. Machined top surfaces must be levelled.

3. Insert a wedge first into the gap between “camlatch” and “body” till it is fixed in place. Then insert another wedge into the gap between “body” and “door at the top till it is just stuck.
   Subsequently insert another wedge into the gap between “body” and “door at the bottom till it is just stuck.

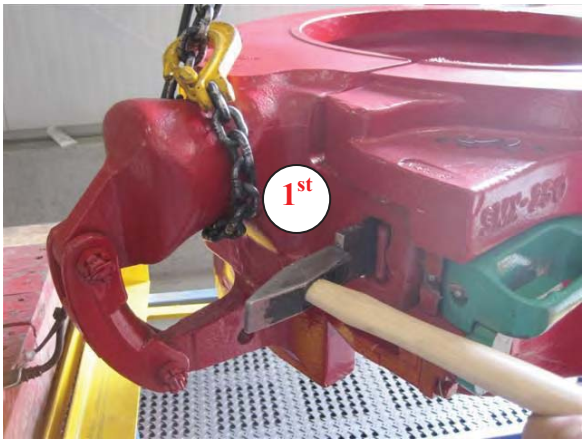

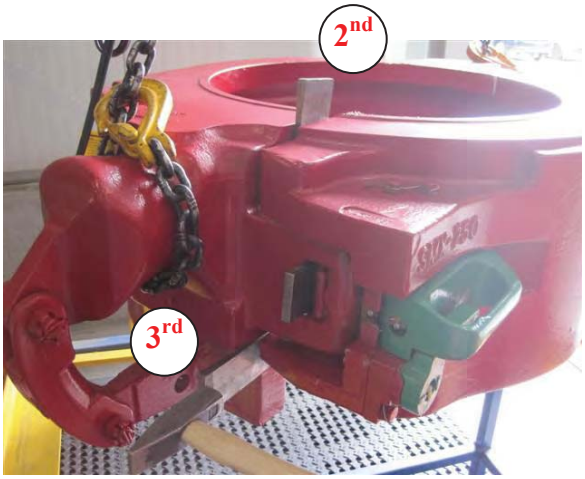

4. Use calibrated measuring tool to measure top en bottom bore as shown in picture 1.

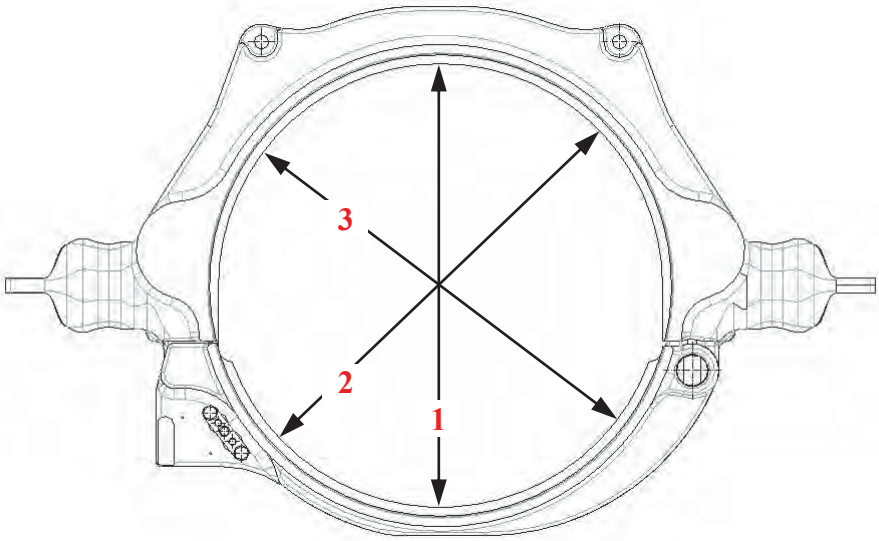

Picture 1

NATIONAL OILWELL VARCO

WEDGE AND BORE MEASURING INSTRUCTION
“G” ELEVATOR

ORIGINAL DOCUMENT		LATEST REVISION	
Name:	Fouad Lakhssim	Name	Fouad Lakhssim
Date:	13-Jun-2012	Date	25-Jun-2013
Drawing type:	Word document.	ECN	00011668

Varco BJ B.V.	Revision:	Document No.:	Description:	Sheet:
Nijverheidsweg 45 4879 AP Etten-Leur The Netherlands Tel: +31-76-5083000 Fax: +31-76-5046000	**01**	**10777152-PRO**	**Wedge and bore measuring instruction “G” elevator**	**1 of 4**

Tooling Requirements:

- 3x wedge with angle 5°
- Hammer DIN1041 500GR
- Calibrated measuring tool.

Varco BJ B.V. Nijverheidsweg 45 4879 AP Etten-Leur The Netherlands Tel: +31-76-5083000 Fax: +31-76-5046000	Revision: **01**	Document No.: **10777152-PRO**	Description: **Wedge and bore measuring instruction "G" elevator**	Sheet: **2 of 4**

1. Hang, fully closed, elevator by its ears in a crane.

2. Wedge elevator at the hinge boss and check top surface of “body” and “door”. Machined top surfaces must be levelled.

3. Insert a wedge first into the gap between “body” and “door” at the top till it is just stuck. Then insert another wedge into the gap between “body” and “door” at the bottom till it is firm stuck.
   Subsequently wedge the 1st again till it is fixed in place.

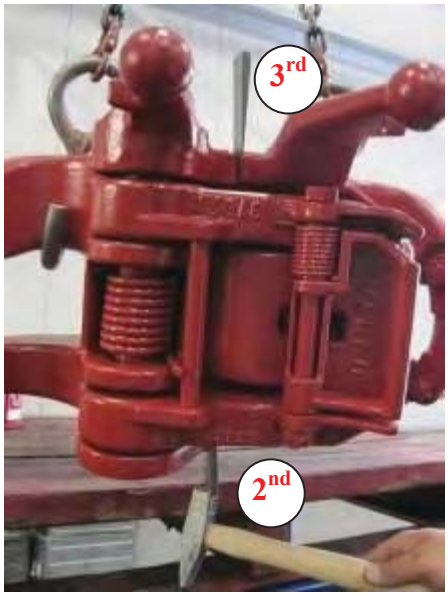

4. Use calibrated measuring tool to measure top en bottom bore as shown in picture 1 & 2.

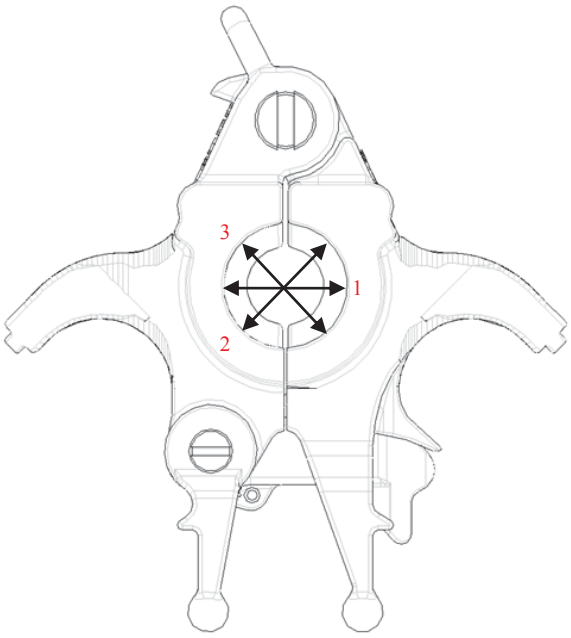

PICTURE 1

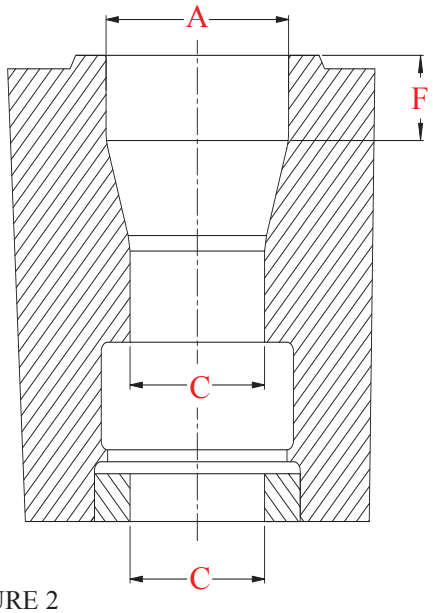

PICTURE 2

Varco BJ B.V. Nijverheidsweg 45 4879 AP Etten-Leur The Netherlands Tel: +31-76-5083000 Fax: +31-76-5046000	Revision: **01**	Document No.: **10777152-PRO**	Description: **Wedge and bore measuring instruction “G” elevator**	Sheet: **4 of 4**

NATIONAL OILWELL VARCO

WEDGE AND BORE MEASURING INSTRUCTION "SJL" ELEVATORS

ORIGINAL DOCUMENT		LATEST REVISION	
Name:	Fouad Lakhssim	Name	Fouad Lakhssim
Date:	05-09-2012	Date	05-09-2012
Drawing type:	Word document.	ECR	EL-0705370

Varco BJ B.V. Nijverheidsweg 45 4879 AP Etten-Leur The Netherlands Tel: +31-76-5083000 Fax: +31-76-5046000	Revision: **01**	Document No.: **10695825-PRO**	Description: **Wedge and bore measuring instruction "SJL" elevator**	Sheet: **1 of 4**

Tooling Requirements:

- 3x wedge with angle 5°
- Hammer DIN1041 500GR
- Calibrated measuring tool.

Varco BJ B.V. Nijverheidsweg 45 4879 AP Etten-Leur The Netherlands Tel: +31-76-5083000 Fax: +31-76-5046000	Revision: **01**	Document No.: **10695825-PRO**	Description: **Wedge and bore measuring instruction "SJL" elevator**	Sheet: **2 of 4**

1. Hang, fully closed, elevator by its ears in a crane.

2. Wedge elevator at the hinge boss and check top surface of “body” and “door”. Machined top surfaces must be levelled.

3. Insert a wedge first into the gap between “body” and “door” at the top till it is just stuck. Then insert another wedge into the gap between “body” and “door” at the bottom till it is firm stuck.
   Subsequently wedge the 1st again till it is fixed in place.

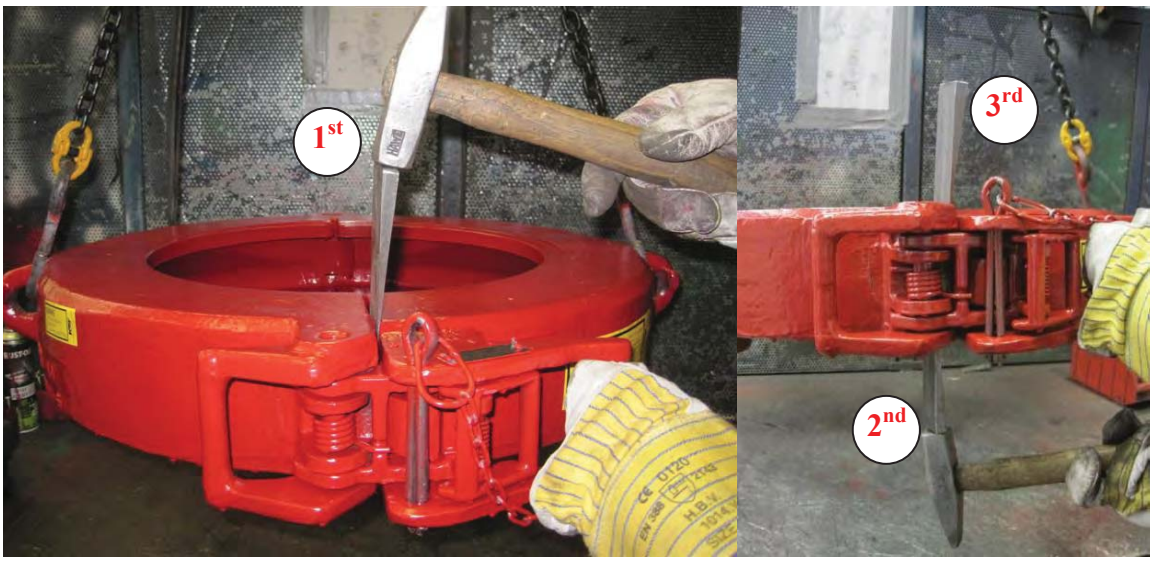

4. Use calibrated measuring tool to measure top en bottom bore as shown in picture 1.

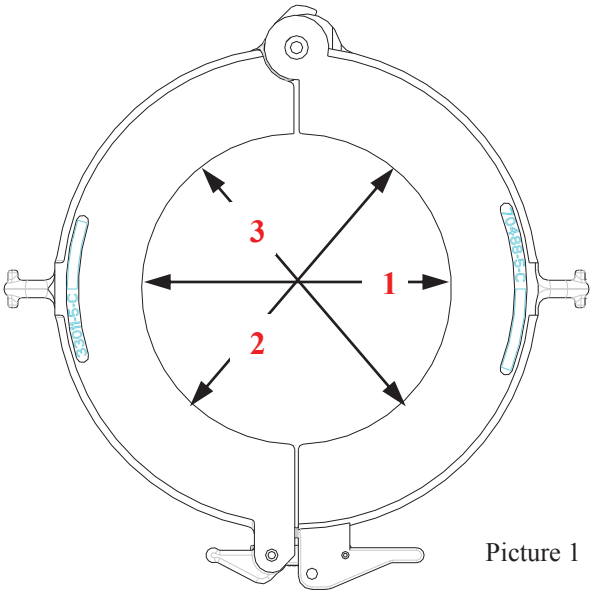

Picture 1

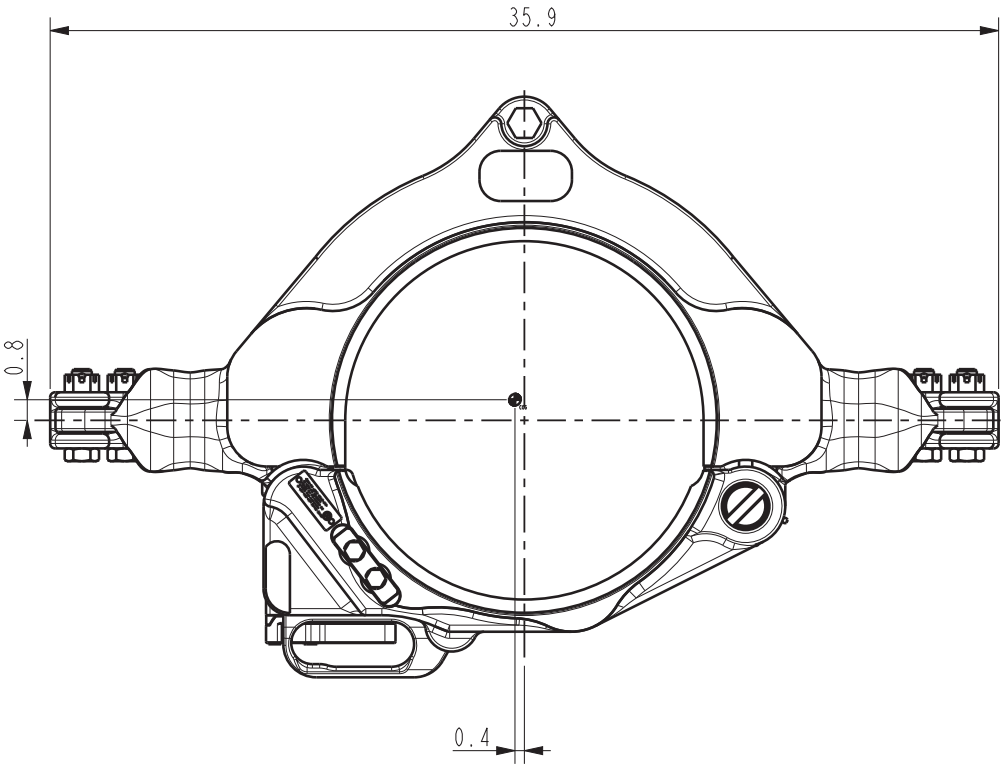

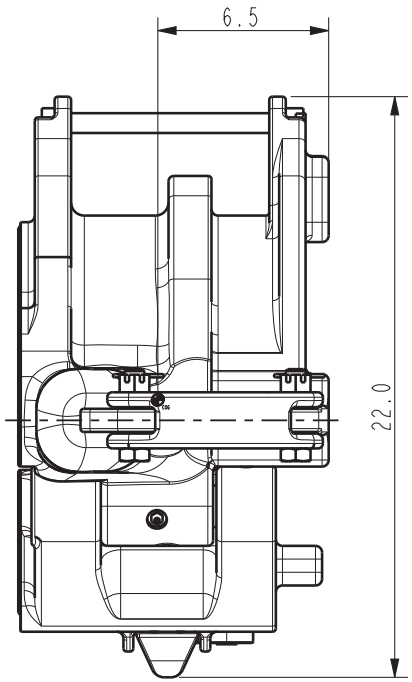

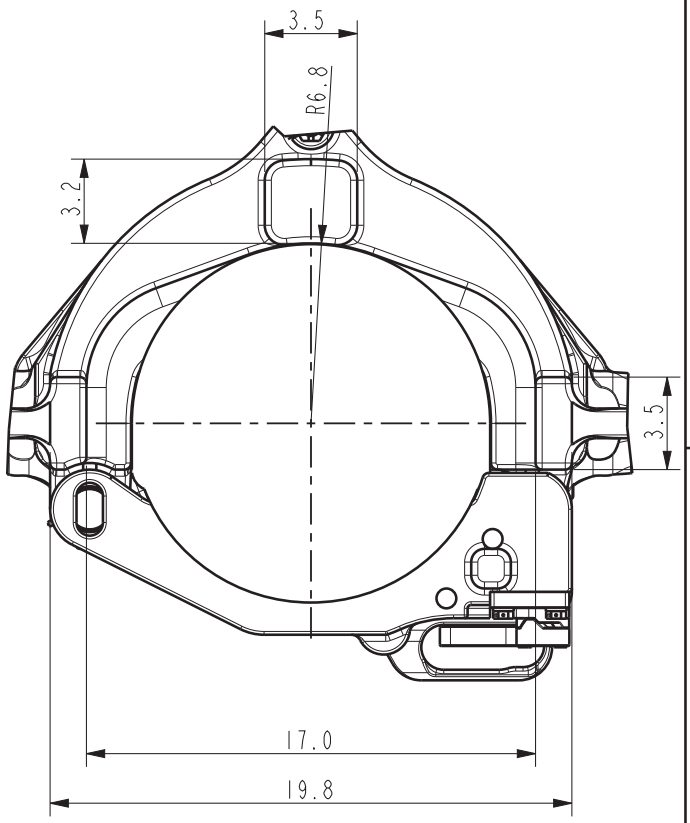

BOTTOM SUPPORT SURFACES

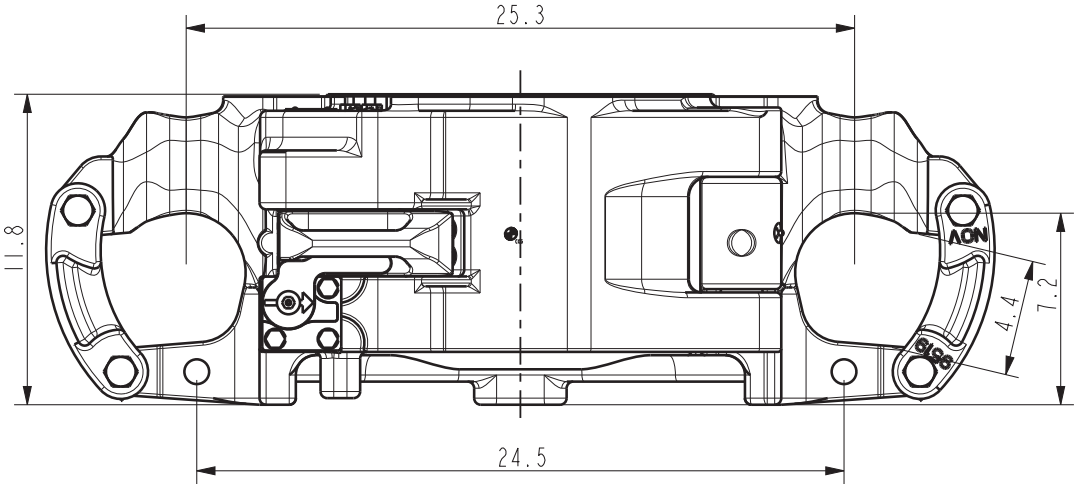

A

ORACLE PARTNUMBER	10143624		
LEGACY PARTNUMBER	50006454	REFERENCE ONLY	
MATERIAL			
SURF. FINISH / PAINTSPEC.	-	COLOR	-
WEIGHT	438.9 Lbs	199.1 kg	
CREATED BY	Temporarily Administrator	REVISION	
CREATED ON	05-Oct-15 12:08:27 PM		
REVISED BY	Mike Daerden		
REVISED ON	05-Oct-15 12:23:51 PM		
TC - ECR	00044520	GAD	A

UNLESS OTHERWISE SPECIFIED

TOLERANCES (PER ANSI Y 14.5)
3 PLACE DECIMAL .XXX ± .010
2 PLACE DECIMAL .XX ± .03
1 PLACE DECIMAL .X ± .1
ANGLES ± .5 DEGREE

BREAK SHARP CORNERS
.010 ± .005

MACHINED SURFACES 250

TORCHCUT SURFACES 1000

ALL WELD SYMBOLS ACC. TO ISO

ALL WELD DIMENSIONS ARE Z DIM'S

DO NOT SCALE DOCUMENT

THIS DOCUMENT IS NOV TEAMCENTER CONTROLLED

NATIONAL OILWELL VARCO

SCALE 1:5

PROJ.

UNITS INCH (mm)

TITLE: DIMENSIONAL DRAWING SMX 9.1/8"-13.3/8" 150STON

SIZE: B

DRAWING NO.: DD-50006454

SHEET 1 OF 1

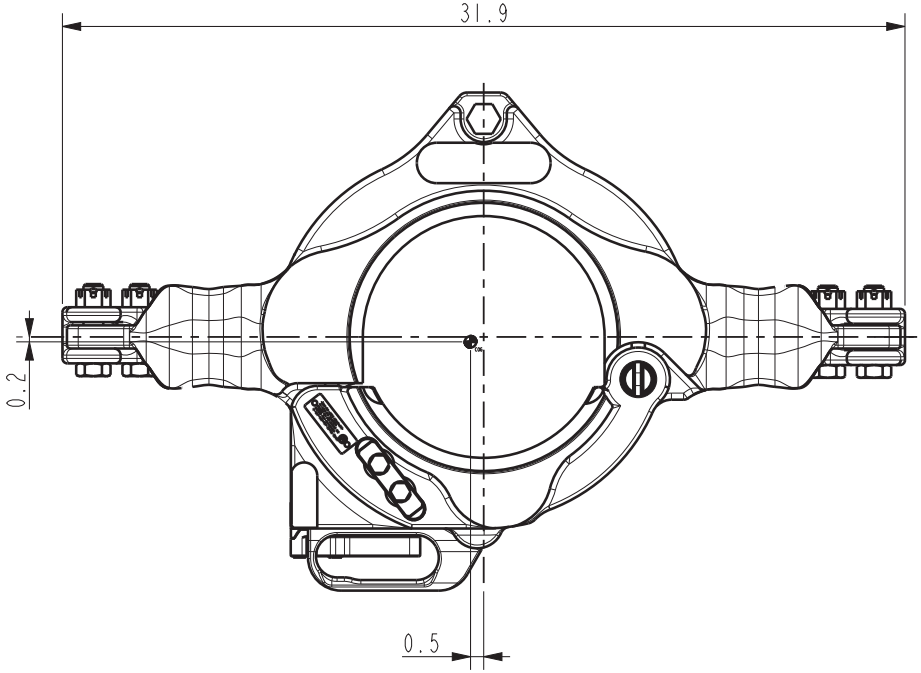

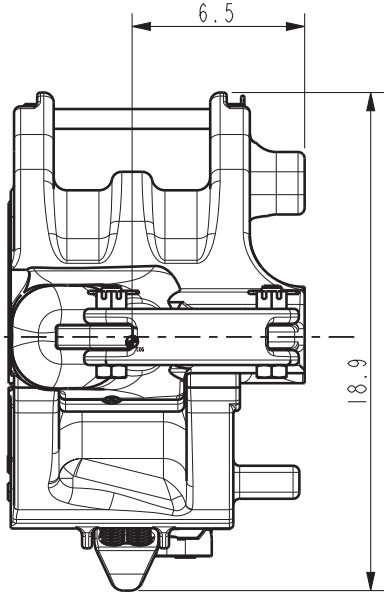

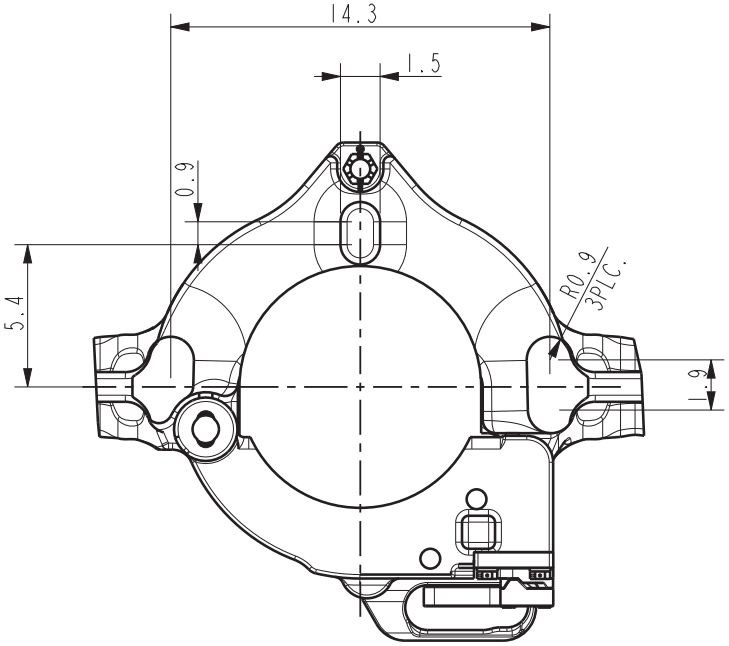

BOTTOM SUPPORT SURFACES

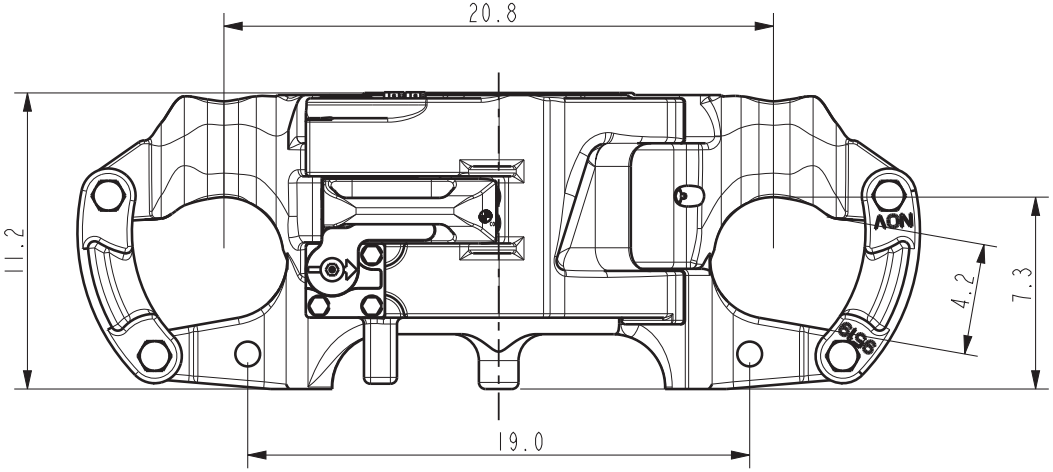

A

ORACLE PARTNUMBER	10034495		
LEGACY PARTNUMBER	50006438	REFERENCE ONLY	
MATERIAL	-		
SURF. FINISH / PAINTSPEC.	-	COLOR	-
WEIGHT	336.0 Lbs	152.4 kg	
CREATED BY	Temporarily Administrator	REVISION	
CREATED ON	05-Oct-15 11:29:27 AM		
REVISED BY	Mike Daerden		
REVISED ON	05-Oct-15 11:57:49 AM		
TC - ECR	00044520	GAD	A

UNLESS OTHERWISE SPECIFIED

TOLERANCES (PER ANSI Y 14.5)
3 PLACE DECIMAL .XXX ± .010
2 PLACE DECIMAL .XX ± .03
1 PLACE DECIMAL .X ± .1
ANGLES ± .5 DEGREE

BREAK SHARP CORNERS
.010 ± .005

MACHINED SURFACES 250

TORCHCUT SURFACES 1000

ALL WELD SYMBOLS ACC. TO ISO

ALL WELD DIMENSIONS ARE Z DIM'S

DO NOT SCALE DOCUMENT

THIS DOCUMENT IS NOV TEAMCENTER CONTROLLED

NATIONAL OILWELL VARCO

SCALE 1:5

PROJ.

UNITS INCH (mm)

TITLE
DIMENSIONAL DRAWING SMX 6"-9" 150STON

SIZE B

DRAWING NO. DD-50006438

SHEET 1 OF 1

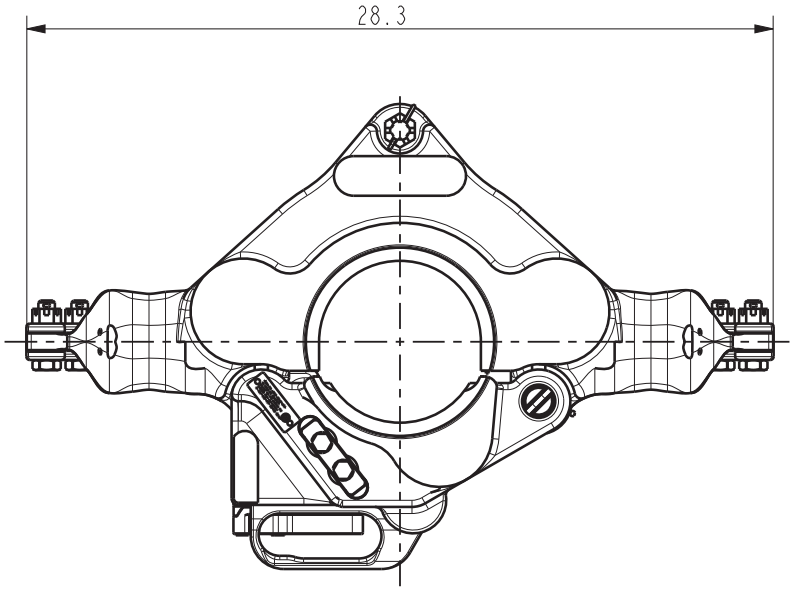

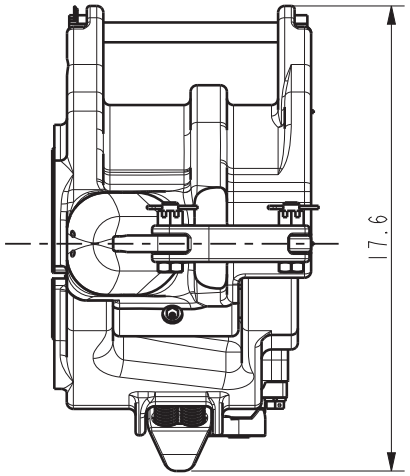

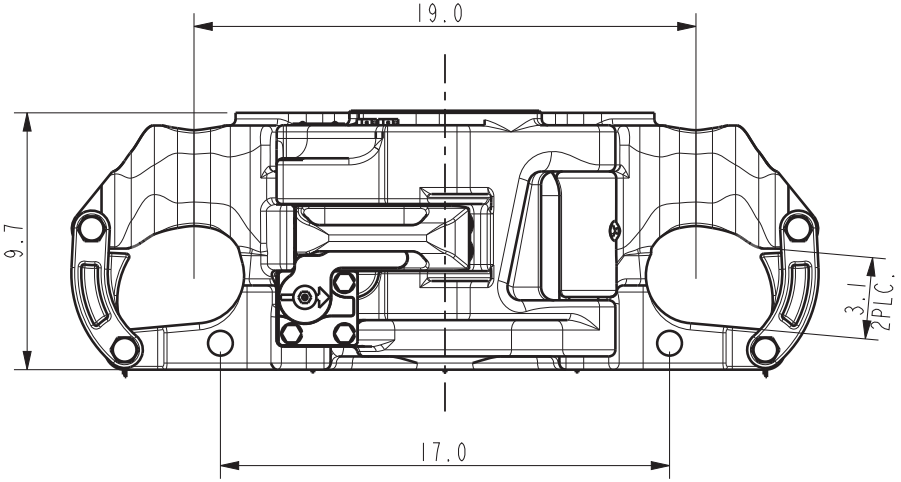

D

ORACLE PARTNUMBER	10143542		
LEGACY PARTNUMBER	50006430	REFERENCE ONLY	
MATERIAL			
SURF. FINISH / PAINTSPEC.	-	COLOR	-
WEIGHT	285.0 Lbs	129.3 kg	
CREATED BY	Temporarily Administrator	REVISION	
CREATED ON	05-Oct-15 10:48:07 AM		
REVISED BY	Mike Daerden		
REVISED ON	05-Oct-15 11:03:59 AM		
TC - ECR	00044520	DD	D

UNLESS OTHERWISE SPECIFIED

TOLERANCES (PER ANSI Y 14.5)
3 PLACE DECIMAL .XXX ± .010
2 PLACE DECIMAL .XX ± .03
1 PLACE DECIMAL .X ± .1
ANGLES ± .5 DEGREE

BREAK SHARP CORNERS
.010 ± .005

MACHINED SURFACES 250

TORCHCUT SURFACES 1000

ALL WELD SYMBOLS ACC. TO ISO

ALL WELD DIMENSIONS ARE Z DIM'S

DO NOT SCALE DOCUMENT

THIS DOCUMENT IS NOV TEAMCENTER CONTROLLED

NATIONAL OILWELL VARCO

SCALE 1:5

PROJ.

UNITS INCH (mm)

TITLE
DIMENSIONAL DRAWING SMX 3.1/2"-5.3/4" 150STON

SIZE B

DRAWING NO. DD-50006430

SHEET 1 OF 1

ITEM	QTY	PART NUMBER	DESCRIPTION
1	1	10713348	DSJX ASSEMBLY 6 1/4" - 8 7/8"
2	1	101151190-001	2-WAY LIFTING SLING, SWL 12 Sh.T.

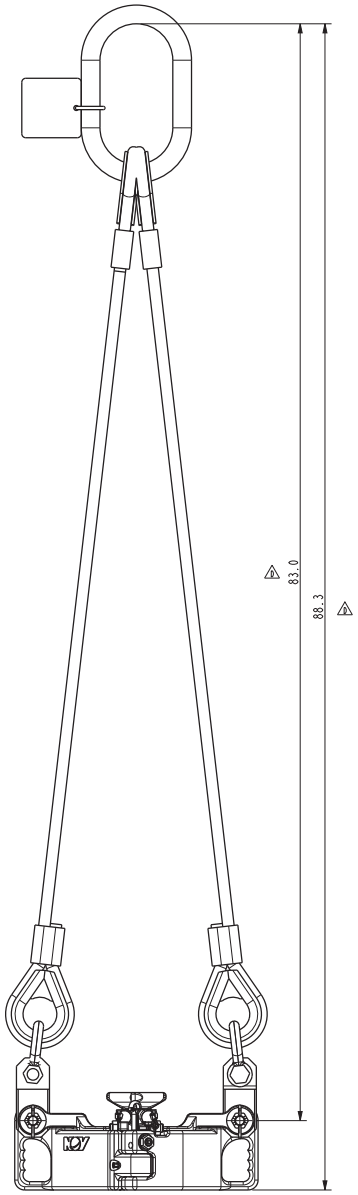

SCALE 1:5

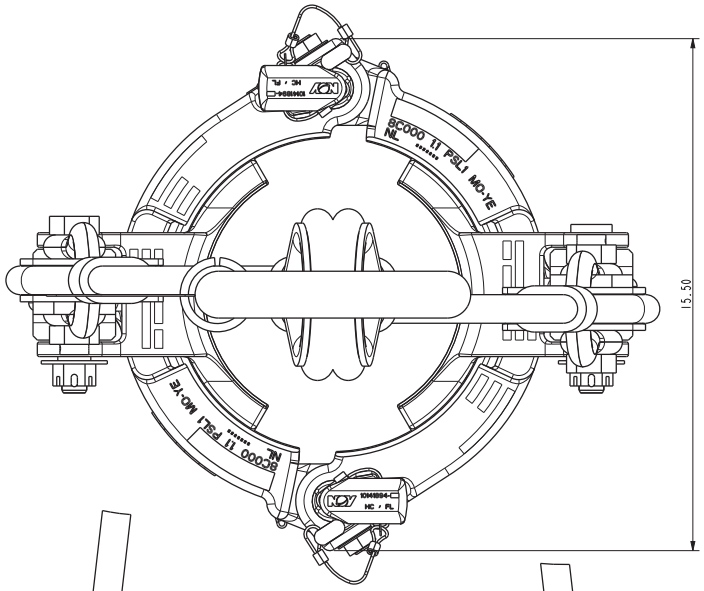

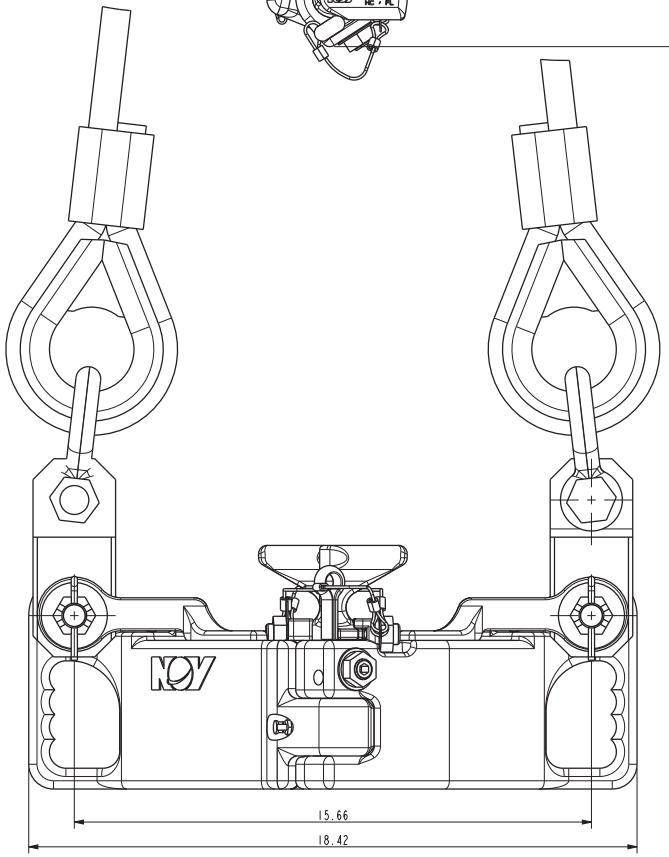

RATING = 12 sTon / 10.9 Tonne

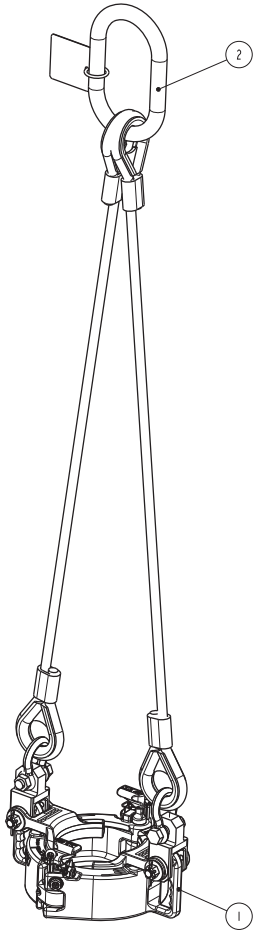

SCALE 1:6

△1 = PICTORIAL UPDATE

ORACLE PARTNUMBER	N/A		
LEGACY PARTNUMBER	N/A	REFERENCE ONLY	
MATERIAL	-		
SURF. FINISH / PAINTSPEC.	-	COLOR	-
WEIGHT	149.5 Lbs	67.8 kg	
CREATED BY	Niels Uitdehaag	REVISION	D
CREATED ON	26-Aug-11 12:09:31 PM		
REVISED BY	Bjorn Buijnsters		
REVISED ON	24-Jul-14 07:02:21 AM		
TC - ECR	00024546	ASM	

UNLESS OTHERWISE SPECIFIED
TOLERANCES (PER ANSI Y 14.5)
3 PLACE DECIMAL .XXX ± .010
2 PLACE DECIMAL .XX ± .03
1 PLACE DECIMAL .X ± .1
ANGLES ± .5 DEGREE
BREAK SHARP CORNERS .010 ± .005
MACHINED SURFACES 125
TORCHCUT SURFACES 1000
ALL WELD SYMBOLS ACC. TO ISO
ALL WELD DIMENSIONS ARE 2 DIM'S

DO NOT SCALE DOCUMENT

THIS DOCUMENT IS NOV TEAMCENTER CONTROLLED

NATIONAL OILWELL VARCO

SCALE 1:2 | PROJ.

UNITS INCH (mm)

TITLE	SIZE	DRAWING NO.	SHEET
D.D. DSJX 6.1/4"-8.7/8"	D	DD-50004958	1 OF 1

ITEM	QTY	PART NUMBER	DESCRIPTION
1	1	10713146	DSJX ASSEMBLY 3 25/32" - 6 1/8"
2	1	101151190-001	2-WAY LIFTING SLING, SWL 12 Sh.T.

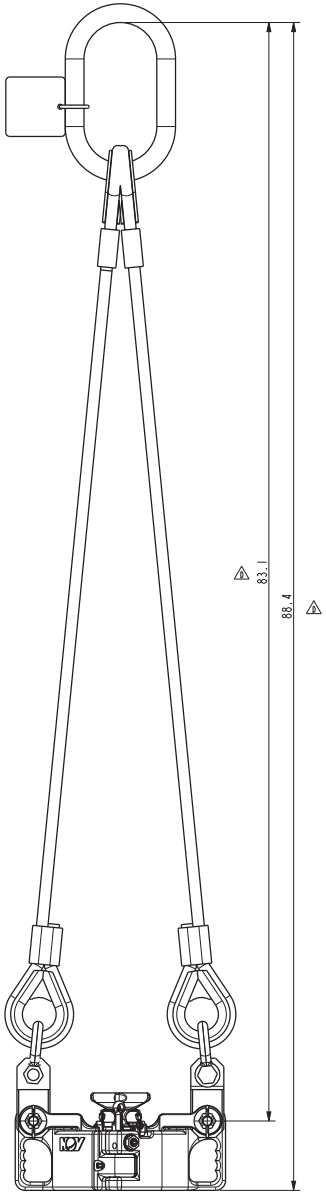

SCALE 1:5

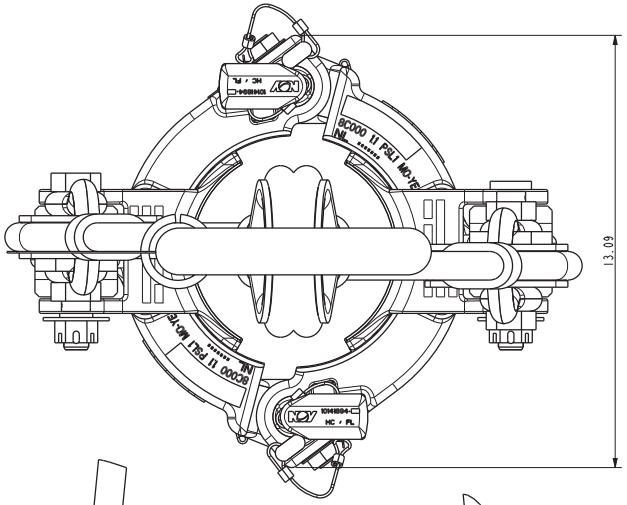

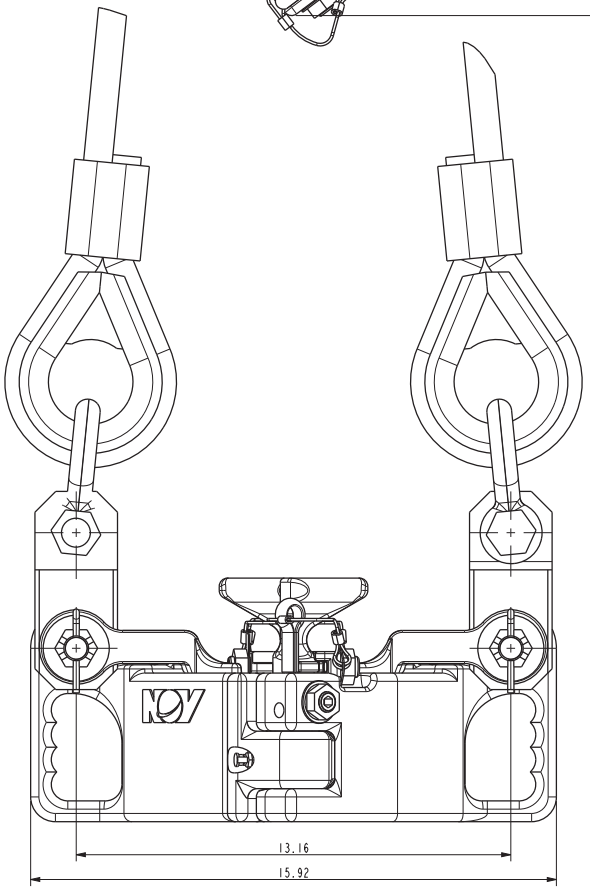

RATING = 12 sTon / 10.9 Tonne

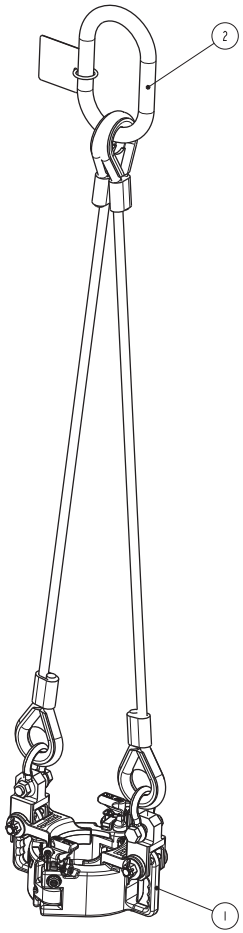

SCALE 1:6

△ = PICTORIAL UPDATE

ORACLE PARTNUMBER	N/A		
LEGACY PARTNUMBER	N/A	REFERENCE ONLY	
MATERIAL	-		
SURF. FINISH / PAINTSPEC.	-	COLOR	-
WEIGHT	136.7 Lbs	62.0 kg	
CREATED BY	Niels Uitdehaag	REVISION	
CREATED ON	26-Aug-11 10:57:48 AM		
REVISED BY	Bjorn Buijnsters		
REVISED ON	24-Jul-14 06:26:42 AM		
TC - ECR	00024546	ASM	

UNLESS OTHERWISE SPECIFIED
TOLERANCES (PER ANSI Y 14.5)
3 PLACE DECIMAL .XXX ± .010
2 PLACE DECIMAL .XX ± .03
1 PLACE DECIMAL .X ± .1
ANGLES ± .5 DEGREE
BREAK SHARP CORNERS .010 ± .005
MACHINED SURFACES 125
TORCHCUT SURFACES 1000
ALL WELD SYMBOLS ACC. TO ISO
ALL WELD DIMENSIONS ARE 2 DIM'S

DO NOT SCALE DOCUMENT

THIS DOCUMENT IS NOV TEAMCENTER CONTROLLED

NATIONAL OILWELL VARCO

SCALE 1:2

PROJ.

UNITS INCH (mm)

TITLE	SIZE	DRAWING NO.	SHEET
D.D. DSJX 3.25/32"-6.1/8"	D	DD-50004955	1 OF 1

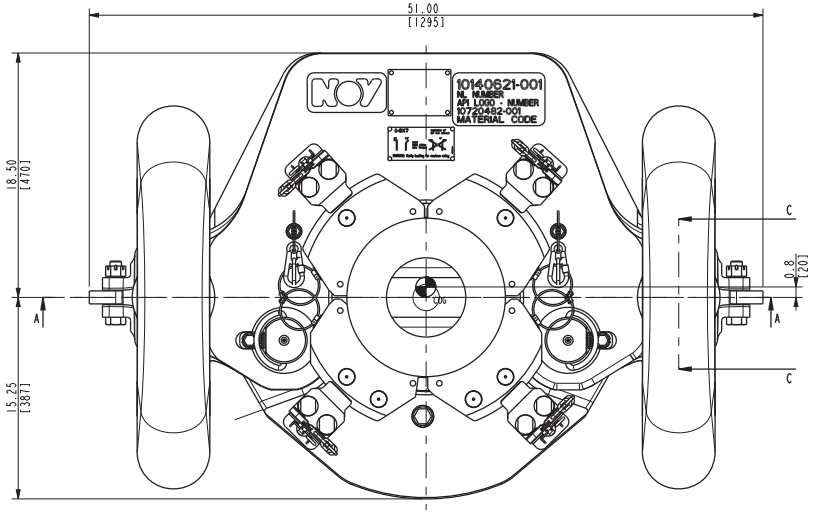

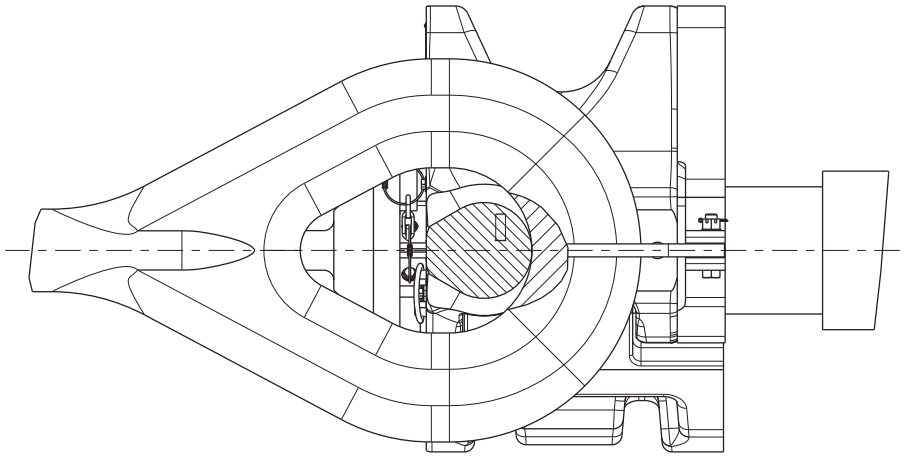

SECTION C-C

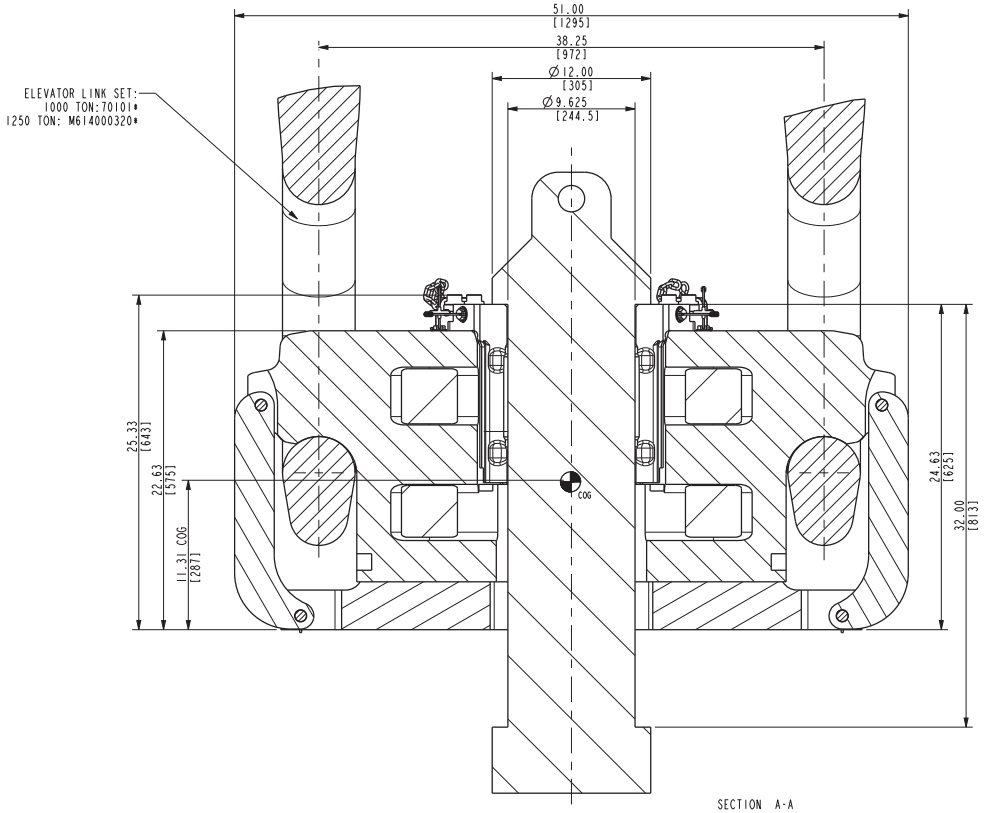

SECTION A-A

	PART NUMBER	LEGACY PART NUMBER	DESCRIPTION
1	10140621-001	50001270Y	ASS'Y SBX7, 1250 STON

WEIGHT SBX7 WITHOUT BUSHING 4,245 Lbs / 1,925 Kg [1]
WEIGHT 9.5/8" RISER BUSHING SET: 331 Lbs / 150 Kg [1]

ORACLE PARTNUMBER	SEE TABLE		
LEGACY PARTNUMBER	SEE TABLE	REFERENCE ONLY	
MATERIAL			
SURF. FINISH / PAINTSPEC.	-	COLOR	-
WEIGHT	10963.8 Lbs	4973.1 kg	
CREATED BY	Sonneveld, Leon	REVISION	
CREATED ON	01-Oct-13 09:05:58 AM		
REVISED BY	Sonneveld, Leon	A	
REVISED ON	01-Oct-13 10:28:07 AM		
TC - ECR	00017472	GAD	

UNLESS OTHERWISE SPECIFIED
TOLERANCES (PER ANSI Y 14.5)
3 PLACE DECIMAL .XXX ± .010
2 PLACE DECIMAL .XX ± .03
1 PLACE DECIMAL .X ± .1
ANGLES ± .5 DEGREE
BREAK SHARP CORNERS .010 ± .005
MACHINED SURFACES 125
TORCHCUT SURFACES 1000
ALL WELD SYMBOLS ACC. TO ISO
ALL WELD DIMENSIONS ARE 2 DIM'S

DO NOT SCALE DOCUMENT
THIS DOCUMENT IS NOV TEAMCENTER CONTROLLED

NATIONAL OILWELL VARCO

SCALE 1:5
UNITS INCH (mm)
PROJ.

TITLE	SIZE	DRAWING NO.	SHEET
DD SBX7 1250 WITH 9.5/8" RISER	D	DD-50001270-1	1 OF 1

WARNING

THE INSPECTION CRITERIA AND MAXIMUM WEAR ALLOWANCES CONTAINED IN THIS (THESE) DOCUMENT(S) ARE ONLY VALID WHEN THE RELATED EQUIPMENT IS IN OTHERWISE GOOD CONDITION, HAS NOT BEEN MISUSED, AND DOES NOT HAVE EXCESSIVE WEAR, CRACKS OR OTHER DEFECTS, OR PREVIOUS WELD REPAIR THESE INSPECTION CRITERIA AND MAXIMUM WEAR ALLOWANCES APPLY ONLY TO CERTAIN CRITICAL COMPONENTS AND, AS SUCH, CANNOT ON THEIR OWN DETERMINE THE OVERALL CONDITION OF THE EQUIPMENT AND ITS SUITABILITY FOR CONTINUED USE

ORIGINAL

PART NO	QTY	NEXT ASS'Y	FINAL ASS'Y

Varco BJ OIL TOOLS
ETTEN-LEUR, THE NETHERLANDS

UNLESS OTHERWISE SPECIFIED
TOLERANCES (PER ANSI Y 14.5)
3 PLACE DECIMAL XXX ± .010
2 PLACE DECIMAL XX ± .03
1 PLACE DECIMAL X ± 1
ANGELS ± 5 DEGREE
BREAK SHARP CORNERS .010 ± .005
MACHINED SURFACES 250

	NAME	DATE
PREPARED	H.v.R.	10 15-92
CHECKED		2 25 93
APPROVED		2 Mar 93

PROJ
SCALE NONE
UNITS INCH (MM)
MATERIAL
WEIGHT - LBS/ KG

REV.	E.C.N.	NAME	DATE	CHECKED
M				
L				
K				
J				
H				
G				
F				
E				
D				
C				
B				
A	11103	H.v.R.	2 5 '93	

ACAD FILE NO WDB000 DWG

TITLE WEAR DATA
GENERAL WARNING

SIZE B
DRAWING NO. WD-000
SHEET 1 OF 1

REDRAWN / REPLACED BY:
REPLACES

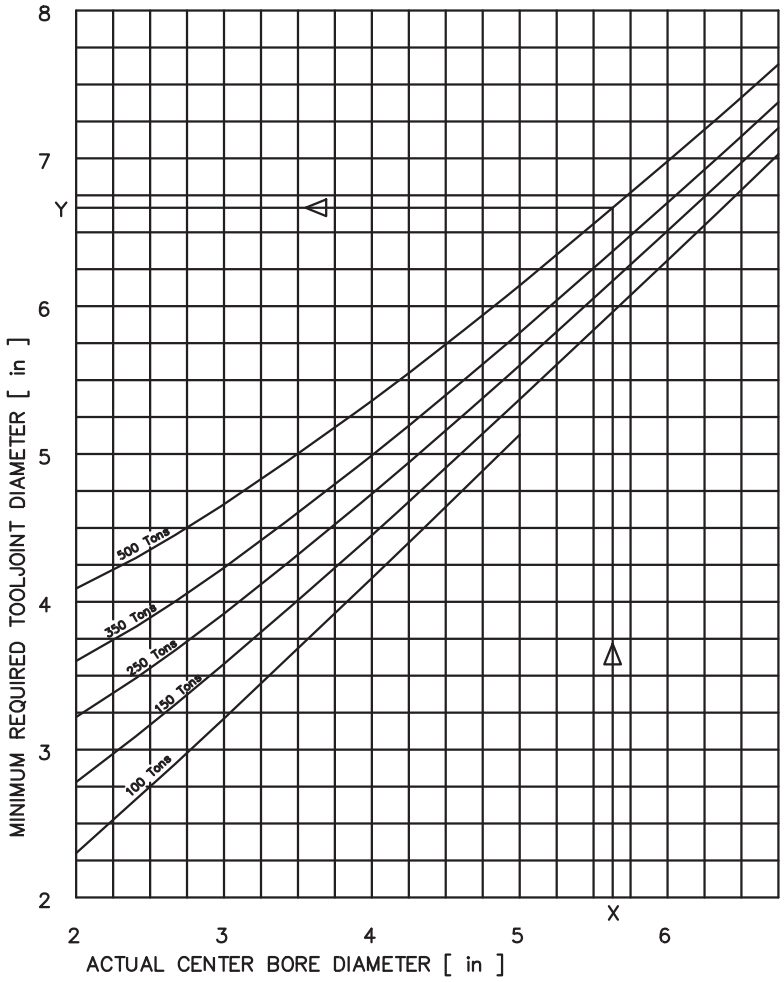

How to check your center bore:

1 Determine your actual center bore diameter (largest) in inches. (X)
2 The maximum wear on the diameter of the center bore is 0.25". But:
3 Before using your elevator, always check the tooljoint/bore combination by means of the table on the left.
4 Follow the line up to the line corresponding with the rating of your elevator. (Rating in short tons.)
5 Read on the left the minimum required tooljoint diameter in inches that can safely be handled with your elevator. (Y)

As soon as your tooljoint diameter falls below the corresponding rating line, you have to change either your elevator or your pipe.

Note:

In case your elevator has a wearbushing, keep this wearbushing in good condition to prevent wear of your center bore.

PART NO.	QTY.	NEXT ASS'Y	FINAL ASS'Y

Varco. B.J. OIL TOOLS
ETTEN-LEUR, THE NETHERLANDS

UNLESS OTHERWISE SPECIFIED
TOLERANCES (PER ANSI Y 14.5)
3 PLACE DECIMAL .XXX ± .010
2 PLACE DECIMAL .XX ± .03
1 PLACE DECIMAL .X ± .1
ANGELS ± .5 DEGREE
BREAK SHARP CORNERS .010 ± .005
MACHINED SURFACES 250 √

	NAME	DATE	PROJ.	MATERIAL
PREPARED	H.v.R.	10-15-'92		
CHECKED			SCALE	
APPROVED			UNITS INCH (MM)	WEIGHT - LBS/ - KG

REV.	E.C.N.	NAME	DATE	CHECKED
M				
L				
K				
J				
H				
G				
F				
E				
D				
C				
B				
A	11103	H.v.R.	2-5-'93	

ACAD FILE NO.: WDB001.DWG

TITLE: TOOLJOINT/BORE WEAR TABLE
18" BORE TYPE ELEVATORS

SIZE: B
DRAWING NO.: WD-001
SHEET 1 OF 1

REDRAWN / REPLACED BY:
REPLACES:

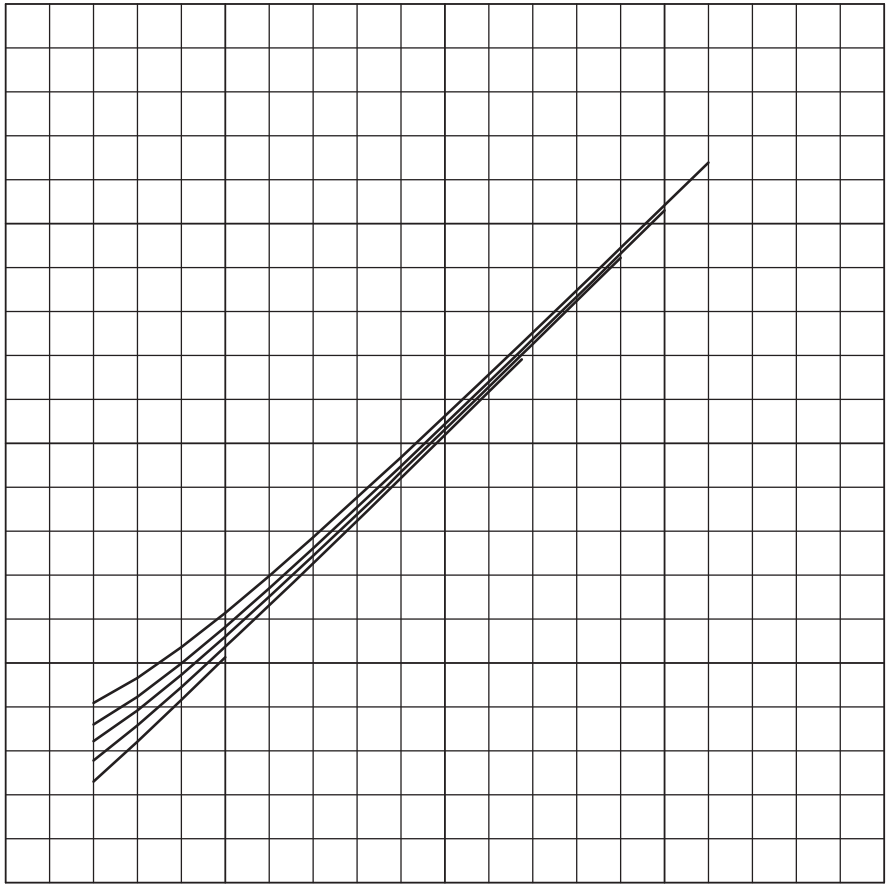

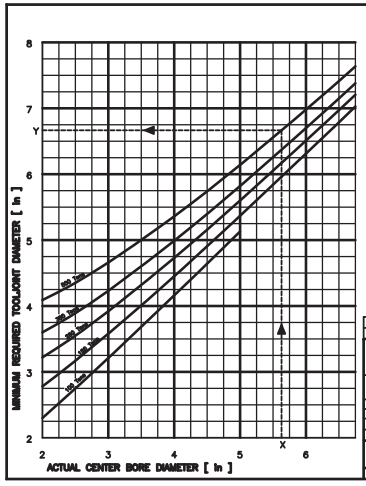

How to check your center bore:

1 Determine your actual center bore diameter (largest) in inches. (X)
2 The maximum wear on the diameter of the center bore is 0.25". But:
3 Before using your elevator, always check the tooljoint/bore combination by means of the table on the left.
4 Follow the line up to the line corresponding with the rating of your elevator. (Rating in short tons.)
5 Read on the left the minimum required tooljoint diameter in inches that can safely be handled with your elevator. (Y)

As soon as your tooljoint diameter falls below the corresponding rating line, you have to change either your elevator or your pipe.

Note:
In case your elevator has a wearbushing, keep this wearbushing in good condition to prevent wear of your center bore.

PART NO.	QTY.	NEXT ASSY	FINAL ASSY

Varco, N.V.
STEEN-USA, INC RENDRUNG

THIS DRAWING CONTAINS INFORMATION AND DATA PROPRIETARY TO VARCO INTERNATIONAL, INC. SUCH INFORMATION MAY NOT BE REPRODUCED, DISCLOSED OR DISTRIBUTED TO THIRD PARTIES WITHOUT WRITTEN PERMISSION OF THE OWNER

UNLESS OTHERWISE SPECIFIED
TOLERANCES ZERO ONE PLACE ±0.5
2 PLACE DECIMAL ±0.25 ± .25
3 PLACE DECIMAL ±0.127 ± .127
4 PLACE DECIMAL ±0.0127 ± .0127
ANGLES ± 2 DEGREE
BROKEN SHARP CORNERS .010 ± .005
MACHINED SURFACE 125

	NAME	DATE
PREPARED	R.v.Z.	19-12-78
CHECKED		
APPROVED		

FINAL
MATERIAL —
SCALE
UNITS INCH (MM) WEIGHT - LBS/ - KG.

REV.	ECN.	NAME	DATE	CHECKED
A	17192	R.v.Z.	2-5-78	

ACAD FILE NO.: WDB001.DWG

TITLE: TOOLJOINT/BORE WEAR TABLE
18" BORE TYPE ELEVATORS

SIZE B | DRAWING NO. WD-001 | SHEET 1 OF 1

REDRAWN / REPLACED BY:
REPLACES:

	PREPARED	CHECKED	APPROVED	B	535701	A.v.T.	10-08-'99	-	E
NAME	H. v. R.			A	11103	H. v. R.	2-5-'93	-	D
DATE	10-15-'92			REV.	E.C.N.	NAME	DATE	CHECKED	C 600278 A. d. P. 4-23-'01

TITLE

MAX. WEAR DATA FOR 18° CENTER LATCH ELEV. TO MAINTAIN 100% RATING

Varco. B.J.
EINDHOVEN, THE NETHERLANDS

DRAWING NO. B-WD-010

	ELEVATOR TYPE	GG	GG-AO	MGG	MGG	MGG-AO	HGG	HGG-AO	MG	RG	RG	RG	RGG
	RATED CAPACITY	350 TONS	350 TONS	175 TONS	250 TONS	250 TONS	500 TONS	500 TONS	100 TONS	125 TONS	175 TONS	200 TONS	150 TONS
	PART NO. ASS'Y	31068(-)	35143(-)	13884(-)	35005(-)	36056(-)	70013(-)	70222(-)	30157(-)	30156(-)	23540(-)	23606(-)	200680(-)
	SIZE	4 -- 5-1/2	4 -- 5-1/2	2-3/8 -- 3-1/2	3-1/2 -- 5-1/2	3-1/2 -- 5-1/2	4 -- 6-5/8	4 -- 6-5/8	2-3/8 -- 5	2-3/8 -- 3-1/2	4 -- 4-1/2	5 -- 5-1/2	2-3/8--3-1/2
STANDARD PINS													B
	HINGE PIN SIDE												
	HINGE PIN PART. NO.	33998	35141	13888	34908	36058	30553	70217	26813	23569	23545	23609	200683
	TOTAL CLEARANCE "A"	0.045	0.045	0.030	0.030	0.030	0.045	0.045	0.030	0.030	0.030	0.030	0.030
	HINGE PIN DIA. NEW MIN.	2.494	2.494	1.870	2.307	2.307	3.243	3.243	1.495	1.745	1.994	2.119	1.870
	BORE DIA. NEW MAX.	2.502	2.502	1.877	2.315	2.315	3.252	3.252	1.502	1.752	2.002	2.127	1.877
	BORE DIA. WORN MAX.	2.525	2.525	1.895	2.333	2.333	3.275	3.275	1.520	1.770	2.020	2.145	1.895
	LATCH PIN SIDE												
	LATCH PIN PART. NO.	33999	33999	13154	34907	34907	30613	30613	26814	23544	24045	24045	200684
	TOTAL CLEARANCE "B"	0.035	0.035	0.030	0.030	0.030	0.045	0.045	0.030	0.030	0.030	0.030	0.030
	LATCH PIN DIA. NEW MIN.	1.870	1.870	1.495	1.682	1.682	2.244	2.244	1.120	1.245	1.495	1.495	1.495
	BORE DIA. NEW MAX.	1.877	1.877	1.502	1.689	1.689	2.252	2.252	1.127	1.252	1.502	1.502	1.502
	BORE DIA. WORN MAX.	1.895	1.895	1.520	1.708	1.708	2.275	2.275	1.145	1.270	1.520	1.520	1.520
1/16 OVERSIZE PINS	HINGE PIN SIDE												
	HINGE PIN PART. NO.	33998-06	35141-06	13888-06	34908-06	36058-06	30553-06	70217-06	26813-06	23569-06	23545-06	23609-06	200683-06
	TOTAL CLEARANCE "A"	0.045	0.045	0.030	0.030	0.030	0.045	0.045	0.030	0.030	0.030	0.030	0.030
	HINGE PIN DIA. NEW MIN.	2.557	2.557	1.933	2.370	2.370	3.306	3.306	1.558	1.807	2.057	2.182	1.933
	BORE DIA. NEW MAX.	2.565	2.565	1.940	2.378	2.378	3.315	3.315	1.565	1.814	2.065	2.190	1.940
	BORE DIA. WORN MAX.	2.588	2.588	1.958	2.396	2.396	3.338	3.338	1.583	1.833	2.083	2.208	1.958
	LATCH PIN SIDE												
	LATCH PIN PART. NO.	33999-06	33999-06	13154-06	34907-06	34907-06	30613-06	30613-06	26814-06	23544-06	24045-06	24045-06	200684-06
	TOTAL CLEARANCE "B"	0.035	0.035	0.030	0.030	0.030	0.045	0.045	0.030	0.030	0.030	0.030	0.030
	LATCH PIN DIA. NEW MIN.	1.933	1.933	1.558	1.745	1.745	2.307	2.307	1.183	1.308	1.558	1.558	1.558
	BORE DIA. NEW MAX.	1.940	1.940	1.565	1.752	1.752	2.315	2.315	1.190	1.315	1.565	1.565	1.565
	BORE DIA. WORN MAX.	1.958	1.958	1.583	1.770	1.770	2.338	2.338	1.208	1.333	1.583	1.583	1.583
1/8 OVERSIZE PINS	HINGE PIN SIDE												
	HINGE PIN PART. NO.	33998-12	35141-12	13888-12	34908-12	36058-12	30553-12	70217-12	26813-12	23569-12	23545-12	23609-12	200683-12
	TOTAL CLEARANCE "A"	0.045	0.045	0.030	0.030	0.030	0.045	0.045	0.030	0.030	0.030	0.030	0.030
	HINGE PIN DIA. NEW MIN.	2.619	2.619	1.994	2.432	2.432	3.368	3.368	1.620	1.870	2.119	2.244	1.994
	BORE DIA. NEW MAX.	2.627	2.627 B	2.002	2.440	2.440	3.377	3.377	1.627	1.877	2.127	2.252	2.002
	BORE DIA. WORN MAX.	2.650	2.650 B	2.020	2.458	2.458	3.400	3.400	1.645	1.895	2.045	2.270	2.020
	LATCH PIN SIDE												
	LATCH PIN PART. NO.	33999-12	33999-12		34907-12	34907-12	30613-12	30613-12	26814-12				
	TOTAL CLEARANCE "B"	0.035	0.035		0.030	0.030	0.045	0.045	0.030				
	LATCH PIN DIA. NEW MIN.	1.994	1.994		1.807	1.807	2.369	2.369	1.245				
	BORE DIA. NEW MAX.	2.002	2.002		1.814	1.814	2.377	2.377	1.252				
	BORE DIA. WORN MAX.	2.020	2.020		1.832	1.832	2.400	2.400	1.270				
EARS	DIMENSION "D" MIN.	4.50	4.50	3.00	4.25	4.25	5.75	5.75	3.75	4.00 C	4.00	4.00	3.625 C
	RADIUS "R" *	1.875	1.875	2.00	1.875	1.875	2.50	2.50	1.50	1.625	1.625	1.625	2.00
	DIMENSION "E" *	7.375	7.375	6.25	6.813	6.813	8.625	8.625	5.00	5.125	5.625	6.625	6.25

* = PLACE WHERE "D" IS TO BE MEASURED. (SEE SHEET 2)

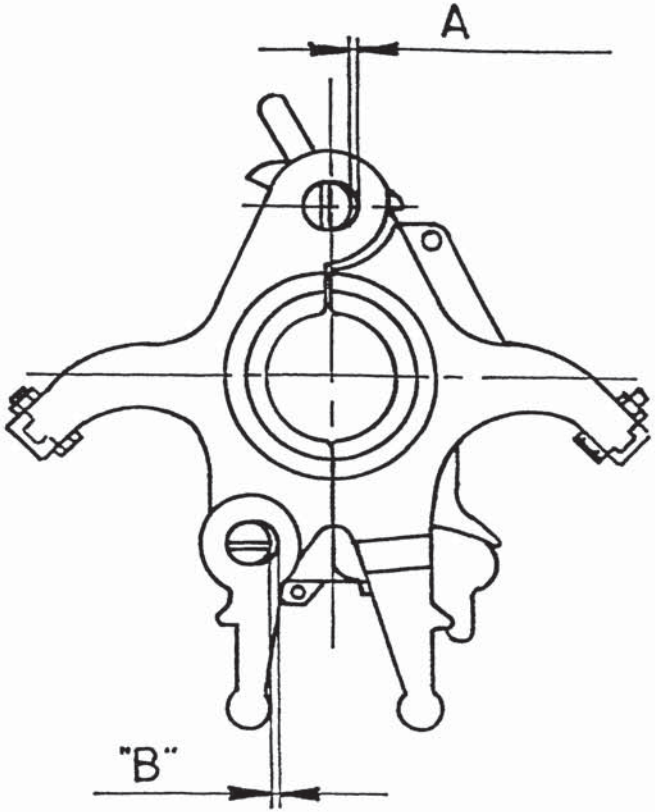

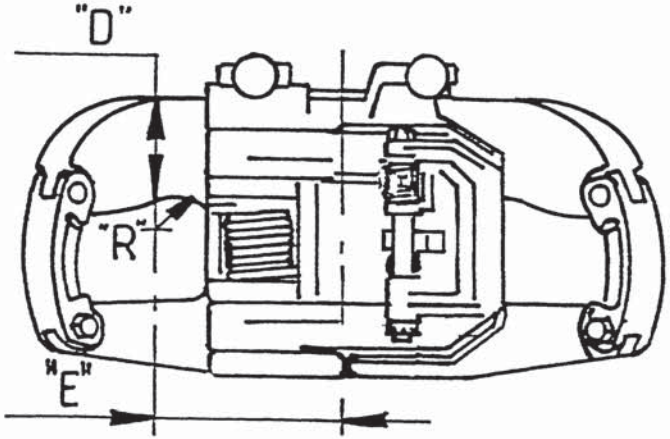

- MINIMUM BORE TAPER ANGLE IS 16°.
- ALLOWABLE LATCH LOCK PIN CLEARANCE WILL BE DETERMINED BY FUNCTIONING.

P/N Gauge:
59001005

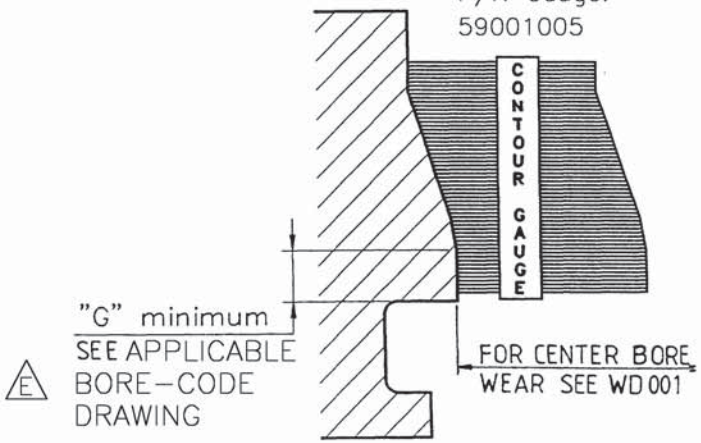

MEASURE THE ACTUAL BORE TAPER ANGLE WITH A CONTOUR GAUGE IN SEVERAL AREAS AROUND THE ELEVATOR BORE AND SUPERIMPOSE THE ACTUAL PATTERN OF THE ELEVATOR BORE ONTO THE INSPECTION SHEET WD 011.

ORIGINAL

PART NO.	QTY.	NEXT ASS'Y	FINAL ASS'Y

Varco BJ
OIL TOOLS
ETTEN-LEUR, THE NETHERLANDS

UNLESS OTHERWISE SPECIFIED
TOLERANCES (PER ANSI Y 14.5)
3 PLACE DECIMAL .XXX ± .010
2 PLACE DECIMAL .XX ± .03
1 PLACE DECIMAL .X ± .1
ANGELS ± .5 DEGREE
BREAK SHARP CORNERS .010 ± .005
MACHINED SURFACES 250√

	NAME	DATE	PROJ.	MATERIAL —
PREPARED	H.v.R.	10-15-'92		
CHECKED	A.Krijgsman	2-25-'93	SCALE NONE	
APPROVED		21 APR 93	UNITS INCH (MM)	WEIGHT - LBS/ - KG

REV.	E.C.N.	NAME	DATE	CHECKED
M				
L				
K				
J				
H				
G				
F				
E	00011747	N.U.	16/1/13	
D	701889	N.U.	4/14/11	
C	600278	A.d.P.	4/24/01	
B	535701	A.v.T.	10-08-98	C.D.
A	11103	H. V.R.	2-5-'93	

ACAD FILE NO.: WDB010B.DWG

TITLE: MAX. WEAR DATA FOR 18° CENTER LATCH ELEVATORS TO MAINTAIN 100% RATING

SIZE: B
DRAWING NO.: WD-010
SHEET 2 OF 2

REDRAWN / REPLACED BY:
REPLACES:

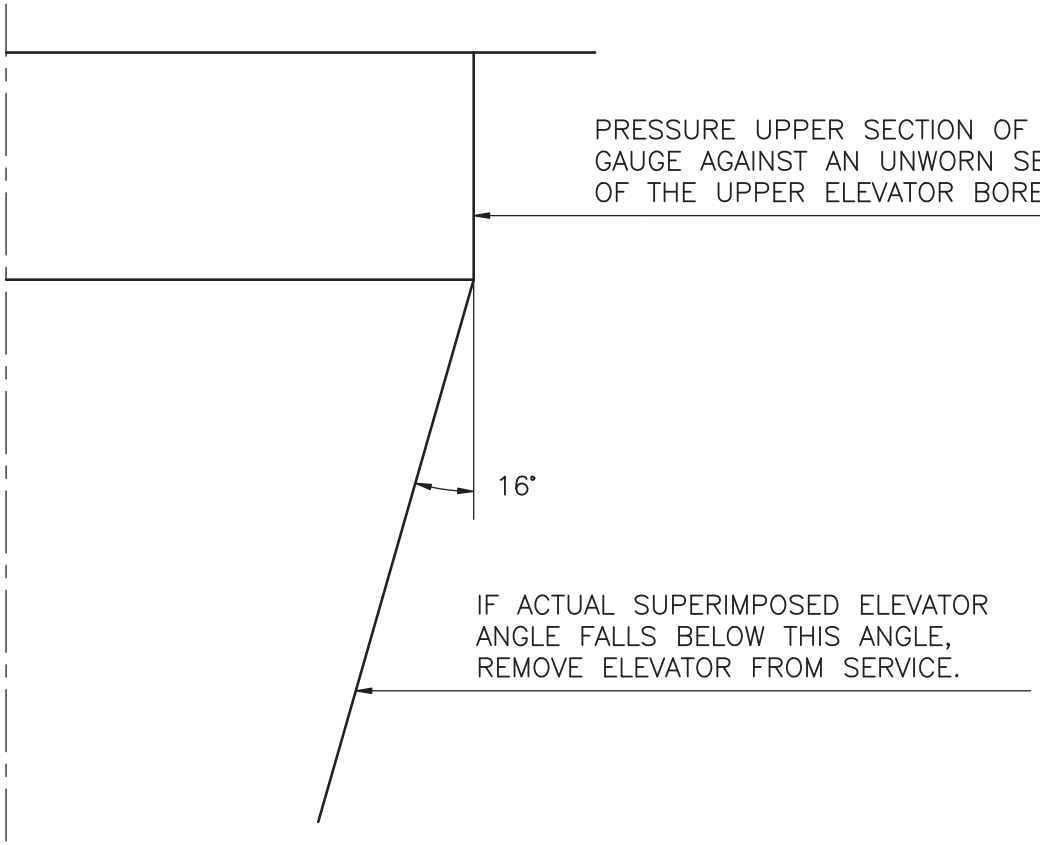

JOB No.	
ID Nos.	
INSPECTOR	
DATE	

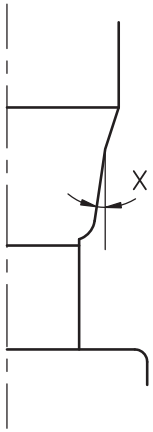

NOTE:

IN CASE OF UNDERCUTTING, X IS THE ANGLE TO BE SUPERIMPOSED.

PART NO.	QTY.	NEXT ASS'Y	FINAL ASS'Y

Varco BJ OIL TOOLS
ETTEN-LEUR, THE NETHERLANDS

UNLESS OTHERWISE SPECIFIED
TOLERANCES (PER ANSI Y 14.5)
3 PLACE DECIMAL .XXX € .010
2 PLACE DECIMAL .XX € .03
1 PLACE DECIMAL .X € .1
ANGELS € .5 DEGREE
BREAK SHARP CORNERS .010 € .005
MACHINED SURFACES 250

	NAME	DATE	PROJ.	MATERIAL
PREPARED	H.v.R.	11-25-'92		
CHECKED			SCALE 1 : 1	
APPROVED			UNITS INCH (MM)	WEIGHT LBS/ KG

REV.	E.C.N.	NAME	DATE	CHECKED
M				
L				
K				
J				
H				
G				
F				
E				
D				
C				
B				
A	11103	H.v.R.	2-5-'93	

ACAD FILE NO. : WDB011.DWG

TITLE INSPECTION SHEET 18° TAPERED BORE

SIZE B | DRAWING NO. WD-011 | SHEET 1 OF 1

REDRAWN / REPLACED BY:

REPLACES:

ORIGINAL

PREPARED	CHECKED	APPROVED	REV	ECN	NAME	DATE	CHECKED
R.WILLIER	A.J.E. PONT		B	11192	R.M.	12-3-'93	A.B.P.
12-07-'93	12-07-'93		A				-
			C	11264	RK	5-4-'94	C

TITLE: MAX. WEAR DATA FOR SJ/SP/SJL/SPL ELEVATORS TO MAINTAIN 100% RATING

Varco, BJ
ZOETERMEER, THE NETHERLANDS

DRAWING NO. B-WD-020 SHEET 1 OF 2

	ELEVATOR TYPE	SJ	SJ	SJ	SJ(L) C2	SJL	SJL	SJL	SP	SP	SPL	SPL
	RATED CAPACITY	5 TONS	5 TONS	5 TONS	5 TONS	5 TONS	5 TONS	5 TONS	5 TONS	5 TONS	5 TONS	5 TONS
	PART NO. ASS'Y											
	SIZE	C1 4 -- 7-5/8	8-5/8 -- 13-3/8	16 -- 24-1/2	2-3/8 -- 3-1/2	4 -- 7-5/8	8-5/8 -- 13-3/8	16 -- 24-1/2	2-3/8 -- 7-5/8	8-5/8 -- 10-3/4	2-3/8 -- 7-5/8	8-5/8--10-3/4
STANDARD PINS	**HINGE PIN SIDE**											
	HINGE PIN PART. NO.	33032	33032	33033	33032	200050	200050	200051	33032	33032	200050	200050
	TOTAL CLEARANCE "A"	0.025	0.020	0.015	0.025	0.025	0.020	0.015	0.025	0.020	0.025	0.020
	HINGE PIN DIA. NEW MIN.	0.996	0.996	1.184	0.996	0.996	0.996	1.184	0.996	0.996	0.996	0.996
	BORE DIA. NEW MAX.	1.001	1.001	1.190	1.001	1.001	1.001	1.190	1.001	1.001	1.001	1.001
	BORE DIA. WORN MAX.	1.015	1.012	1.198	1.015	1.015	1.012	1.198	1.015	1.012	1.015	1.012
	LATCH PIN SIDE											
	LATCH PIN PART. NO.	33035	33035	33035	33035	33035	33035	33035	33035	33035	33035	33035
	TOTAL CLEARANCE "B"	0.025	0.025	0.025	0.025	0.025	0.025	0.025	0.025	0.025	0.025	0.025
	LATCH PIN DIA. NEW MIN.	0.622	0.622	0.622	0.622	0.622	0.622	0.622	0.622	0.622	0.622	0.622
	BORE DIA. NEW MAX.	0.627	0.627	0.627	0.627	0.627	0.627	0.627	0.627	0.627	0.627	0.627
	BORE DIA. WORN MAX.	0.640	0.640	0.640	0.640	0.640	0.640	0.640	0.640	0.640	0.640	0.640
1/16 OVERSIZE	**HINGE PIN SIDE**											
	HINGE PIN PART. NO.	33032-06	33032-06	33033-06	33032-06	200050-06	200050-06	200051-06	33032-06	33032-06	200050-06	200050-06
	TOTAL CLEARANCE "A"	0.025	0.020	0.015	0.025	0.025	0.020	0.015	0.025	0.020	0.025	0.020
	HINGE PIN DIA. NEW MIN.	1.059	1.059	1.245	1.059	1.059	1.059	1.245	1.059	1.059	1.059	1.059
	BORE DIA. NEW MAX.	1.064	1.064	1.253	1.064	1.064	1.064	1.253	1.064	1.064	1.064	1.064
	BORE DIA. WORN MAX.	1.078	1.075	1.260	1.078	1.078	1.075	1.260	1.078	1.075	1.078	1.075
	LATCH PIN SIDE											
	LATCH PIN PART. NO.	33035-06	33035-06	33035-06	33035-06	33035-06	33035-06	33035-06	33035-06	33035-06	33035-06	33035-06
	TOTAL CLEARANCE "B"	0.025	0.025	0.025	0.025	0.025	0.025	0.025	0.025	0.025	0.025	0.025
	LATCH PIN DIA. NEW MIN.	0.685	0.685	0.685	0.685	0.685	0.685	0.685	0.685	0.685	0.685	0.685
	BORE DIA. NEW MAX.	0.690	0.690	0.690	0.690	0.690	0.690	0.690	0.690	0.690	0.690	0.690
	BORE DIA. WORN MAX.	0.703	0.703	0.703	0.703	0.703	0.703	0.703	0.703	0.703	0.703	0.703
1/8 OVERSIZE	**HINGE PIN SIDE**											
	HINGE PIN PART. NO.	33032-12	33032-12	33033-12	C3	200050-12	200050-12	200051-12	33032-12	33032-12	200050-12	200050-12
	TOTAL CLEARANCE "A"	0.025	0.020	0.015		0.025	0.020	0.015	0.025	0.020	0.025	0.020
	HINGE PIN DIA. NEW MIN.	1.121	1.121	1.308		1.121	1.121	1.308	1.121	1.121	1.121	1.121
	BORE DIA. NEW MAX.	1.126	1.126	1.315		1.126	1.126	1.315	1.126	1.126	1.126	1.126
	BORE DIA. WORN MAX.	1.140	1.137	1.323		1.140	1.137	1.323	1.140	1.137	1.140	1.137
	LATCH PIN SIDE											
	LATCH PIN PART. NO.											
	TOTAL CLEARANCE "B"											
	LATCH PIN DIA. NEW MIN.											
	BORE DIA. NEW MAX.											
	BORE DIA. WORN MAX.											
EARS	DIMENSION "D" MIN.	0.75	0.75	0.75	0.75	0.75	0.75	0.75	0.75	0.75	0.75	0.75
	RADIUS "R" *	0.625	0.625	0.625	0.625	0.625	0.625	0.625	0.625	0.625	0.625	0.625

* = PLACE WHERE "D" IS TO BE MEASERED. (SEE SHEET 2)

REPLACES B-WD-020 SHT 1 TRU 4

ACAD FILE NO. WDB020A

ITEM	QTY	DWG. SIZE	PART NUMBER	DESCRIPTION

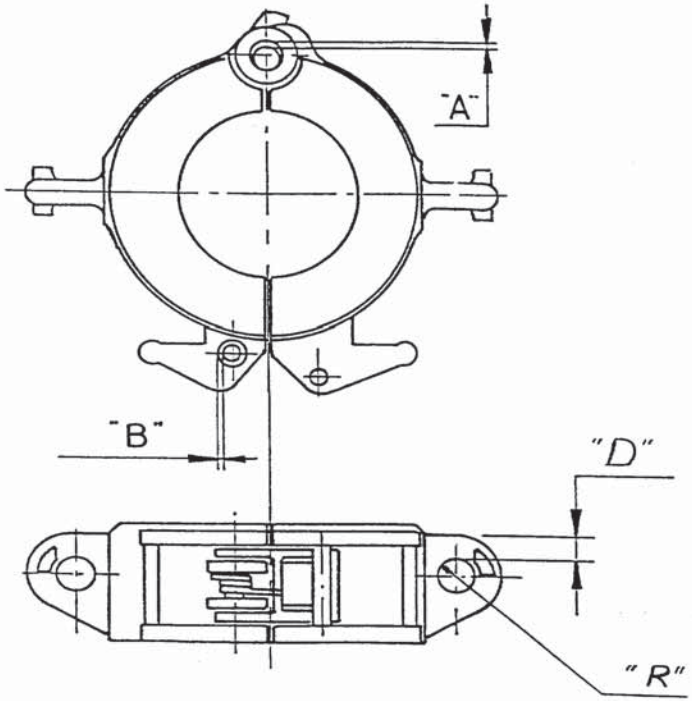

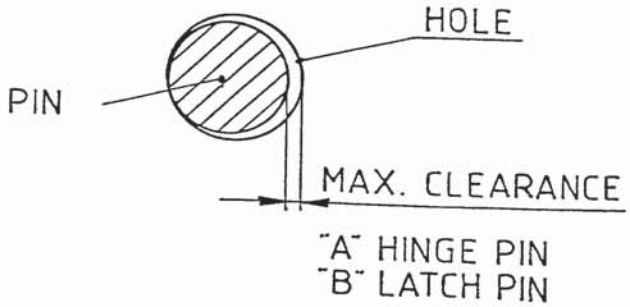

PART NO.	QTY.	NEXT ASS'Y	FINAL ASS'Y

Varco. BJ
OIL TOOLS
ETTEN-LEUR, THE NETHERLANDS

UNLESS OTHERWISE SPECIFIED
TOLERANCES (PER ANSI Y 14.5)
3 PLACE DECIMAL .XXX ± .010
2 PLACE DECIMAL .XX ± .03
1 PLACE DECIMAL .X ± .1
ANGELS ± .5 DEGREE
BREAK SHARP CORNERS .010 ± .005
MACHINED SURFACES 250 √

	NAME	DATE	PROJ.	MATERIAL
PREPARED	R.M	12-7-93		
CHECKED	A.d.P.	12-7-93	SCALE NONE	
APPROVED	[illegible]	[illegible]	UNITS INCH (MM)	WEIGHT LBS/ KG

REV.	E.C.N.	NAME	DATE	CHECKED
M				
L				
K				
J				
H				
G				
F				
E				
D				
C	11240	R.K.	5-4-94	[illegible]
B	11192	R.M	A.d.P.	
A				

ACAD FILE NO.: WDB020E.DWG

TITLE: MAX. WEAR DATA FOR SJ/SP/SJL/SPL ELEVATORS TO MAINTAIN 100% RATING

SIZE: B

DRAWING NO.: WD-020

SHEET 2 OF 2

REDRAWN / REPLACED BY:

REPLACES: B-WD-20 SHT 5 REV. A

PART NUMBER
WD-021

ITEM	QTY	DWG. SIZE	PART NUMBER	DESCRIPTION

H min. = 0.875"
RECESS DIA. = BORE DIA. + 1"

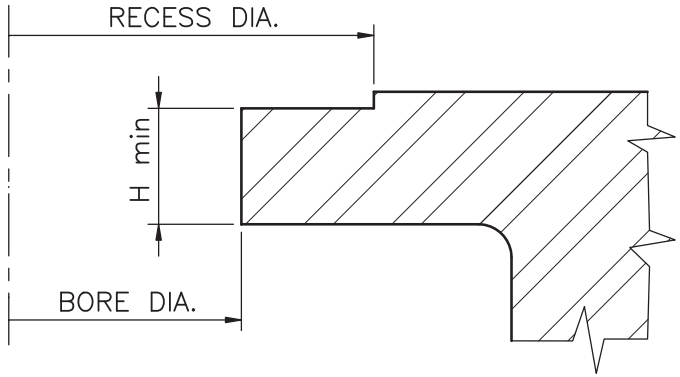

PART NO.	QTY.	NEXT ASS'Y	FINAL ASS'Y
	1	—	

Varco BJ OIL TOOLS
ETTEN-LEUR, THE NETHERLANDS

UNLESS OTHERWISE SPECIFIED

TOLERANCES (PER ANSI Y 14.5)
3 PLACE DECIMAL .XXX ± .010
2 PLACE DECIMAL .XX ± .03
1 PLACE DECIMAL .X ± .1
ANGELS ± .5 DEGREE

BREAK SHARP CORNERS .010 ± .005

MACHINED SURFACES 250

	NAME	DATE
PREPARED	R.M.	12-03-'93
CHECKED	A.D.P.	01-31-'94
APPROVED		

PROJ.

SCALE 1 : 1

UNITS INCH (MM)

MATERIAL

WEIGHT LBS/ KG

REV.	E.C.N.	NAME	DATE	CHECKED
M				
L				
K				
J				
H				
G				
F				
E				
D				
C				
B				
A	11192	R.M.	12-3-'93	A.D.P.

ACAD FILE NO. : WDB021.DWG

TITLE MAX.COLLAR WEAR DATA FOR SJ AND SJL ELEVATORS TO MAINTAIN 100% RATING

SIZE B

DRAWING NO. WD-021

SHEET 1 OF 1

REDRAWN / REPLACED BY:

REPLACES:

	PREPARED	CHECKED	APPROVED	B					E
NAME	H.BAKKERS			A	11103	H.BAKKERS	2-5-'93	-	D
DATE	10-16-'92			REV.	E.C.N.	NAME	DATE	CHECKED	C

TITLE

MAX. WEAR DATA FOR VARCO BJ SX ELEV. TO MAINTAIN 100% RATING

Varco. B.J. — ETTEN-LEUR, THE NETHERLANDS

DRAWING NO. B-WD-040

SHEET 1 OF 3

	ELEVATOR TYPE	SX	SX	SX	SX	SX	SX
	RATED CAPACITY	750 TON	350 TON	500 TON	500 TON	250 TON	750 TON
	PART NO. ASS'Y	51285	29965	29964	30729	30598	52644
	SIZE	12-3/4 -14	13-3/8	13-3/8	16	20	7-14
STANDARD PINS	HINGE PIN SIDE						
	HINGE PIN PART. NO.	51442	29956	29956	29956	29956	SEE 51285
	TOTAL CLEARANCE "A"	0.045	0.030	0.030	0.030	0.030	
	HINGE PIN DIA. NEW MIN	2.494	2.119	2.119	2.119	2.119	
	BORE DIA. NEW MAX	2.502	2.127	2.127	2.127	2.127	
	BORE DIA. WORN MAX.	2.525	2.145	2.145	2.145	2.145	
	LATCH PIN SIDE						
	LATCH PIN PART. NO.	51443	29951	29951	30696	29951	
	TOTAL CLEARANCE "B"	0.035	0.035	0.035	0.035	0.035	
	LATCH PIN DIA. NEW MIN	1.121	1.121	1.121	1.121	1.121	
	BORE DIA. NEW MAX	1.127	1.127	1.127	1.127	1.127	
	BORE DIA. WORN MAX.	1.145	1.145	1.145	1.145	1.145	
1/16 OVERSIZE PINS	HINGE PIN SIDE						
	HINGE PIN PART. NO.	51442-06	29956-06	29956-06	29956-06	29956-06	
	TOTAL CLEARANCE "A"	0.045	0.030	0.030	0.030	0.030	
	HINGE PIN DIA. NEW MIN	2.556	2.182	2.182	2.182	2.182	
	BORE DIA. NEW MAX	2.565	2.190	2.190	2.190	2.190	
	BORE DIA. WORN MAX.	2.588	2.208	2.208	2.208	2.208	
	LATCH PIN SIDE						
	LATCH PIN PART. NO.	51443-06	29951-06	29951-06	30696-06	29951-06	
	TOTAL CLEARANCE "B"	0.035	0.035	0.035	0.035	0.035	
	LATCH PIN DIA. NEW MIN	1.182	1.182	1.182	1.182	1.182	
	BORE DIA. NEW MAX	1.190	1.190	1.190	1.190	1.190	
	BORE DIA. WORN MAX.	1.208	1.208	1.208	1.208	1.208	
1/8 OVERSIZE PINS	HINGE PIN SIDE						
	HINGE PIN PART. NO.	51442-12	29956-12	29956-12	29956-12	29956-12	
	TOTAL CLEARANCE "A"	0.045	0.030	0.030	0.030	0.030	
	HINGE PIN DIA. NEW MIN	2.619	2.244	2.244	2.244	2.244	
	BORE DIA. NEW MAX	2.627	2.252	2.252	2.252	2.252	
	BORE DIA. WORN MAX.	2.652	2.270	2.270	2.270	2.270	
	LATCH PIN SIDE						
	LATCH PIN PART. NO.		29951-12	29951-12	30696-12	29951-12	
	TOTAL CLEARANCE "B"		0.035	0.035	0.035	0.035	
	LATCH PIN DIA. NEW MIN		1.245	1.245	1.245	1.245	
	BORE DIA. NEW MAX		1.252	1.252	1.252	1.252	
	BORE DIA. WORN MAX.		1.270	1.270	1.270	1.270	
EARS	DIMENSION "D" MIN.	6.750"	4.500"	5.750"	5.500"	4.500"	
	RADIUS "R" *	3.000"	2.000"	2.000"	2.000"	2.000"	
	DIMENSION "E" *	17.000"	15.000"	15.000"	15.500"	18.000"	

* PLACE WHERE "D" IS TO BE MEASURED. (SEE SHEET 3)

ACAD FILE NO. WDB040A

	PREPARED	CHECKED	APPROVED	B					E
NAME	H.BAKKERS			A	11103	H.BAKKERS	2-5-'93	-	D
DATE	10-16-'92			REV.	E.C.N.	NAME	DATE	CHECKED	C

TITLE

MAX. WEAR DATA FOR VARCO BJ SLX ELEV. TO MAINTAIN 100% RATING

Varco. B.J. OILFIELD EITEN-LEUR, THE NETHERLANDS

DRAWING NO. B-WD-040

	ELEVATOR TYPE	SLX	SLX	SLX	SLX	SLX	SLX	SLX	SLX	SLX	SLX	SLX
	RATED CAPACITY	65 TONS	100 TONS	100 TONS	100 TONS	150 TONS	150 TONS	150 TONS	150 TONS	150 TONS	150 TONS	250 TONS
	PART NO. ASS'Y	33734	33693	33809	33854	31239	33950	33982	34087	33632	52755	34175
	SIZE	1.660_1.900	2-3/8_2-7/8	3-1/2_4	4-1/2_5-1/2	6-5/8_8-5/8	9-5/8_10-3/4	11-3/4_13-3/8	16	18-5/8_20	24-30	24-1/2
STANDARD PINS	HINGE PIN SIDE											
	HINGE PIN PART. NO.	32424-3	32424-5	34612	34613	34611	33953	33985	33646	33646	52763	34179
	TOTAL CLEARANCE "A"	0.020	0.020	0.025	0.025	0.030	0.030	0.035	0.035	0.035	0.045	0.045
	HINGE PIN DIA. NEW MIN	0.746	0.746	0.996	0.871	1.121	1.495	1.870	1.870	1.870	2.494	2.494
	BORE DIA. NEW MAX	0.752	0.752	1.002	0.877	1.127	1.502	1.877	1.877	1.877	2.502	2.502
	BORE DIA. WORN MAX.	0.762	0.762	1.017	0.892	1.145	1.520	1.895	1.895	1.895	2.525	2.525
	LATCH PIN SIDE											
	LATCH PIN PART. NO.	33700-2	33700-2	29980-3	29980-3	32424-3	32424-3	32424-3	33645	33645	52760	33645
	TOTAL CLEARANCE "B"	0.020	0.020	0.025	0.025	0.030	0.030	0.030	0.035	0.035	0.035	0.035
	LATCH PIN DIA. NEW MIN	0.497	0.497	0.622	0.622	0.746	0.746	0.746	0.996	0.996	1.245	0.996
	BORE DIA. NEW MAX	0.501	0.501	0.626	0.626	0.752	0.752	0.752	1.002	1.002	1.252	1.002
	BORE DIA. WORN MAX.	0.512	0.512	0.640	0.640	0.770	0.770	0.770	1.020	1.020	1.270	1.020
1/16 OVERSIZE PINS	HINGE PIN SIDE											
	HINGE PIN PART. NO.	32424-306	32424-506	34612-06	34613-06	34611-06	33953-06	33985-306	33646-06	33646-06	52763-06	34179-06
	TOTAL CLEARANCE "A"	0.020	0.020	0.025	0.025	0.030	0.030	0.035	0.035	0.035	0.045	0.045
	HINGE PIN DIA. NEW MIN	0.808	0.808	1.058	0.933	1.183	1.557	1.932	1.932	1.932	2.556	2.556
	BORE DIA. NEW MAX	0.815	0.815	1.065	0.940	1.190	1.565	1.940	1.940	1.940	2.565	2.565
	BORE DIA. WORN MAX.	0.825	0.825	1.078	0.953	1.208	1.583	1.958	1.958	1.958	2.588	2.588
	LATCH PIN SIDE											
	LATCH PIN PART. NO.	33700-206	33700-206	29980-306	29980-306	32424-306	32424-306	32424-306	33645-06	33645-06	52760-06	33645-06
	TOTAL CLEARANCE "B"	0.020	0.020	0.025	0.025	0.030	0.030	0.030	0.035	0.035	0.035	0.035
	LATCH PIN DIA. NEW MIN	0.559	0.559	0.684	0.684	0.808	0.808	0.808	1.058	1.058	1.307	1.058
	BORE DIA. NEW MAX	0.564	0.564	0.689	0.689	0.815	0.815	0.815	1.065	1.065	1.315	1.065
	BORE DIA. WORN MAX.	0.575	0.575	0.703	0.703	0.833	0.833	0.833	1.083	1.083	1.333	1.083
1/8 OVERSIZE PINS	HINGE PIN SIDE											
	HINGE PIN PART. NO.	32424-312	32424-512	34612-12	34613-12	34611-12	33953-12	33985-12	33646-12	33646-12	52763-12	34179-12
	TOTAL CLEARANCE "A"	0.020	0.020	0.025	0.025	0.030	0.030	0.035	0.035	0.035	0.045	0.045
	HINGE PIN DIA. NEW MIN	0.871	0.871	1.121	0.996	1.245	1.620	1.994	1.994	1.994	2.619	2.619
	BORE DIA. NEW MAX	0.877	0.877	1.127	1.002	1.252	1.627	2.002	2.002	2.002	2.627	2.627
	BORE DIA. WORN MAX.	0.887	0.887	1.140	1.015	1.270	1.645	2.020	2.020	2.020	2.650	2.650
	LATCH PIN SIDE											
	LATCH PIN PART. NO.											
	TOTAL CLEARANCE "B"											
	LATCH PIN DIA. NEW MIN											
	BORE DIA. NEW MAX											
	BORE DIA. WORN MAX.											
EARS	DIMENSION "D" MIN.	2.250"	2.875"	2.875"	2.875"	3.687"	3.687"	3.687"	3.500"	3.500"	3.500"	4.687"
	RADIUS "R" *	1.250"	1.500"	1.500"	1.500"	2.000"	2.000"	2.000"	2.000"	2.000"	2.000"	2.000"
	DIMENSION "E" *	5.750"	6.000"	6.750"	7.937"	10.625"	11.500"	13.750"	15.375"	17.250"	26.375"	20.562"

* PLACE WHERE "D" IS TO BE MEASURED. (SEE SHEET 3)

ACAD FILE NO. WDB040B

	PREPARED	CHECKED	APPROVED	B	ECL-070367	H. KRUNEN	Aug 7, 2012		E
NAME	H.BINDERS			A	11103	H.BINDERS	2-5-93		D
DATE	10-16-92	2-25-93	2-4-93	REV.	E.C.N.	NAME	DATE	CHECKED	C

TITLE

MAX. WEAR DATA FOR VARCO BJ SLX AND SX ELEV. TO MAINTAIN 100% RATING

Varco. BJ.
EITEH-LEUR, THE NETHERLANDS

DRAWING NO. B-WD-040

SHEET 3 OF 3

SX

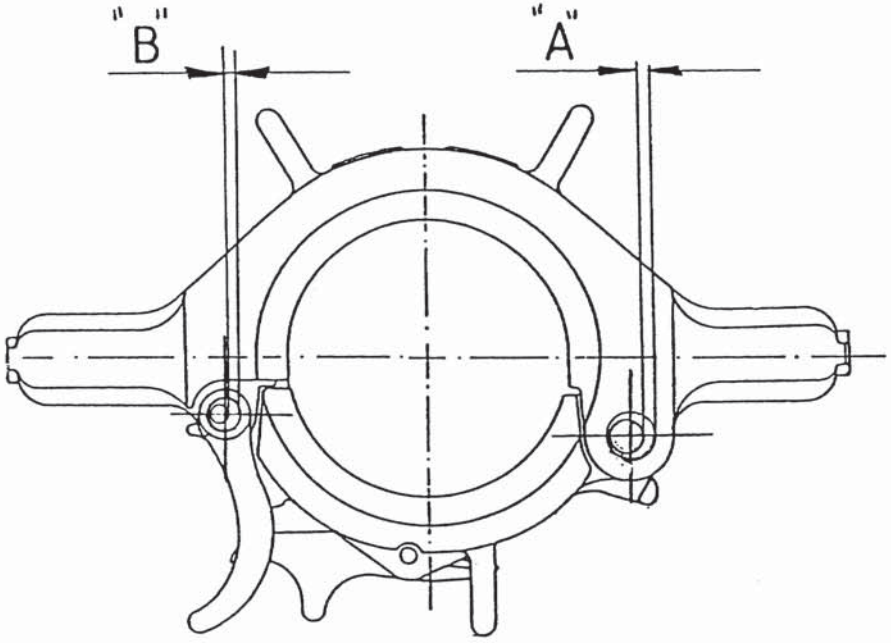

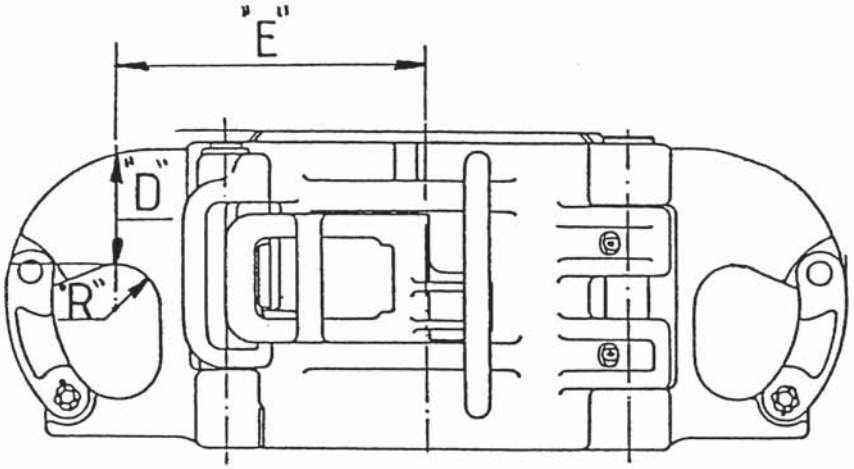

SLX

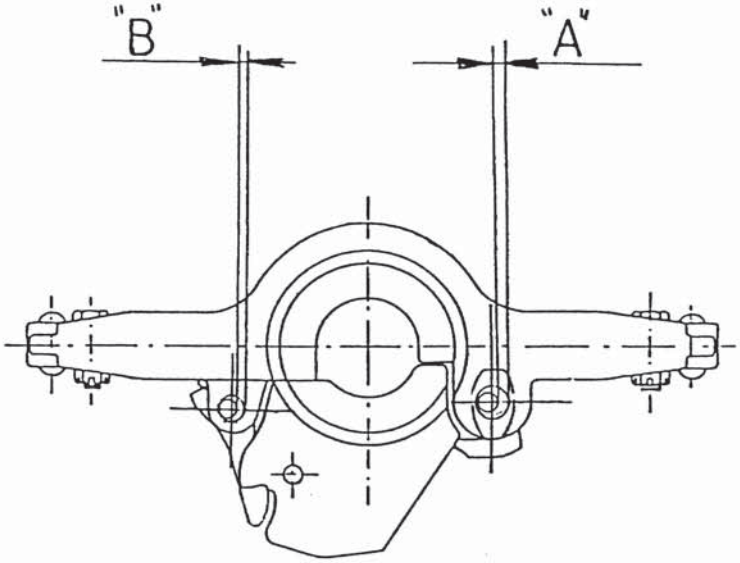

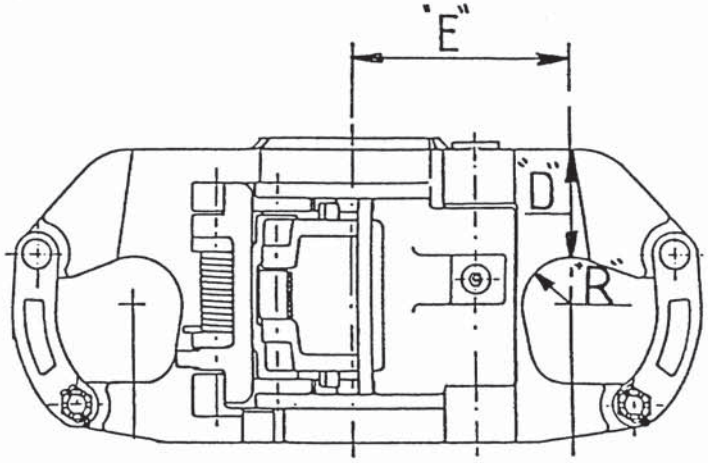

ORIGINAL

ACAD FILE NO. WDB040C

	PREPARED	CHECKED	APPROVED	B					E
NAME	R.M.			A	11192	R.M.	12-3-'93	-	D
DATE	12-3-'93			REV.	E.C.N.	NAME	DATE	CHECKED	C

TITLE

MAX. COLLAR WEAR DATA FOR VARCO BJ SX ELEV. TO MAINTAIN 100 % RATING

Varco BJ OIL TOOLS
ETTEN-LEUR, THE NETHERLANDS

DRAWING NO. B-WD-041

SHEET 1 OF 2

ELEVATOR TYPE	SX	SX	SX	SX	SX	SX
RATED CAPACITY	750 TON	350 TON	500 TON	500 TON	250 TON	750 TON
PART NO. ASS'Y	51285	29965	29964	30729	30598	52644
SIZE	12-3/4 -- 14	9-5/8--13-3/8	9-5/8--13-3/8	16	20	7--14
BORE SIZE		ALL	ALL		ALL	
H min. (Ref.)		FLAT(2-1/2)	FLAT(2-1/2)		FLAT(1-3/4)	
BORE SIZE						
H min. (Ref.)						

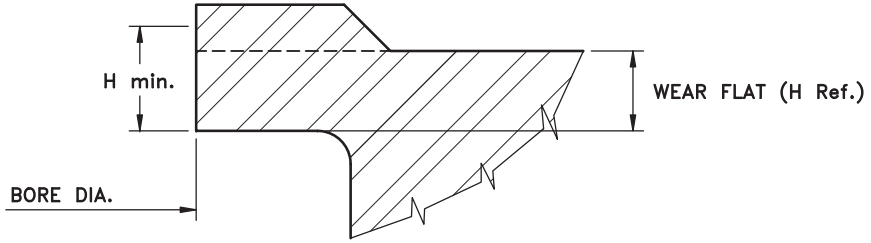

ACAD FILE NO.
WDB041A

	PREPARED	CHECKED	APPROVED	B					E
NAME	R.M.			A	11192	R.M.	12-3-'93	-	D
DATE	12-3-'93			REV.	E.C.N.	NAME	DATE	CHECKED	C

TITLE

MAX. COLLAR WEAR DATA FOR VARCO BJ SLX ELEV. TO MAINTAIN 100 % RATING

Varco. BJ. OIL TOOLS
ETTEN-LEUR, THE NETHERLANDS

DRAWING NO. B-WD-041

SHEET 2 OF 2

ELEVATOR TYPE	SLX	SLX	SLX	SLX	SLX	SLX	SLX	SLX	SLX	SLX	SLX
RATED CAPACITY	65 TONS	100 TONS	100 TONS	100 TONS	150 TONS	150 TONS	150 TONS	150 TONS	150 TONS	150 TONS	250 TONS
PART NO. ASS'Y	33734	33693	33809	33854	31239	33950	33982	34087	33632	52755	34175
SIZE	1.660_1.900	2-3/8_2-7/8	3-1/2_4	4-1/2_5-1/2	5-1/2_8-5/8	9-5/8_10-3/4	11-3/4_13-3/8	16	18-5/8_20	24-30	24-1/2
BORE SIZE	< 2	ALL	ALL	ALL	≤ 5-7/8	ALL	ALL	ALL	ALL	ALL	ALL
H min.	1-5/16	FL.(1-9/16)	FLAT(1-1/4)	FLAT(1-1/2)	1-5/8	FLAT(1-1/2)	FLAT(1-3/4)	FLAT(1-3/4)	FLAT(1-3/4)	FLAT(2)	FLAT(1-3/4)
BORE SIZE	≥ 2				> 5-7/8						
H min.	FLAT(1-1/4)				FLAT(1-1/2)						
BORE SIZE											
H min.											

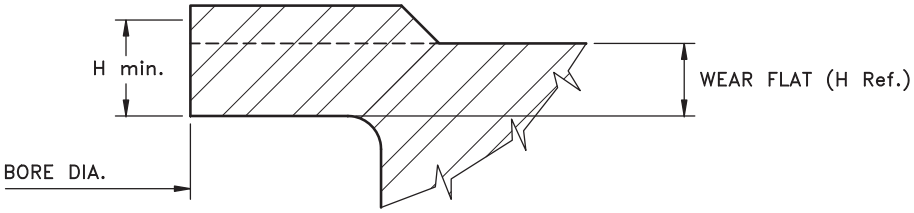

ACAD FILE NO. WDB041B

SMX FRAME PART NO.:	DIM. A MIN.:	DIM.B MIN.:	BORE; DIM. C, D, E MAX.:	DIM. F MIN.:
50006430Y	3.375	3.375	SEE REPAIR MANUAL SECTION 7	0.700
50006400Y	3.375	3.375	SEE REPAIR MANUAL SECTION 7	0.700
50006438Y	3.375	3.375	SEE REPAIR MANUAL SECTION 7	0.700
50006426Y	4.375	4.375	SEE REPAIR MANUAL SECTION 7	0.700
50006454Y	3.375	3.375	SEE REPAIR MANUAL SECTION 7	0.700
50006455Y	3.375	3.375	SEE REPAIR MANUAL SECTION 7	0.700
50006740Y	4.375	4.375	SEE REPAIR MANUAL SECTION 7	0.700
50006440Y	4.375	4.375	SEE REPAIR MANUAL SECTION 7	0.700
50006450Y	4.375	4.375	SEE REPAIR MANUAL SECTION 7	0.700
50006460Y	4.375	4.375	SEE REPAIR MANUAL SECTION 7	0.700

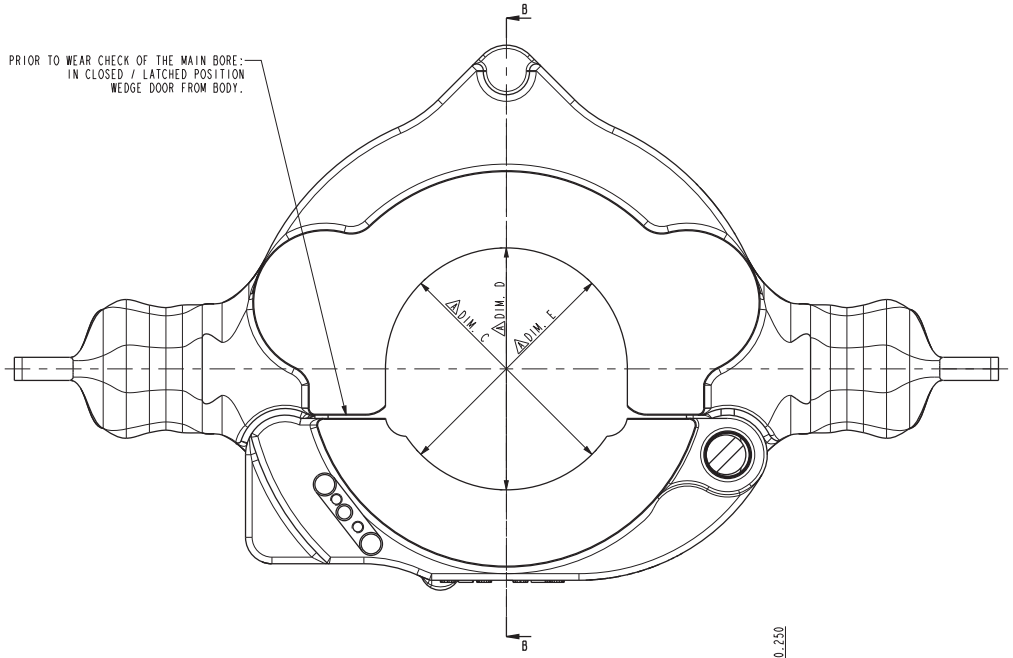

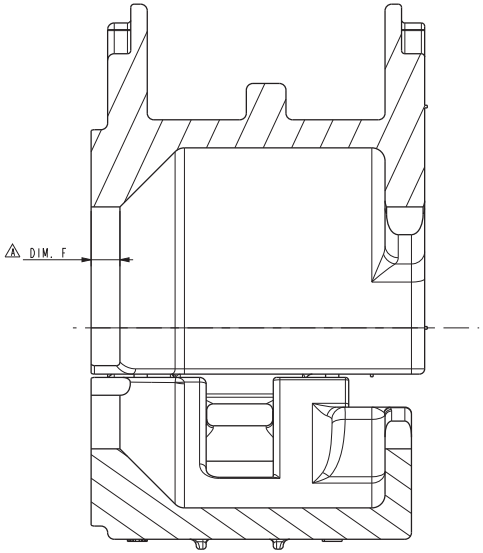

SECTION B-B

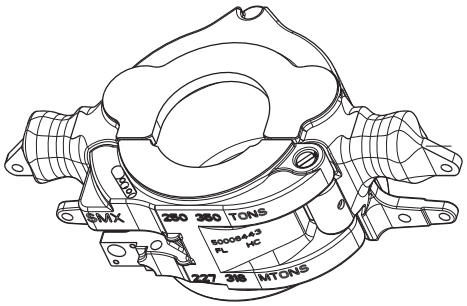

SCALE 1:5

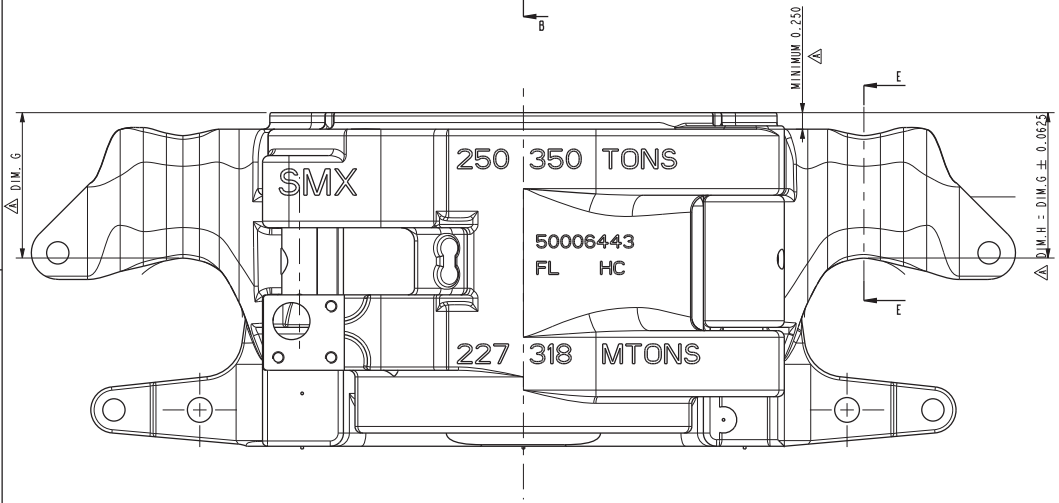

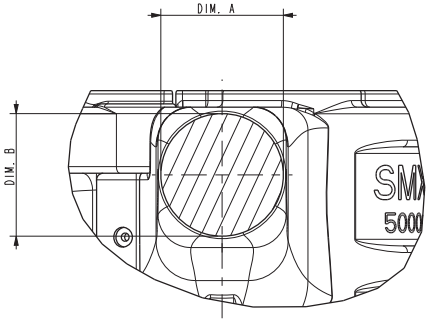

SECTION E-E
2PLC.

PARTNUMBER				
MATERIAL				
SURF. FINISH / PAINTSPEC.	-			
COLOR	-			
WEIGHT	Lbs			kg
ORIGINAL DOCUMENT		LATEST REVISION		
NAME	CdL	NAME	CdL	REV.
DATE	14-Feb-07	DATE	05-AUG-10	A
		E.C.N.	0701090	

UNLESS OTHERWISE SPECIFIED
TOLERANCES (PER ANSI Y 14.5)
3 PLACE DECIMAL .XXX ± .010
2 PLACE DECIMAL .XX ± .03
1 PLACE DECIMAL .X ± .1
ANGLES ± .5 DEGREE
BREAK SHARP CORNERS .010 ± .005
MACHINED SURFACES 250
TORCHCUT SURFACES 1000
ALL WELD SYMBOLS ACC. TO ISO

DO NOT SCALE DOCUMENT

THIS DOCUMENT IS PDMLink CONTROLLED

NATIONAL OILWELL VARCO

SCALE 2:5

PROJ.

UNITS INCH (mm)

TITLE: SMX WEAR DATA

SIZE: D

DRAWING NO.: WD-045

SHEET 1 OF 1

ORIGINAL

ITEM	QTY	DWG. SIZE	PART NUMBER	DESCRIPTION

PART NUMBER WDB050B

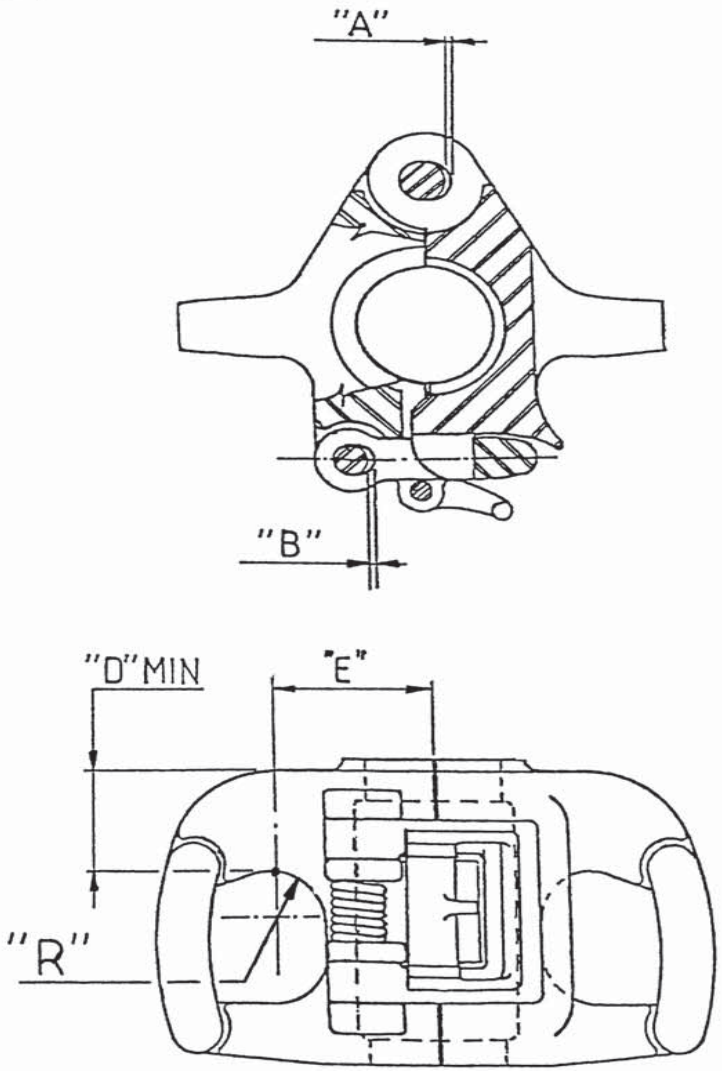

– ALLOWABLE LATCH LOCK PIN CLEARANCE WILL BE DETERMINED BY FUNCTIONING.

PART NO.	QTY.	NEXT ASS'Y	FINAL ASS'Y

Varco. BJ
OIL TOOLS
ETTEN-LEUR, THE NETHERLANDS

UNLESS OTHERWISE SPECIFIED
TOLERANCES (PER ANSI Y 14.5)
3 PLACE DECIMAL .XXX ± .010
2 PLACE DECIMAL .XX ± .03
1 PLACE DECIMAL .X ± .1
ANGELS ± .5 DEGREE
BREAK SHARP CORNERS .010 ± .005
MACHINED SURFACES 250

	NAME	DATE	PROJ.	MATERIAL
PREPARED	A. KRUNEN	10-28-'92		
CHECKED		2-25-'93	SCALE NONE	
APPROVED		2 MAR 93	UNITS INCH (MM)	WEIGHT LBS/ KG

REV.	E.C.N.	NAME	DATE	CHECKED
M				
L				
K				
J				
H				
G				
F				
E				
D				
C	535801	W.B.	7 DEC 98	F.S.
B	11192	ADP	1-12-93	
A	11103	A. KRUNEN	2-5-'93	

ACAD FILE NO. : WDB050B

TITLE MAX. WEAR DATA FOR VARCO BJ TA AND RA ELEV. TO MAINTAIN 100% RATING

SIZE B | DRAWING NO. WD-050 | SHEET 2 OF 2

REDRAWN / REPLACED BY:

REPLACES:

ORIGINAL

	PREPARED	CHECKED	APPROVED	B					E
NAME	R.M.			A	11192	R.M.	12-3-'93		D
DATE	12-3-'93			REV.	E.C.N.	NAME	DATE	CHECKED	C

TITLE
MAX. COLLAR WEAR DATA VARCO BJ A-TYPE ELEV. TO MAINTAIN 100% RATING

Varco. BJ. OIL TOOLS
ETTEN-LEUR, THE NETHERLANDS

DRAWING NO. B-WD-051

SHEET 1 OF 1

ELEVATOR TYPE	RA				TA		TA			TA		TA
RATED CAPACITY	125 TONS	150 TONS	175 TONS	175 TONS	150 TONS	150 TONS	100 TONS	100 TONS	100 TONS	65 TONS	65 TONS	35 TONS
PART NO. ASS'Y	25462(–)	25459(–)	25456(–)	25453(–)	32754(–)	39342(–)	32383(–)	32384(–)	200000	32385(–)	32386(–)	32387(–)
SIZE	2-3/8 -- 3-1/2	4 -- 4-1/2	4-1/2 -- 5-1/2	6-5/8 -- 7	4-1/2 -- 8-5/8	8-1/2 -- 11-1/4	2-3/8 -- 2-7/8	3-1/2 -- 5	4-3/4 -- 8-5/8	1.660 -- 2-7/8	3-1/2 -- 4-1/2	1.050 -- 2-7/8
BORE SIZE	< 3-1/2	ALL	ALL	ALL	ALL	ALL	≤ 2-5/8	< 4	ALL	< 1-3/4	ALL	
H min. (Ref.)	1 5/8	FLAT(1-7/8)	FLAT(1-3/4)	FLAT(1-3/4)	FLAT	FLAT	1-3/8	1-5/16	FLAT	1-3/16	FLAT(1-1/4)	
BORE SIZE	≥ 3-1/2						> 2-5/8	≥ 4		≥ 1-3/4		
H min. (Ref.)	1 3/8						FLAT(1-1/4)	FLAT(1-1/4)		FLAT(1-1/4)		

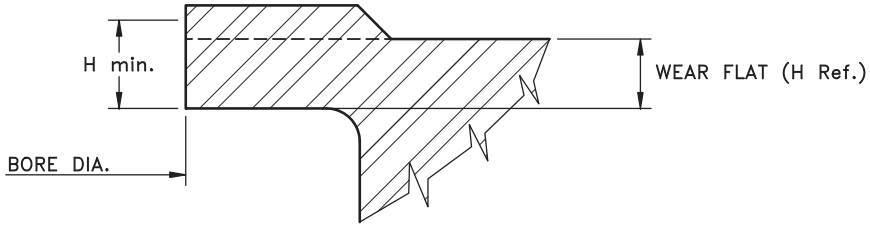

TA 35, 65, 100 TON ELEVATOR

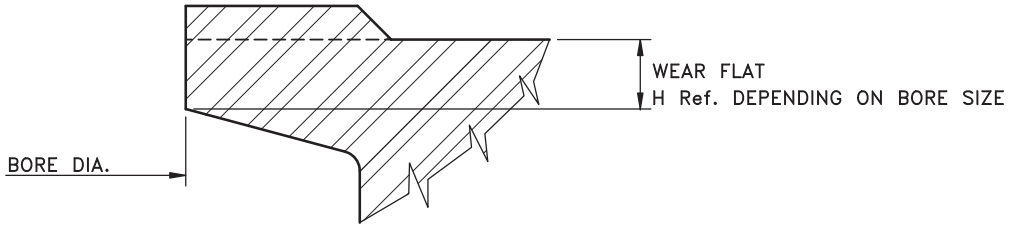

TA 150 TON ELEVATOR

ACAD FILE NO. WDB051

	PREPARED	CHECKED	APPROVED	B	11192	A.d.P.	1-5-'94	C.Q.	E	00035886	R.H.	14-04-'15
NAME	D.M.	A.K.	C.Q.	A	11103	D.M.	2-5-'93	C.Q.	D	600278	A.d.P.	04-24-'01
DATE	2-12-'93	2-25-'93	5-21-'93	REV.	E.C.N.	NAME	DATE	CHECKED	C	575401	C.D.	05-10-'99 J.v.B.

TITLE

MAX. WEAR DATA FOR SLIP ELEVATORS TO MAINTAIN 100% RATING

Varco. BJ. OILTOOLS
EITEH-LEUR, THE NETHERLANDS

DRAWING NO. B-WD-060

SHEET 1 OF 2

	ELEVATOR TYPE									E			
	RATED CAPACITY	LYT	MYT	YT	HYT	YC	MYC	HYC	HYC. AIR		YT		
	PART NO. ASS'Y	20 TONS	40 TONS	75 TONS	150 TONS	75 TONS	125 TONS	200 TONS	200 TONS		75 TONS		
		28750	29328	55600	39284	24140	200360	55310	70166		10114191		
STANDARD PINS	HINGE PIN SIDE												
	HINGE PIN PART. NO.	28753	29333	23116-1	39239	24181	200364	55311	70180		10143783-001		
	TOTAL CLEARANCE "A"	0.025	0.025	0.030	0.035	0.035	0.040	0.045	0.045		0.030		
	HINGE PIN MIN. DIA. NEW	0.996	1.245	1.620	1.994	1.745	2.369	2.869	2.869		1.495		
	MAX. BORE DIA. NEW	1.002	1.252	1.627	2.002	1.752	2.377	2.878	2.878		1.503		
	BORE DIA. WORN MAX.	1.015	1.265	1.645	2.020	1.770	2.400	2.900	2.900		1.521		
	LATCH PIN SIDE												
	LATCH PIN PART. NO.	28757	29334	24182	39238	24182	200365	55312	55312		10143789-001		
	TOTAL CLEARANCE "B"	0.025	0.025	0.030	0.035	0.035	0.035	0.045	0.045		0.030		
	LATCH PIN MIN. DIA. NEW	0.622	0.933	1.370	1.745	1.370	1.620	1.745	1.745		1.370		
	MAX. BORE DIA. NEW	0.627	0.940	1.377	1.752	1.377	1.627	1.752	1.752		1.377		
	BORE DIA. WORN MAX.	0.640	0.953	1.395	1.770	1.395	1.645	1.775	1.775		1.345		
1/16 OVERSIZED PINS	HINGE PIN SIDE												
	HINGE PIN PART. NO.	28753-06	29333-06		39239-06	24181-06	200364-06	55311-06	70180-06		10143783-002		
	TOTAL CLEARANCE "A"	0.025	0.025		0.035	0.035	0.040	0.045	0.045		0.030		
	HINGE PIN MIN. DIA. NEW	1.059	1.308		2.056	1.807	2.432	2.931	2.931		1.558		
	MAX. BORE DIA. NEW	1.065	1.315		2.065	1.815	2.440	2.940	2.940		1.565		
	BORE DIA. WORN MAX.	1.078	1.328		2.083	1.833	2.463	2.963	2.963		1.583		
	LATCH PIN SIDE												
	LATCH PIN PART. NO.	28757-06		24182-06		24182-06	200365-06	55312-06	55312-06		10143789-002		
	TOTAL CLEARANCE "B"	0.025		0.030		0.035	0.035	0.045	0.045		0.030		
	LATCH PIN MIN. DIA. NEW	0.684		1.432		1.432	1.683	1.807	1.807		1.433		
	MAX. BORE DIA. NEW	0.690		1.440		1.440	1.690	1.814	1.814		1.440		
	BORE DIA. WORN MAX.	0.703		1.458		1.458	1.708	1.837	1.837		1.458		
1/8 OVERSIZED PINS	HINGE PIN SIDE												
	HINGE PIN PART. NO.		29333-12		39239-12	24181-12	200364-12	55311-12	70180-12				
	TOTAL CLEARANCE "A"		0.025		0.035	0.035	0.040	0.045	0.045				
	HINGE PIN MIN. DIA. NEW		1.370		2.119	1.870	2.494	2.994	2.994				
	MAX. BORE DIA. NEW		1.377		2.127	1.878	2.502	3.002	3.002				
	BORE DIA. WORN MAX.		1.390		2.145	1.895	2.525	3.025	3.025				
	LATCH PIN SIDE												
	LATCH PIN PART. NO.						200365-12	55312-12	55312-12				
	TOTAL CLEARANCE "B"						0.035	0.045	0.045				
	LATCH PIN MIN. DIA. NEW						1.745	1.870	1.870				
	MAX. BORE DIA. NEW						1.752	1.877	1.877				
	BORE DIA. WORN MAX.						1.770	1.900	1.900				
EARS	DIMENSION "D" MIN.	1.438	2.188	3.31	3.625	3.25	3.80	3.625	3.625		3.625		
	MEASURE POINT DIM "D" *	4.00	5.25	6.50	8.688	8.50	9.375	11.063	11.063		6.50		
	"R" *	1.50	1.50	1.50	2.00	1.50	1.625	2.00	2.00		1.50		

* PLACE WHERE "D" IS TO BE MEASURED (SEE WD 060 SH 2 OF 2).

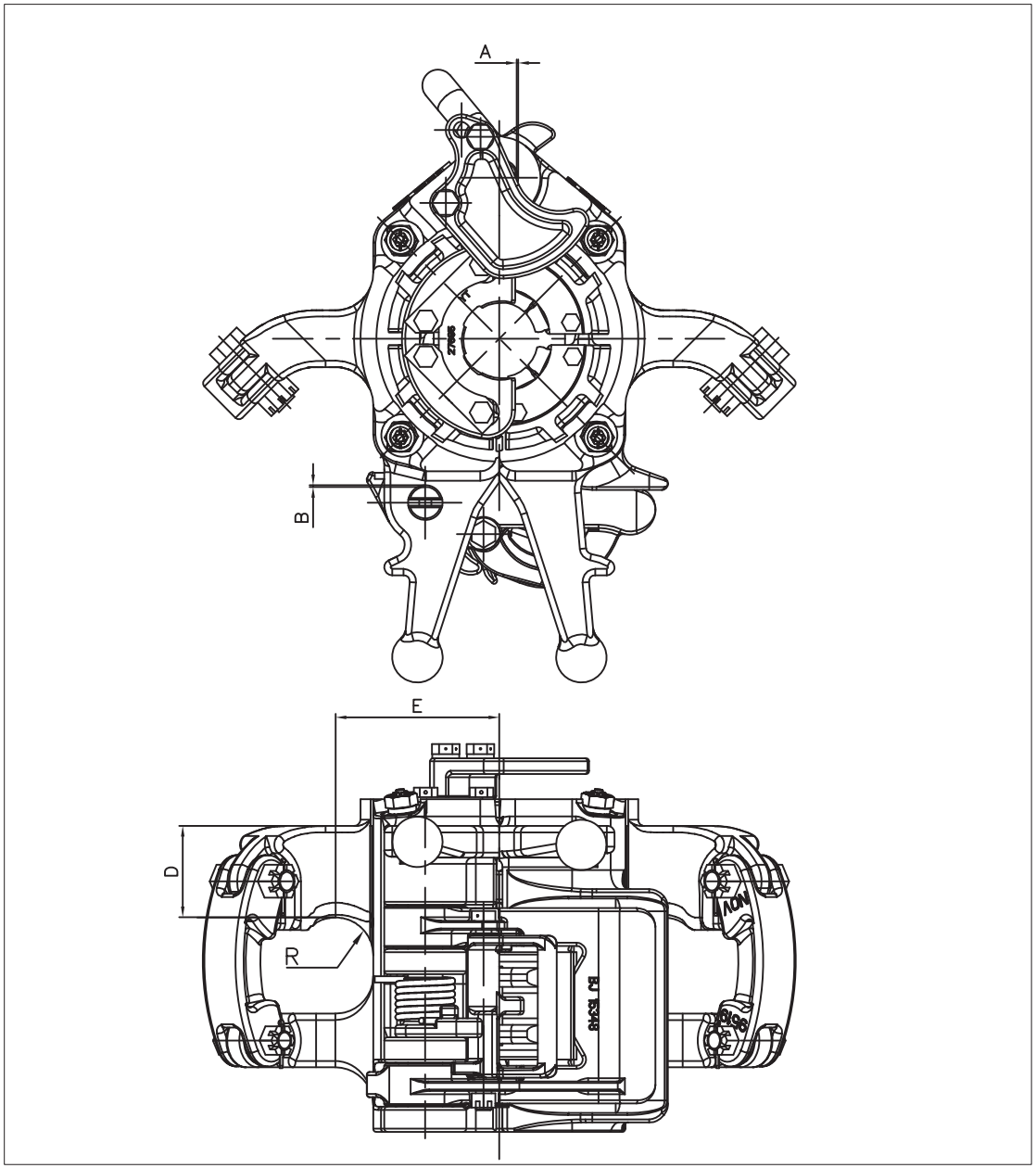

ORACLE PART NUMBER	10114191		
LEGACY PART NUMBER	50006582	REFERENCE ONLY	
MATERIAL	—		
SURF. FINISH/ PAINT SPEC	—	COLOR	
WEIGHT	LBS/		KG
CREATED BY	R.J.V.		
CREATED ON	10-16-92		
REVISED BY	R. Hommes		
REVISED ON	14-04-15		
TC-ECR	00035886		

REV. INF E

UNLESS OTHERWISE SPECIFIED TOLERANCES (PER ANSI Y 14.5)
3 PLACE DECIMAL .XXX ± .010
2 PLACE DECIMAL .XX ± .03
1 PLACE DECIMAL .X ± .1
ANGLES ± .5 DEGREE
BREAK SHARP CORNERS .010±.005
MACHINED SURFACES 250√
TORCHCUT SURFACES 1000√
ALL WELD SYMBOLS ACC. TO ISO
ALL WELD DIMENSIONS ARE Z DIM'S

NATIONAL OILWELL VARCO

DO NOT SCALE DOCUMENT

THIS DOCUMENT IS TEAMCENTER CONTROLLED

SCALE -

UNITS INCH (MM)

PROJ.

TITLE
WEAR DATA FOR SLIP TYPE ELEV.

SIZE A3

DRAWING NO. WD-060

SHEET 2 OF 2

DESCRIPTION	ØPIN NEW MIN.	ØPIN WORN MIN.	ØBORE NEW MAX.	ØBORE WORN MAX.	PARTNUMBER PIN REPLACEMENT KIT
WEAR DATA PIN IN BODY SJX & DSJX	1.116"	1.111"	1.127"	1.141"	10850208-001
WEAR DATA PIN, 1/16" OVERSIZE, IN BODY SJX & DSJX	1.179"	1.174"	1.190"	1.204"	10850208-002
WEAR DATA PIN, 1/8" OVERSIZE, IN BODY SJX & DSJX	1.241"	1.236"	1.252"	1.266"	10850208-003

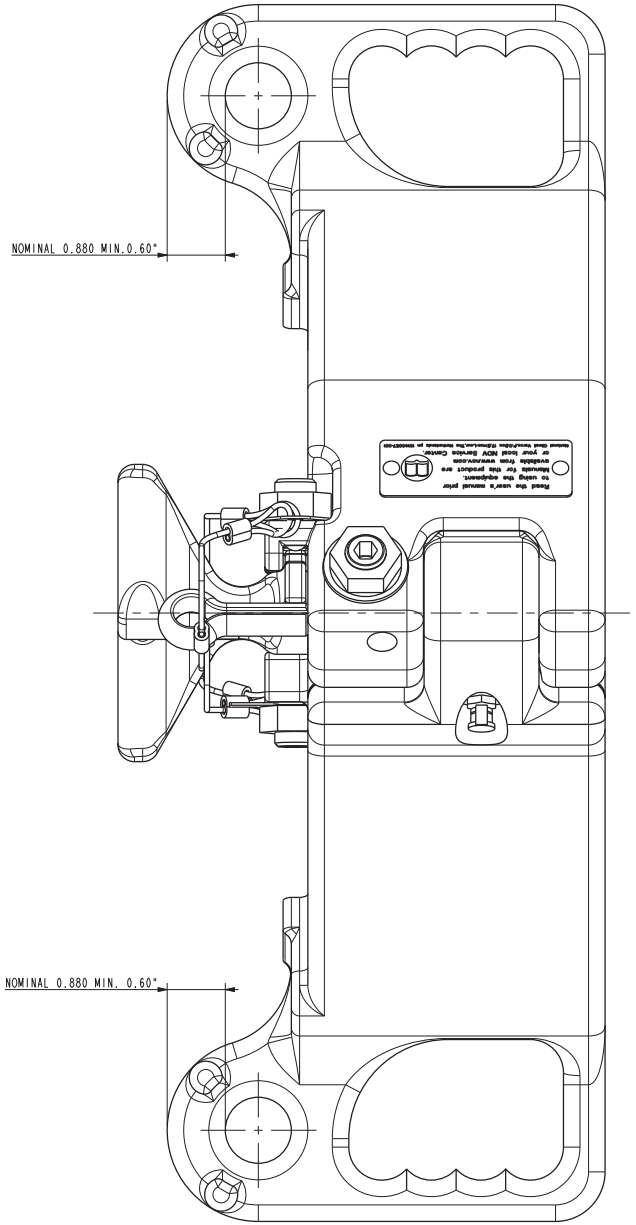

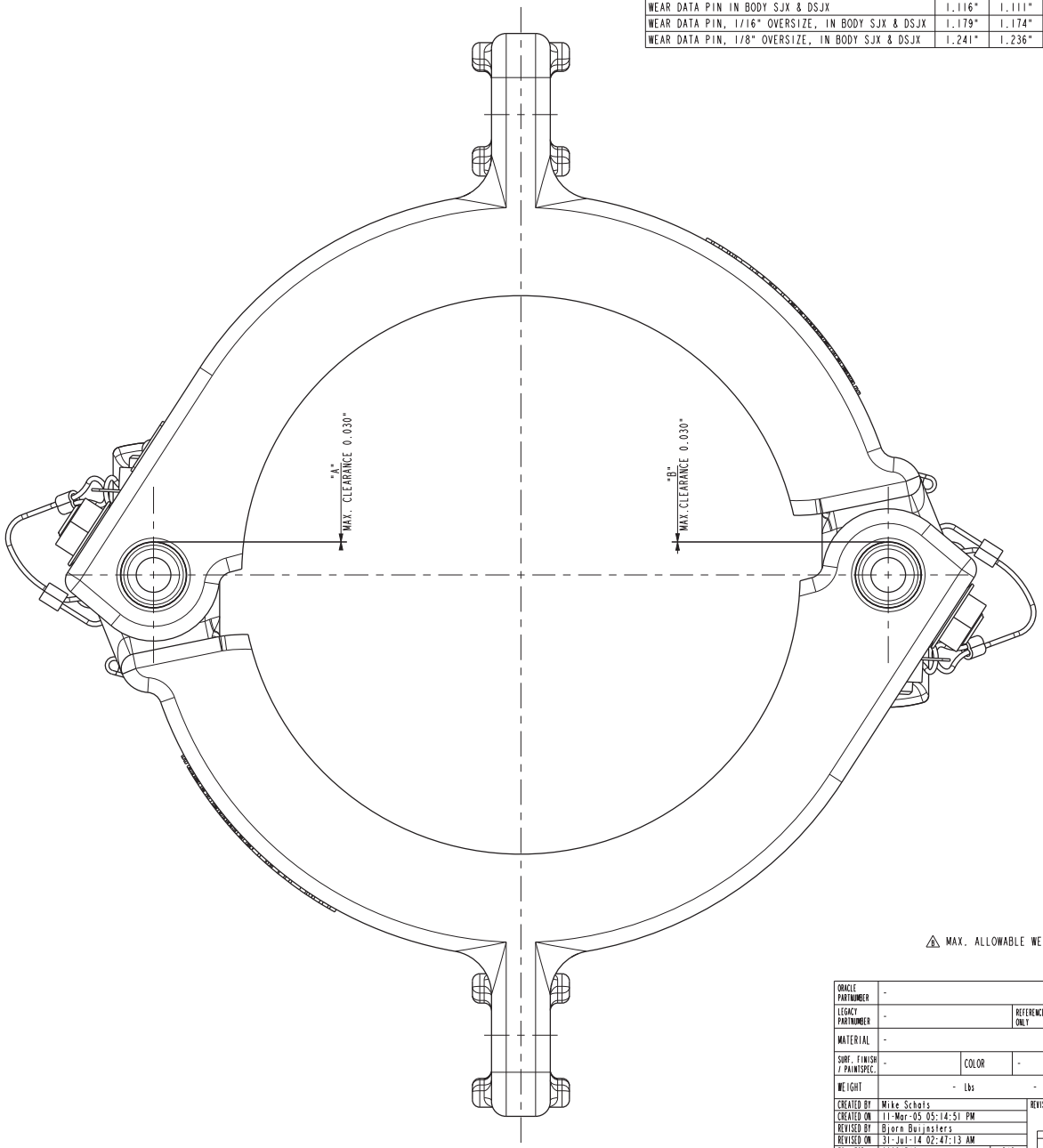

MAX. ALLOWABLE WEAR TO MAINTAIN 100% RATING.

ORACLE PARTNUMBER	-		
LEGACY PARTNUMBER	-	REFERENCE ONLY	
MATERIAL	-		
SURF. FINISH / PAINTSPEC.	-	COLOR	-
WEIGHT	- Lbs		- kg
CREATED BY	Mike Schats	REVISION	
CREATED ON	11-Mar-05 05:14:51 PM		
REVISED BY	Bjorn Buijnsters		
REVISED ON	31-Jul-14 02:47:13 AM		B
TC - ECR	00024546	DAD	

UNLESS OTHERWISE SPECIFIED
TOLERANCES (PER ANSI Y 14.5)
3 PLACE DECIMAL .XXX ± .010
2 PLACE DECIMAL .XX ± .03
1 PLACE DECIMAL .X ± .1
ANGLES ± .5 DEGREE
BREAK SHARP CORNERS .010 ± .005
MACHINED SURFACES 250
TORCHCUT SURFACES 1000
ALL WELD SYMBOLS ACC. TO ISO
ALL WELD DIMENSIONS ARE 2 DIM'S

DO NOT SCALE DOCUMENT
THIS DOCUMENT IS NOV TEAMCENTER CONTROLLED

NATIONAL OILWELL VARCO

SCALE 1:1
PROJ.
UNITS INCH (mm)

TITLE
Wear data SJX & DSJX Elevators

SIZE D
DRAWING NO. WD-120
SHEET 1 OF 1

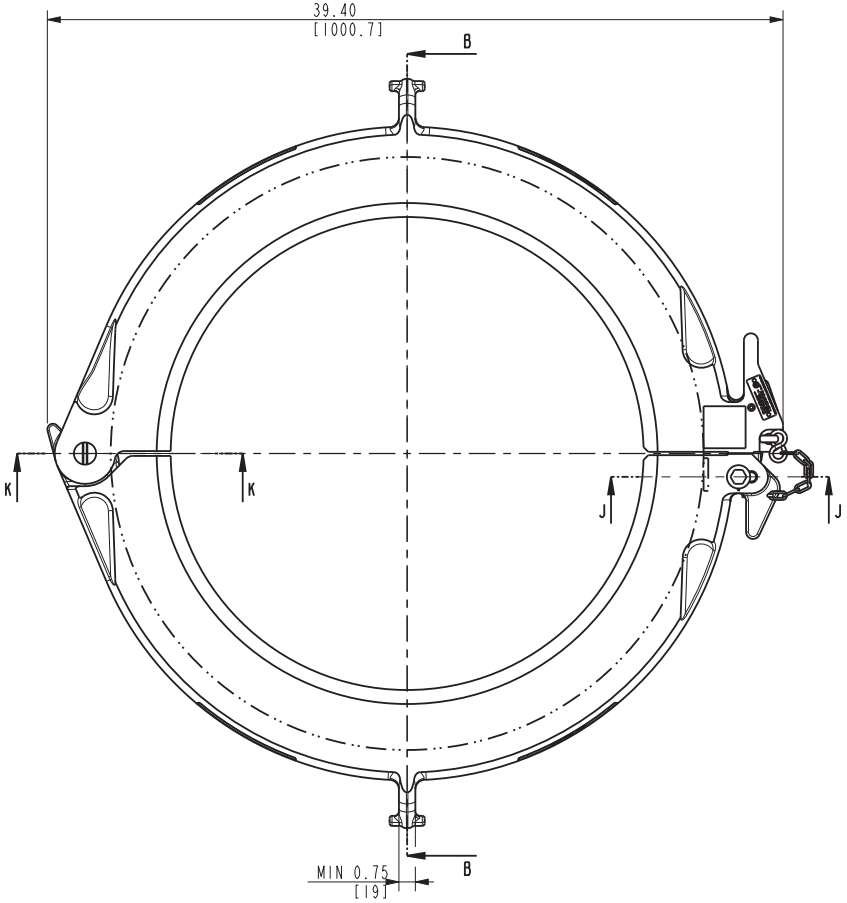

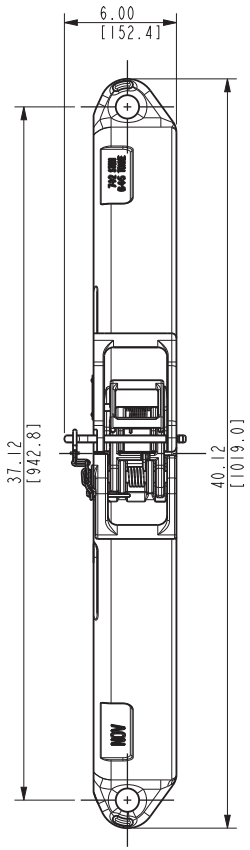

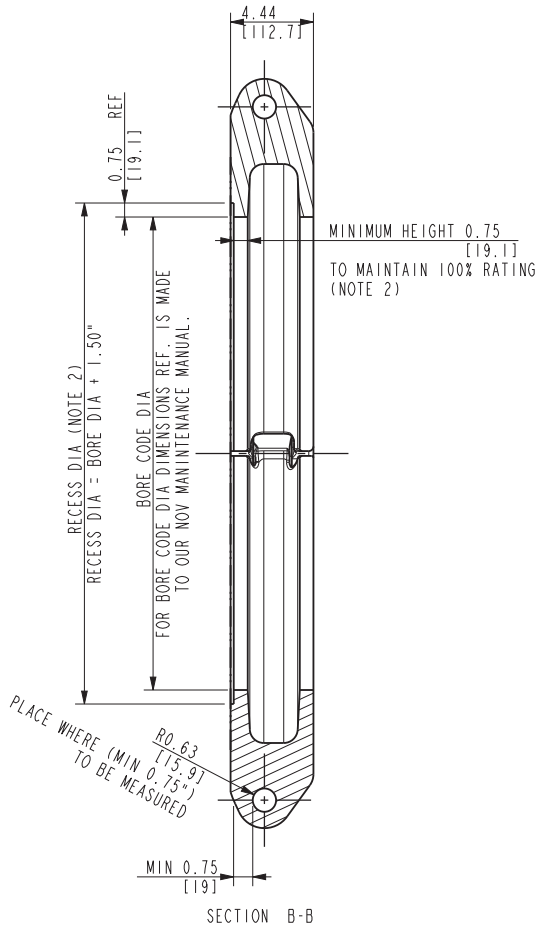

SECTION B-B

*NOT= NOT POSSIBLE BECAUSE OF SPRING

ORACLE PART NUMBER	LEGACY PART NUMBER	OVER SIZE	DIM 'D' ["]	HOLE DIA 'E' ["]	HOLE DIA 'E' WORN ["]	TOTAL MAX CLEARANCE 'F'
10148047-001	BJ33035	-	0.623-0.622	0.627-0.625	0.640	0.025
10148047-002	BJ33035-06	1/16"	0.686-0.685	0.690-0.688	0.703	0.025
*NOT	*NOT	1/8"	*NOT	*NOT	*NOT	*NOT

NOTES:
1) SPARE PARTS FOR ONE YEAR OPERATION: 11409404-002. 02
2) MAX COLAR WEAR DATA TO MAINTAIN 100% RATING.
100% RATING IS: 7.5 STON = 6.4/5 TONNE.

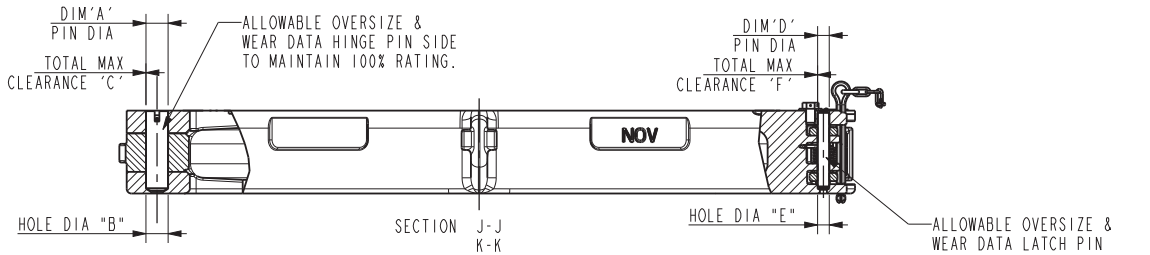

ORACLE PART NUMBER	LEGACY PART NUMBER	OVER SIZE	DIM 'A' ["]	HOLE DIA 'B' ["]	HOLE DIA 'B' WORN ["]	TOTAL MAX CLEARANCE 'C'
10137240-001	200051	-	1.184-1.185	1.188-1.190	1.198	0.015
10137240-002	200051-06	1/16"	1.245-1.247	1.250-1.253	1.260	0.015
10137240-003	200051-12	1/8"	1.308-1.310	1.313-1.315	1.323	0.015

ORACLE PARTNUMBER	10876017-		
LEGACY PARTNUMBER	N/A	REFERENCE ONLY	
MATERIAL			
SURF. FINISH / PAINTSPEC.	-	COLOR	-
WEIGHT	404.0 Lbs	183.3 kg	
CREATED BY	Sonneveld, Leon	REVISION	
CREATED ON	13-May-15 11:19:51 AM		
REVISED BY	Sonneveld, Leon		
REVISED ON	13-May-15 11:27:23 AM	02	
TC - ECR	00019653	INF	

UNLESS OTHERWISE SPECIFIED
TOLERANCES (PER ANSI Y 14.5)
3 PLACE DECIMAL .XXX ± .010
2 PLACE DECIMAL .XX ± .03
1 PLACE DECIMAL .X ± .1
ANGLES ± .5 DEGREE
BREAK SHARP CORNERS .010 ± .005
MACHINED SURFACES 250
TORCHCUT SURFACES 1000
ALL WELD SYMBOLS ACC. TO ISO
ALL WELD DIMENSIONS ARE Z DIM'S

NATIONAL OILWELL VARCO

DO NOT SCALE DOCUMENT
SCALE 1:5
PROJ.
THIS DOCUMENT IS NOV TEAMCENTER CONTROLLED
UNITS INCH (mm)

TITLE
DD&WD SJL#7 10876017-,24.5/8-30", 7.5 sTon.

SIZE C
DRAWING NO. 11021120-INF
SHEET 1 OF 1

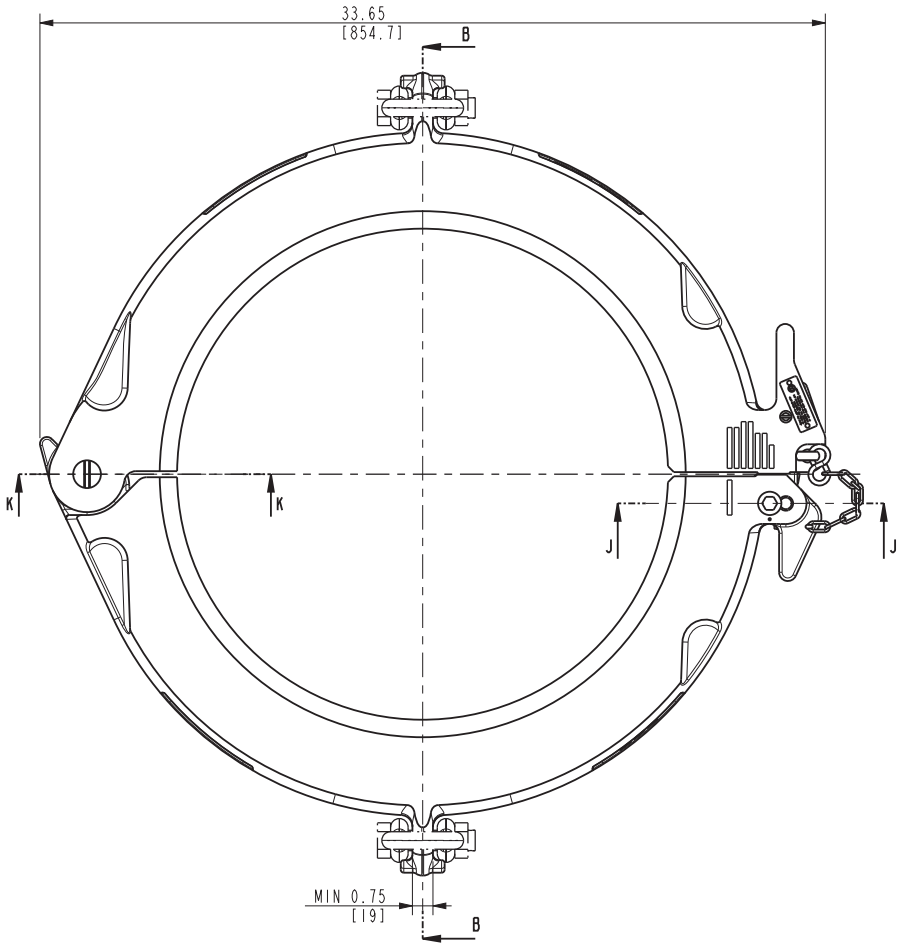

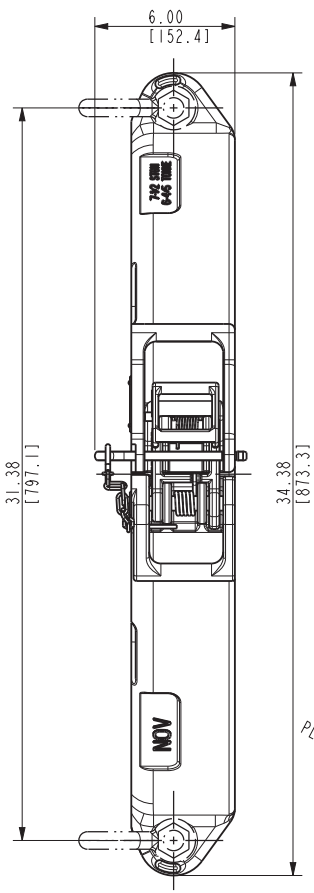

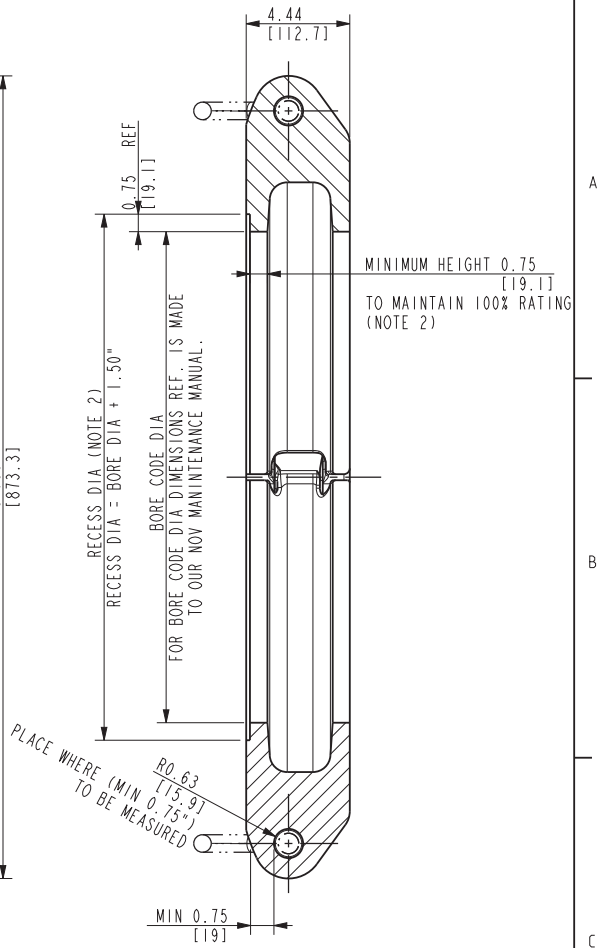

SECTION B-B

*NOT= NOT POSSIBLE BECAUSE OF SPRING

ORACLE PART NUMBER	LEGACY PART NUMBER	OVER SIZE	DIM 'D' ["]	HOLE DIA 'E' ["]	HOLE DIA 'E' WORN ["]	TOTAL MAX CLEARANCE 'F'
10148047-001	BJ33035	-	0.623-0.622	0.627-0.625	0.640	0.025
10148047-002	BJ33035-06	1/16"	0.686-0.685	0.690-0.688	0.703	0.025
*NOT	*NOT	1/8"	*NOT	*NOT	*NOT	*NOT

NOTES:
1) RECOMMENDED SPARE PARTS 11409404-002. 03
2) MAX COLLAR WEAR DATA TO MAINTAIN 100% RATING.
100% RATING IS: 7.5 STON = 6.4/5 TONNE.

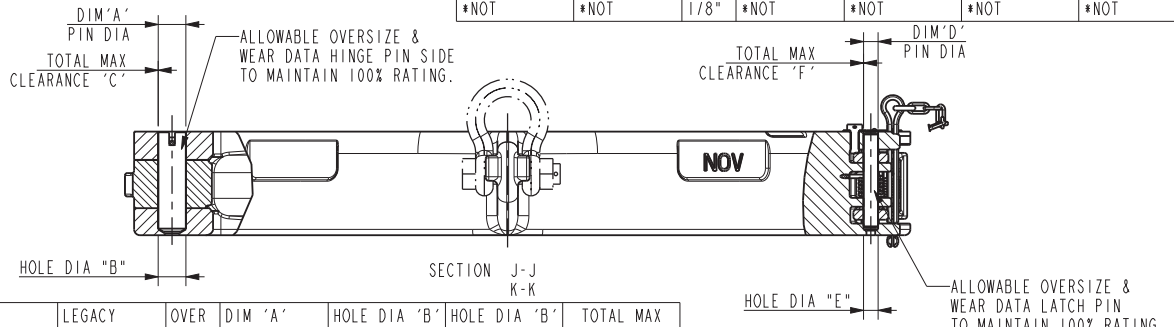

ORACLE PART NUMBER	LEGACY PART NUMBER	OVER SIZE	DIM 'A' ["]	HOLE DIA 'B' ["]	HOLE DIA 'B' WORN ["]	TOTAL MAX CLEARANCE 'C'
10137240-001	200051	-	1.184-1.185	1.188-1.190	1.198	0.015
10137240-002	200051-06	1/16"	1.245-1.247	1.250-1.253	1.260	0.015
10137240-003	200051-12	1/8"	1.308-1.310	1.313-1.315	1.323	0.015

ORACLE PARTNUMBER	10872064-		
LEGACY PARTNUMBER	N/A	REFERENCE ONLY	
MATERIAL			
SURF. FINISH / PAINTSPEC.	-	COLOR	-
WEIGHT	313.6 Lbs	142.2 kg	
CREATED BY	Sonneveld, Leon	REVISION	
CREATED ON	13-May-15 11:08:37 AM		
REVISED BY	Sonneveld, Leon		
REVISED ON	13-May-15 11:15:21 AM	03	
TC - ECR	00026938	INF	

UNLESS OTHERWISE SPECIFIED
TOLERANCES (PER ANSI Y 14.5)
3 PLACE DECIMAL .XXX ± .010
2 PLACE DECIMAL .XX ± .03
1 PLACE DECIMAL .X ± .1
ANGLES ± .5 DEGREE
BREAK SHARP CORNERS .010 ± .005
MACHINED SURFACES 250
TORCHCUT SURFACES 1000
ALL WELD SYMBOLS ACC. TO ISO
ALL WELD DIMENSIONS ARE Z DIM'S

NATIONAL OILWELL VARCO

DO NOT SCALE DOCUMENT
SCALE 1:4
PROJ.
THIS DOCUMENT IS NOV TEAMCENTER CONTROLLED
UNITS INCH (mm)

TITLE
DD&WD SJL#6 10872064-,20.5/8-24.1/2", 7.5 sTon.

SIZE C
DRAWING NO. 11020414-INF
SHEET 1 OF 1

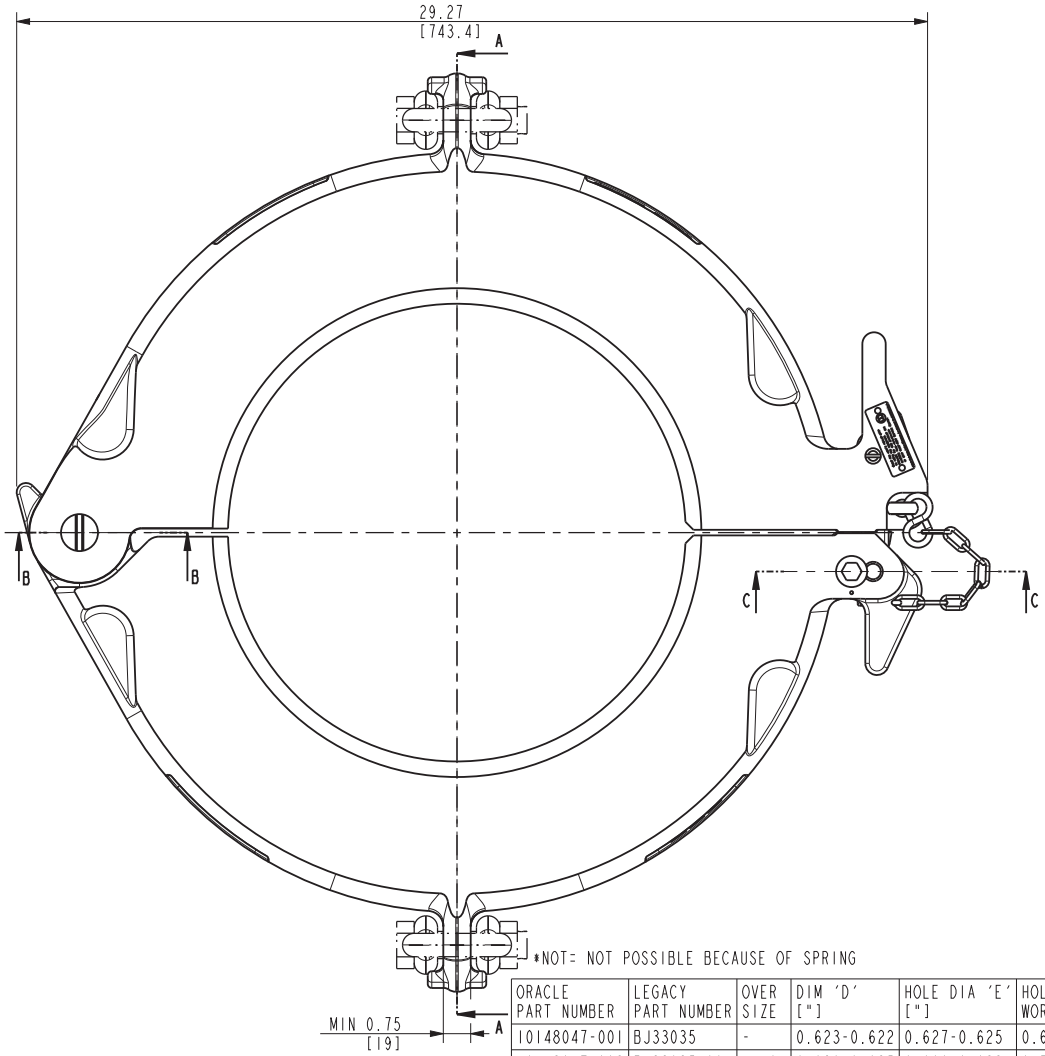

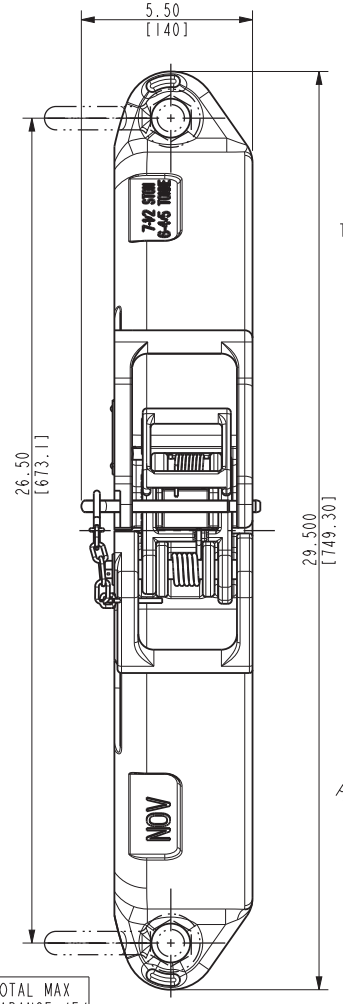

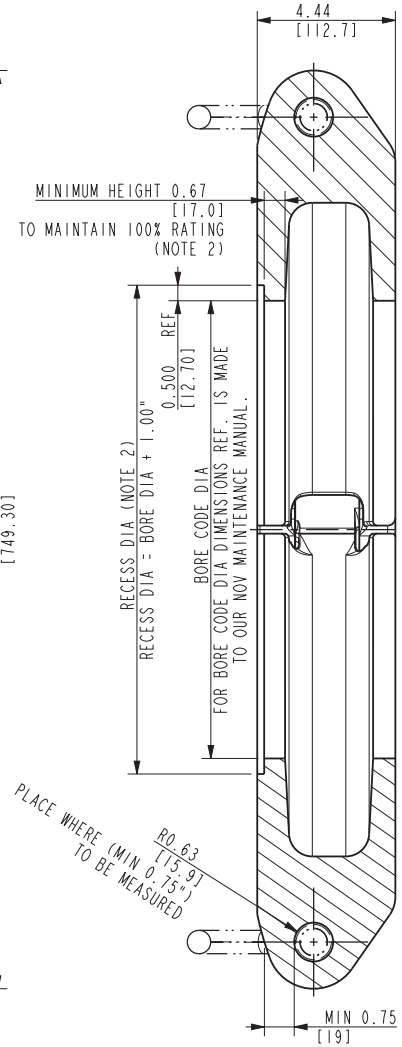

SECTION A-A

*NOT= NOT POSSIBLE BECAUSE OF SPRING

ORACLE PART NUMBER	LEGACY PART NUMBER	OVER SIZE	DIM 'D' ["]	HOLE DIA 'E' ["]	HOLE DIA 'E' WORN ["]	TOTAL MAX CLEARANCE 'F'
10148047-001	BJ33035	-	0.623-0.622	0.627-0.625	0.640	0.025
10148047-002	BJ33035-06	1/16"	0.686-0.685	0.690-0.688	0.703	0.025
*NOT	*NOT	1/8"	*NOT	*NOT	*NOT	*NOT

NOTES:
1) RECOMMENDED OPERATIONAL SPARES: 11409404-002 03
2) MAX COLLAR WEAR DATA TO MAINTAIN 100% RATING.
100% RATING IS: 7.5 STON = 6.4/5 TONNE.

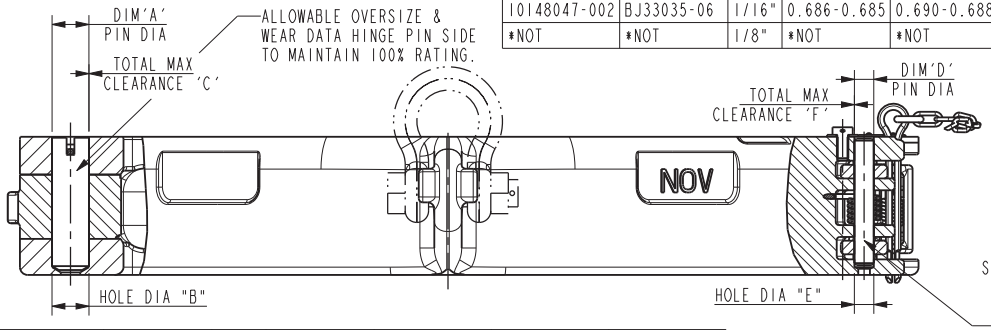

SECTION B-B
C-C

ORACLE PART NUMBER	LEGACY PART NUMBER	OVER SIZE	DIM 'A' ["]	HOLE DIA 'B' ["]	HOLE DIA 'B' WORN ["]	TOTAL MAX CLEARANCE 'C'
10137240-001	200051	-	1.184-1.185	1.188-1.190	1.198	0.015
10137240-002	200051-06	1/16"	1.245-1.247	1.250-1.253	1.260	0.015
10137240-003	200051-12	1/8"	1.308-1.310	1.313-1.315	1.323	0.015

ORACLE PARTNUMBER	10837790-		
LEGACY PARTNUMBER	N/A	REFERENCE ONLY	
MATERIAL			
SURF. FINISH / PAINTSPEC.	-	COLOR	-
WEIGHT	133.7 Lbs	60.7 kg	
CREATED BY	Sonneveld, Leon	REVISION	
CREATED ON	13-May-15 10:52:55 AM		
REVISED BY	Sonneveld, Leon		
REVISED ON	13-May-15 10:59:14 AM	03	
TC - ECR	00026938		

UNLESS OTHERWISE SPECIFIED
TOLERANCES (PER ANSI Y 14.5)
3 PLACE DECIMAL .XXX ± .010
2 PLACE DECIMAL .XX ± .03
1 PLACE DECIMAL .X ± .1
ANGLES ± .5 DEGREE
BREAK SHARP CORNERS .010 ± .005
MACHINED SURFACES 250
TORCHCUT SURFACES 1000
ALL WELD SYMBOLS ACC. TO ISO
ALL WELD DIMENSIONS ARE Z DIM'S

NATIONAL OILWELL VARCO

DO NOT SCALE DOCUMENT
SCALE 2:5
PROJ.
THIS DOCUMENT IS NOV TEAMCENTER CONTROLLED
UNITS INCH (mm)

TITLE
DD&WD for SJL#5 10837790-,14.1/8-20.1/2", 7.5 sTon.

SIZE C
DRAWING NO. 10968864-INF
SHEET 1 OF 1

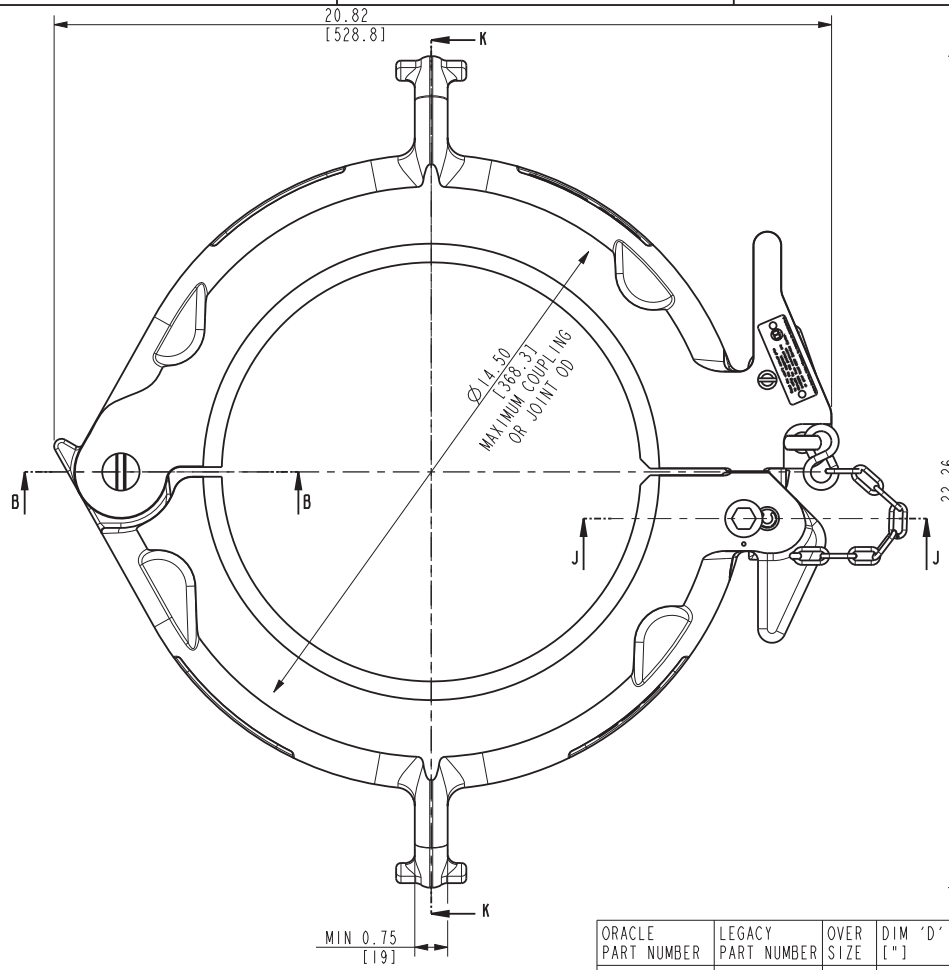

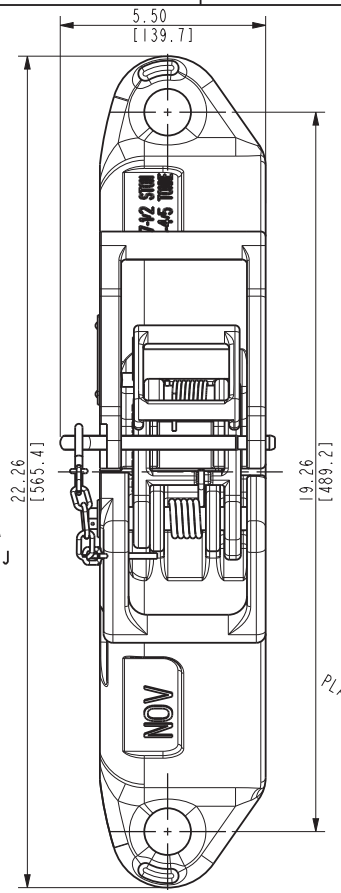

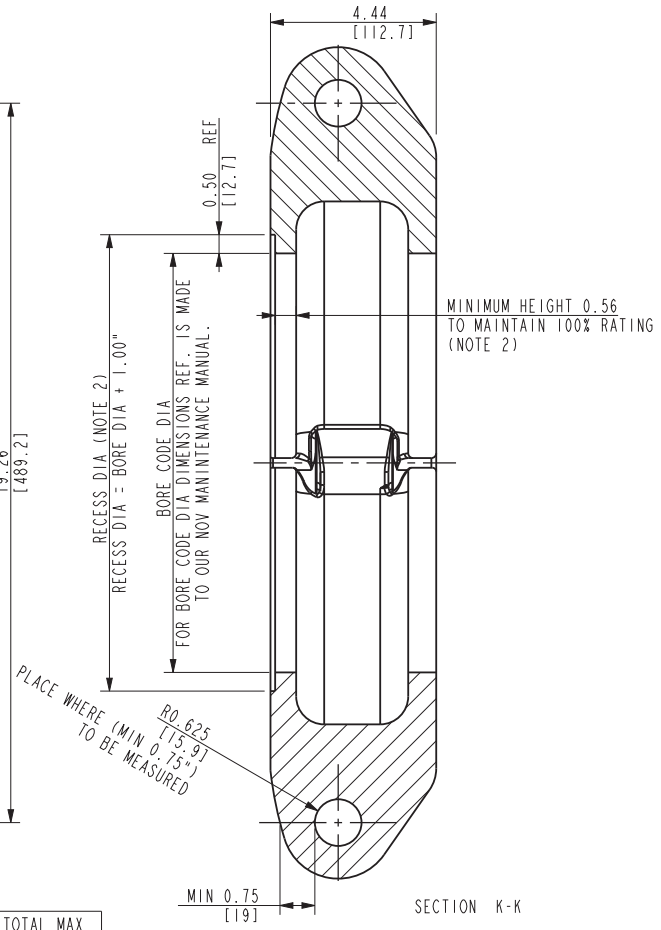

ORACLE PART NUMBER	LEGACY PART NUMBER	OVER SIZE	DIM 'D' ["]	HOLE DIA 'E' ["]	HOLE DIA 'E' WORN ["]	TOTAL MAX CLEARANCE 'F'
10148047-001	BJ33035	-	0.623-0.622	0.627-0.625	0.640	0.025
10148047-002	BJ33035-06	1/16"	0.686-0.685	0.690-0.688	0.703	0.025
*NOT	*NOT	1/8"	*NOT	*NOT	*NOT	*NOT

*NOT= NOT POSSIBLE BECAUSE OF SPRING

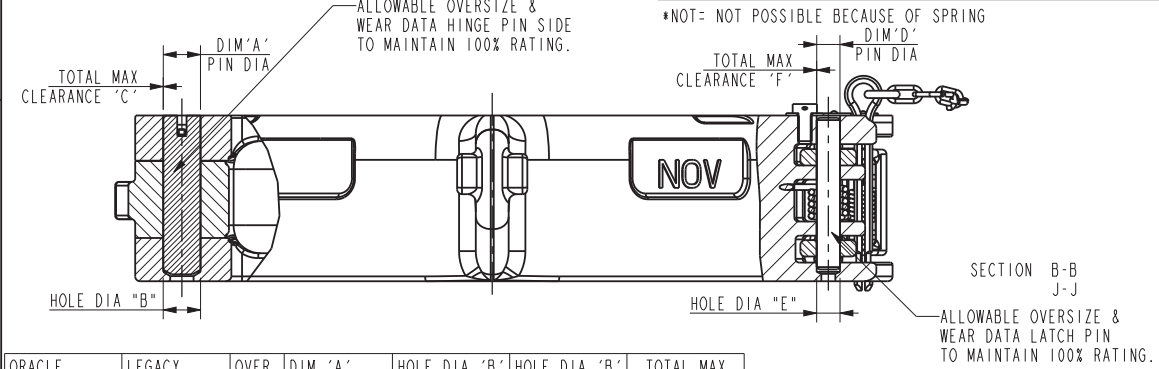

SECTION B-B
J-J

ORACLE PART NUMBER	LEGACY PART NUMBER	OVER SIZE	DIM 'A' ["]	HOLE DIA 'B' ["]	HOLE DIA 'B' WORN ["]	TOTAL MAX CLEARANCE 'C'
10137236-001	200050	-	0.998-0.996	1.001-1.000	1.012	0.020
10137236-002	200050-06	1/16"	1.060-1.059	1.064-1.063	1.075	0.020
10137236-003	200050-12	1/8"	1.123-1.121	1.126-1.125	1.137	0.020

NOTES:
1) RECOMMENDED OPERATIONAL SPARES: 11409404-001 03
2) MAX COLLAR WEAR DATA TO MAINTAIN 100% RATING.
100% RATING IS: 7.5 STON = 6.4/5 TONNE
3) FOR PART NUMBERS SEE LATEST REVISION OF ASS'Y DRAWING: 10864561-ASM.

ORACLE PARTNUMBER	10864561-		
LEGACY PARTNUMBER	N/A	REFERENCE ONLY	
MATERIAL			
SURF. FINISH / PAINTSPEC.	-	COLOR	-
WEIGHT	127.0 Lbs	57.6 kg	
CREATED BY	Sonneveld, Leon	REVISION	
CREATED ON	13-May-15 10:30:34 AM		
REVISED BY	Sonneveld, Leon		
REVISED ON	13-May-15 10:48:11 AM	03	
TC - ECR	00026938	INF	

UNLESS OTHERWISE SPECIFIED
TOLERANCES (PER ANSI Y 14.5)
3 PLACE DECIMAL .XXX ± .010
2 PLACE DECIMAL .XX ± .03
1 PLACE DECIMAL .X ± .1
ANGLES ± .5 DEGREE
BREAK SHARP CORNERS .010 ± .005
MACHINED SURFACES 250
TORCHCUT SURFACES 1000
ALL WELD SYMBOLS ACC. TO ISO
ALL WELD DIMENSIONS ARE Z DIM'S

NATIONAL OILWELL VARCO

DO NOT SCALE DOCUMENT
SCALE 2:5
PROJ.
THIS DOCUMENT IS NOV TEAMCENTER CONTROLLED
UNITS INCH (mm)

TITLE
DD & WEAR DATA FOR SJ#4L 10864561-, 11.1/8-14",7.5 STON

SIZE C
DRAWING NO. 10878725-INF
SHEET 1 OF 1

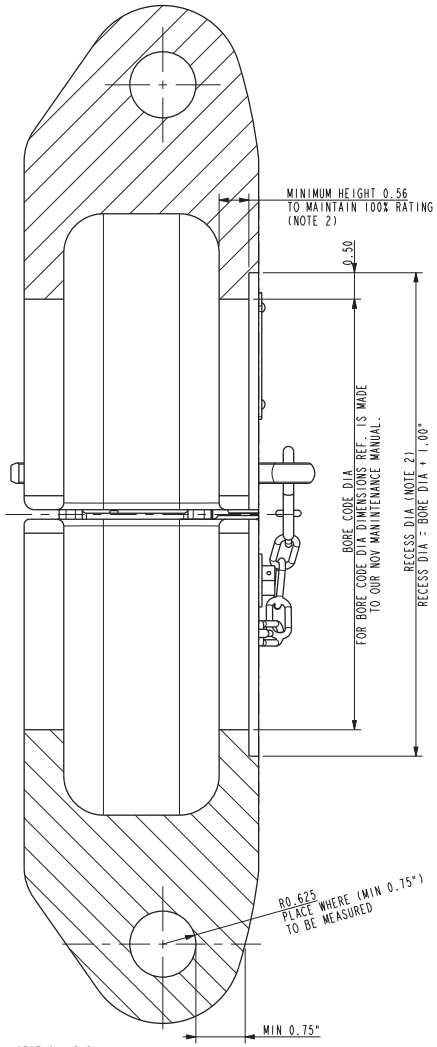

SECTION D-D

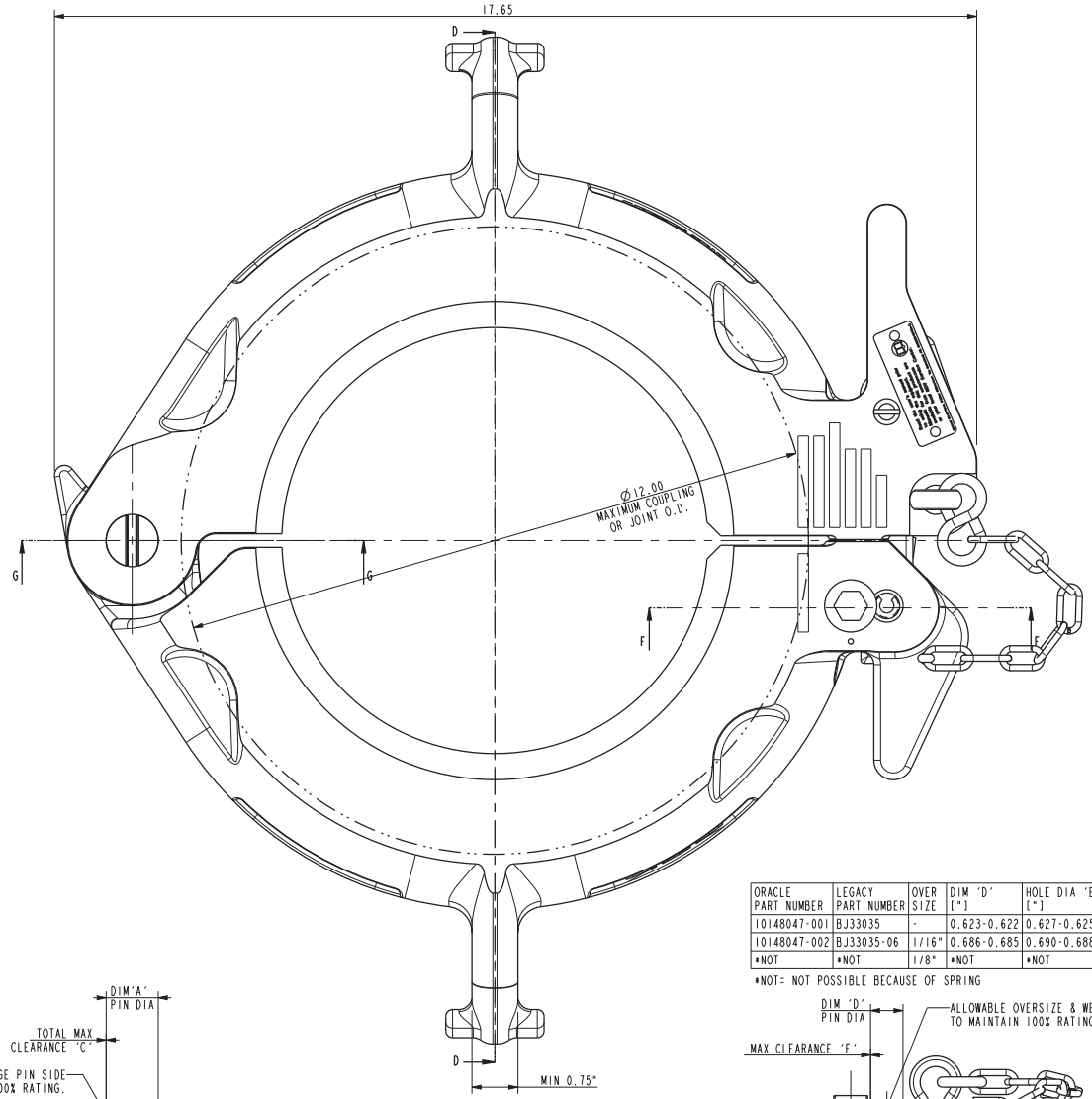

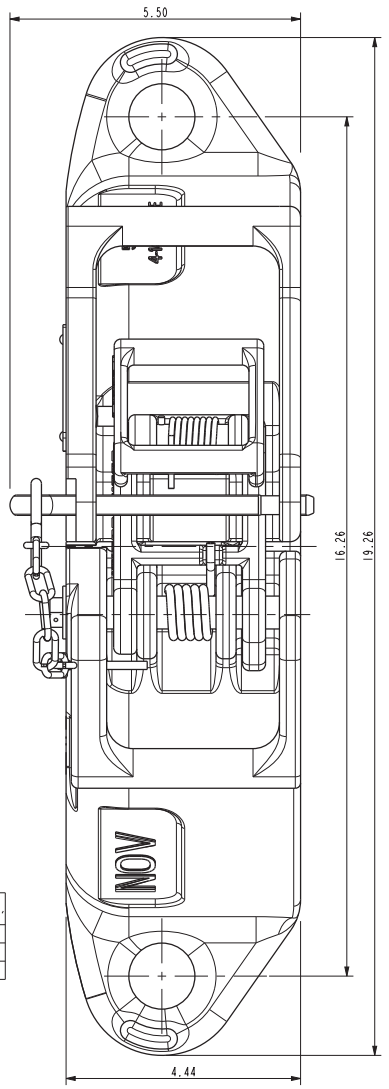

ORACLE PART NUMBER	LEGACY PART NUMBER	OVER SIZE	DIM 'D' ["]	HOLE DIA 'E' ["]	HOLE DIA 'E' WORN ["]	TOTAL MAX CLEARANCE 'F'
10148047-001	BJ33035	-	0.623-0.622	0.627-0.625	0.640	0.025
10148047-002	BJ33035-06	1/16"	0.686-0.685	0.690-0.688	0.703	0.025
*NOT	*NOT	1/8"	*NOT	*NOT	*NOT	*NOT

*NOT= NOT POSSIBLE BECAUSE OF SPRING

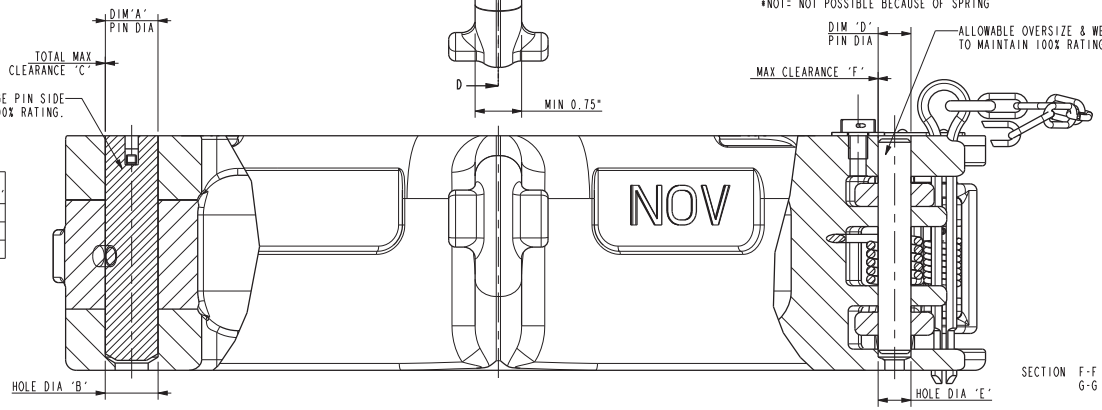

SECTION F-F
G-G

ORACLE PART NUMBER	LEGACY PART NUMBER	OVER SIZE	DIM 'A' ["]	HOLE DIA 'B' ["]	HOLE DIA 'B' WORN ["]	TOTAL MAX CLEARANCE 'C'
10137236-001	200050	-	0.998-0.996	1.001-1.000	1.012	0.020
10137236-002	200050-06	1/16"	1.060-1.059	1.064-1.063	1.075	0.020
10137236-003	200050-12	1/8"	1.123-1.121	1.126-1.125	1.137	0.020

NOTES:
1) RECOMMENDED OPERATIONAL SPARE PARTS: 11409404-001. (A)
2) MAX COLAR WEAR DATA TO MAINTAIN 100% RATING.
100% RATING IS: 5 STON = 4.1/2 TONNE
3) FOR PART NUMBERS SEE LATEST REVISION OF ASS'Y DRAWING: 70502.

ORACLE PARTNUMBER	10046192- (A)		
LEGACY PARTNUMBER	70502	REFERENCE ONLY	
MATERIAL			
SURF. FINISH / PAINTSPEC.	-	COLOR	-
WEIGHT	107.6 Lbs	48.8 kg	
CREATED BY	Sonneveld, Leon	REVISION	
CREATED ON	13-May-15 09:22:00 AM		
REVISED BY	Sonneveld, Leon		
REVISED ON	20-May-15 05:08:49 PM		
TC - ECR	00026938	INF	B

UNLESS OTHERWISE SPECIFIED
TOLERANCES (PER ANSI Y 14.5)
3 PLACE DECIMAL .XXX ± .010
2 PLACE DECIMAL .XX ± .03
1 PLACE DECIMAL .X ± .1
ANGLES ± .5 DEGREE
BREAK SHARP CORNERS .010 ± .005
MACHINED SURFACES 250
TORCHCUT SURFACES 1000
ALL WELD SYMBOLS ACC. TO ISO
ALL WELD DIMENSIONS ARE 2 DIM'S

DO NOT SCALE DOCUMENT
SCALE 4:5
PROJ.
THIS DOCUMENT IS NOV TEAMCENTER CONTROLLED
UNITS INCH (mm)

NATIONAL OILWELL VARCO

TITLE
DD & Wear Data SJLH3, 7.7/8-11", 5sT

SIZE	DRAWING NO.	SHEET
D	10900385-INF	1 OF 1

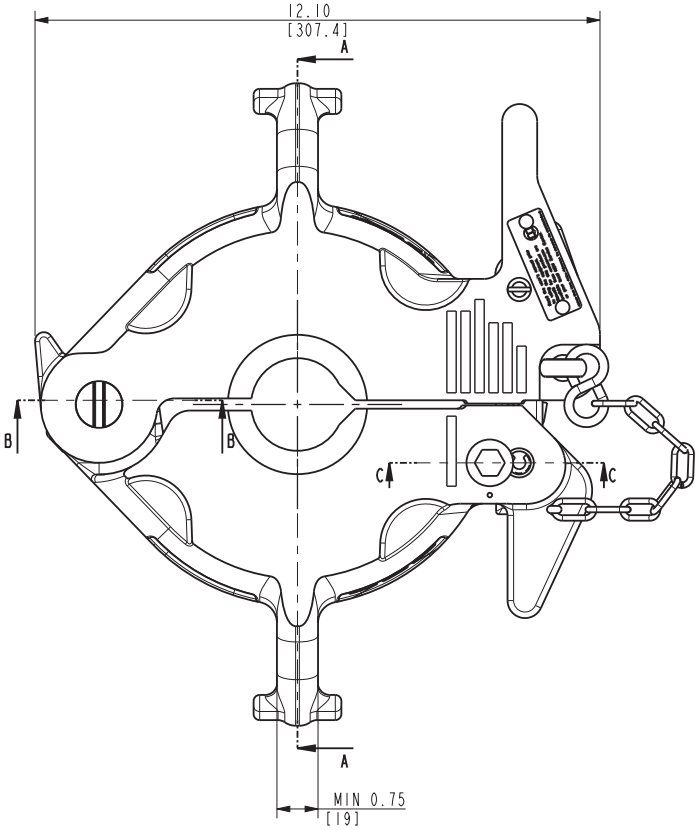

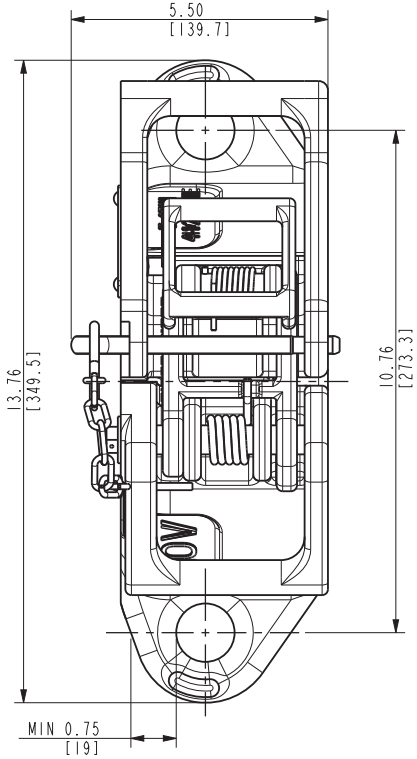

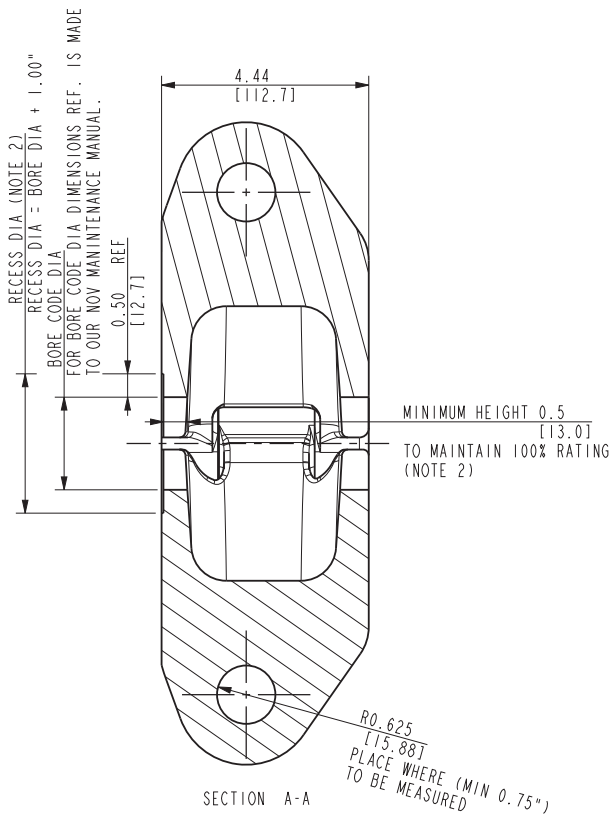

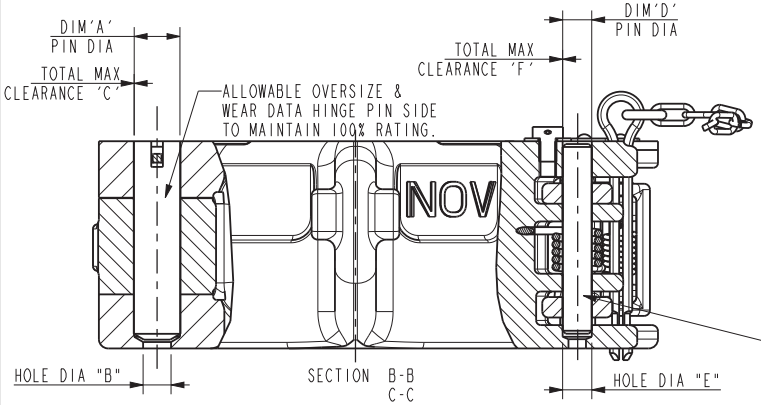

ORACLE PART NUMBER	LEGACY PART NUMBER	OVER SIZE	DIM 'D' ["]	HOLE DIA 'E' ["]	HOLE DIA 'E' WORN ["]	TOTAL MAX CLEARANCE 'F'
10148047-001	BJ33035	-	0.623-0.622	0.627-0.625	0.640	0.025
10148047-002	BJ33035-06	1/16"	0.686-0.685	0.690-0.688	0.703	0.025
*NOT	*NOT	1/8"	*NOT	*NOT	*NOT	*NOT

*NOT= NOT POSSIBLE BECAUSE OF SPRING

NOTES:
1) SPARE PARTS FOR ONE YEAR OPERATION: 11409404-001 02
2) MAX COLAR WEAR DATA TO MAINTAIN 100% RATING.
   100% RATING IS: 5 STON = 4.1/2 TONNE
3) FOR PART NUMBERS SEE LATEST REVISION OF ASS'Y DRAWING: 70499 or 70500.

ORACLE PART NUMBER	LEGACY PART NUMBER	OVER SIZE	DIM 'A' ["]	HOLE DIA 'B' ["]	HOLE DIA 'B' WORN ["]	TOTAL MAX CLEARANCE 'C'
10137236-001	200050	-	0.998-0.996	1.001-1.000	1.012	0.020
10137236-002	200050-06	1/16"	1.060-1.059	1.064-1.063	1.075	0.020
10137236-003	200050-12	1/8"	1.123-1.121	1.126-1.125	1.137	0.020

ORACLE PARTNUMBER	10146447-10722134-		
LEGACY PARTNUMBER	70499..../70500....	REFERENCE ONLY	
MATERIAL			
SURF. FINISH / PAINTSPEC.	-	COLOR	-
WEIGHT	63.0 Lbs	28.6 kg	
CREATED BY	Sonneveld, Leon	REVISION	
CREATED ON	12-May-15 03:24:02 PM		
REVISED BY	Sonneveld, Leon		
REVISED ON	13-May-15 09:31:45 AM	02	
TC - ECR	00022166	INF	

UNLESS OTHERWISE SPECIFIED
TOLERANCES (PER ANSI Y 14.5)
3 PLACE DECIMAL .XXX ± .010
2 PLACE DECIMAL .XX ± .03
1 PLACE DECIMAL .X ± .1
ANGLES ± .5 DEGREE
BREAK SHARP CORNERS .010 ± .005
MACHINED SURFACES 250
TORCHCUT SURFACES 1000
ALL WELD SYMBOLS ACC. TO ISO
ALL WELD DIMENSIONS ARE Z DIM'S

NATIONAL OILWELL VARCO

DO NOT SCALE DOCUMENT
SCALE 1:2
PROJ.
THIS DOCUMENT IS NOV TEAMCENTER CONTROLLED
UNITS INCH (mm)

TITLE
DD & WD SJL,10146447-810722134-,2.3/8-5.1/2", 5 STON

SIZE C | DRAWING NO. 10938145-INF | SHEET 1 OF 1

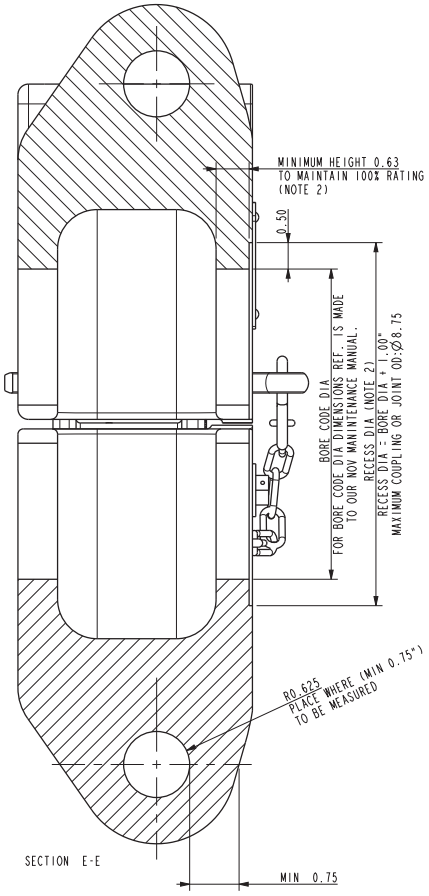

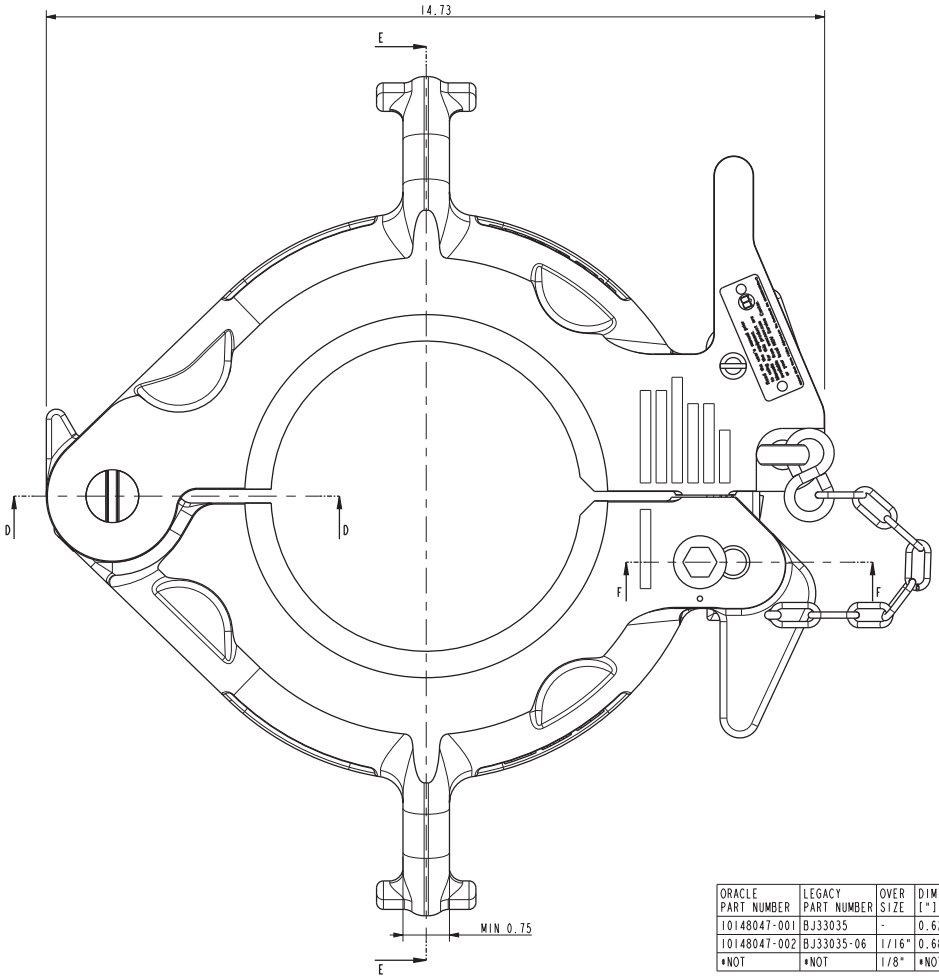

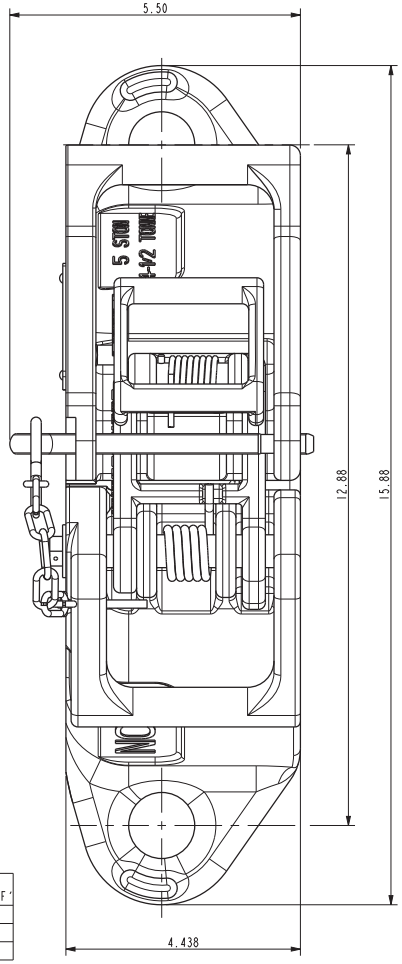

ORACLE PART NUMBER	LEGACY PART NUMBER	OVER SIZE	DIM 'D' ["]	HOLE DIA 'E' ["]	HOLE DIA 'E' WORN ["]	TOTAL MAX CLEARANCE 'F'
10148047-001	BJ33035	-	0.623-0.622	0.627-0.625	0.640	0.025
10148047-002	BJ33035-06	1/16"	0.686-0.685	0.690-0.688	0.703	0.025
*NOT	*NOT	1/8"	*NOT	*NOT	*NOT	*NOT

*NOT= NOT POSSIBLE BECAUSE OF SPRING

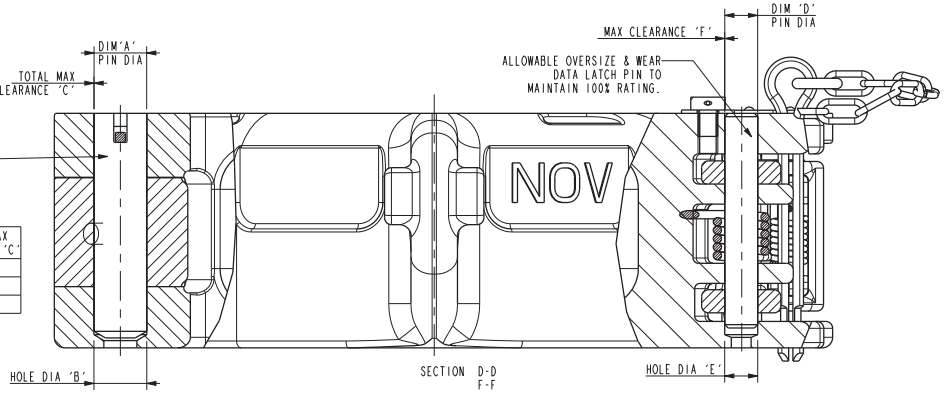

ORACLE PART NUMBER	LEGACY PART NUMBER	OVER SIZE	DIM 'A' ["]	HOLE DIA 'B' ["]	HOLE DIA 'B' WORN ["]	TOTAL MAX CLEARANCE 'C'
10137236-001	200050	-	0.998-0.996	1.001-1.000	1.012	0.020
10137236-002	200050-06	1/16"	1.060-1.059	1.064-1.063	1.075	0.020
10137236-003	200050-12	1/8"	1.123-1.121	1.126-1.125	1.137	0.020

NOTES:
1) RECOMMENDED OPERATIONAL SPARES: 11409404-001 △3
2) MAX COLAR WEAR DATA TO MAINTAIN 100% RATING.
100% RATING IS: 5 STON = 4.1/2 TONNE

ORACLE PARTNUMBER	10722134-...		
LEGACY PARTNUMBER	70501Y/Z...	REFERENCE ONLY	
MATERIAL			
SURF. FINISH / PAINTSPEC.	-	COLOR	-
WEIGHT	101.5 Lbs	46.1 kg	
CREATED BY	Sonneveld, Leon	REVISION	
CREATED ON	12-May-15 03:25:33 PM		
REVISED BY	Sonneveld, Leon		
REVISED ON	12-May-15 04:22:39 PM		
TC - ECR	00026938	INF	03

UNLESS OTHERWISE SPECIFIED
TOLERANCES (PER ANSI Y 14.5)
3 PLACE DECIMAL .XXX ± .010
2 PLACE DECIMAL .XX ± .03
1 PLACE DECIMAL .X ± .1
ANGLES ± .5 DEGREE
BREAK SHARP CORNERS .010 ± .005
MACHINED SURFACES 250
TORCHCUT SURFACES 1000
ALL WELD SYMBOLS ACC. TO ISO
ALL WELD DIMENSIONS ARE Z DIM'S

DO NOT SCALE DOCUMENT
THIS DOCUMENT IS NOV TEAMCENTER CONTROLLED

NATIONAL OILWELL VARCO

SCALE 4:5
PROJ.
UNITS INCH (mm)

TITLE	SIZE	DRAWING NO.	SHEET OF
DD & Wear Date SJL#2,5.5/8-7.3/4	D	10965104-INF	1 1

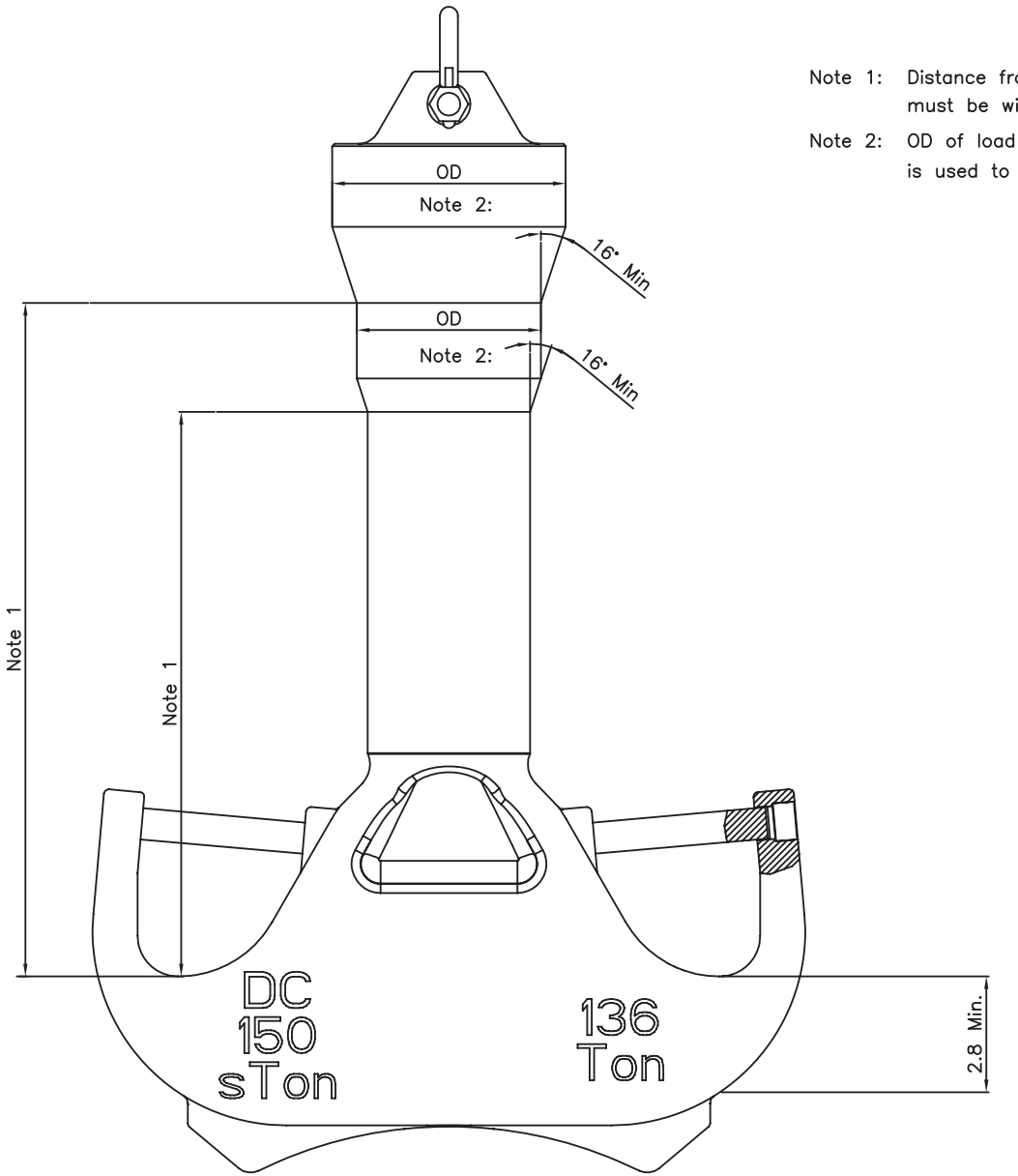

Note 1: Distance from each link arm seat to the load shoulder must be within 0.063, grind link arm if necessary.

Note 2: OD of load shoulder must be 0.625" bigger as the elevator through bore which is used to lift the dolly.

ORACLE PART NUMBER			
LEGACY PART NUMBER		REFERENCE ONLY	
MATERIAL			
SURF. FINISH/ PAINT SPEC	—	COLOR	
WEIGHT	LBS/		KG
CREATED BY	BdP	REV.	
CREATED ON	29 July 2014		
REVISED BY			
REVISED ON			
TC-ECR	00022008		
TITLE	Dolly Wear data		

UNLESS OTHERWISE SPECIFIED TOLERANCES OVER ANSI Y 14.5D
2 PLACE DECIMAL .XX ± .010
3 PLACE DECIMAL .XX ± .005
1 PLACE DECIMAL .X ± .1
ANGLES ± .5 DEGREE
BREAK SHARP CORNERS/ROUND
MACHINED SURFACES 125√
NONCRIT SURFACES 500√
ALL WELD SYMBOLS ACC. TO ISO
ALL WELD DIMENSIONS ARE 2 DEPTH

NATIONAL OILWELL VARCO

DO NOT SCALE DOCUMENT
THIS DOCUMENT IS TEAMCENTER CONTROLLED

SCALE None
UNITS INCH (MM)
PROJ.

SIZE B
DRAWING NO. WD-31189
SHEET 1 OF 1

TABULATED CASING BORE DATA

CASING SIZE		BORE CODE	TOP BORE (Tb)		BOTTOM BORE (Bb)		MARK ELEVATOR
INCH	MM		INCH	MM	INCH	MM	
4.1/2"	114.30	129	4.604"	116.94	4.604"	116.94	4.1/2" OD CAS.
4.3/4"	120.65	130	4.857"	123.37	4.857"	123.37	4.3/4" OD CAS.
5"	127.00	131	5.111"	129.82	5.111"	129.82	5" OD CAS.
5.1/8"	130.18	482	5.237"	133.02	5.237"	133.02	5.1/8" OD CAS.
5.1/4"	133.35	919	5.364"	136.25	5.364"	136.25	5.1/4" OD CAS.
5.1/2"	139.70	132	5.617"	142.68	5.617"	142.68	5.1/2" OD CAS.
5.3/4"	146.05	133	5.870"	149.10	5.870"	149.10	5.3/4" OD CAS.
5.7/8"	149.23	889	5.996"	152.30	5.996"	152.30	5.7/8" OD CAS.
6"	152.40	134	6.123"	155.52	6.123"	155.52	6" OD CAS.
6.1/4"	158.75	505	6.376"	161.95	6.376"	161.95	6.1/4" OD CAS.
6.1/2"	165.10	486	6.629"	168.38	6.629"	168.38	6.1/2" OD CAS.
6.5/8"	168.28	135	6.756"	171.60	6.756"	171.60	6.5/8" OD CAS.
6.3/4"	171.45	920	6.882"	174.80	6.882"	174.80	6.3/4" OD CAS.
6.7/8"	174.63	890	7.009"	178.03	7.009"	178.03	6.7/8" OD CAS.
7"	177.80	136	7.136"	181.25	7.136"	181.25	7" OD CAS.
7.1/4"	184.15	863	7.389"	187.68	7.389"	187.68	7.1/4" OD CAS.
7.1/2"	190.50	888	7.642"	194.11	7.642"	194.11	7.1/2" OD CAS.
7.5/8"	193.68	137	7.768"	197.31	7.768"	197.31	7.5/8" OD CAS.
7.3/4"	196.85	705	7.895"	200.53	7.895"	200.53	7.3/4" OD CAS.
8"	203.20	757	8.148"	206.96	8.148"	206.96	8" OD CAS.
8.1/8"	206.38	697	8.275"	210.19	8.275"	210.19	8.1/8" OD CAS.
8.1/2"	215.90	646	8.654"	219.81	8.654"	219.81	8.1/2" OD CAS.
8.5/8"	219.08	139	8.781"	223.04	8.781"	223.04	8.5/8" OD CAS.
8.3/4"	222.25	804	8.907"	226.24	8.907"	226.24	8.3/4" OD CAS.
8.7/8"	225.43	754	9.034"	229.46	9.034"	229.46	8.7/8" OD CAS.
9"	228.60	140	9.161"	232.69	9.161"	232.69	9" OD CAS.
9.1/8"	231.78	883	9.287"	235.89	9.287"	235.89	9.1/8" OD CAS.
9.3/8"	238.13	865	9.540"	242.32	9.540"	242.32	9.3/8" OD CAS.
9.1/2"	241.30	747	9.667"	245.54	9.667"	245.54	9.1/2" OD CAS.
9.5/8"	244.48	141	9.780"	248.41	9.780"	248.41	9.5/8" OD CAS.
9.3/4"	247.65	769	9.907"	251.64	9.907"	251.64	9.3/4" OD CAS.
9.7/8"	250.83	649	10.033"	254.84	10.033"	254.84	9.7/8" OD CAS.
10"	254.00	471/581/831	10.160"	258.06	10.160"	258.06	10" OD CAS.
10.1/8"	257.18	846	10.287"	261.29	10.287"	261.29	10.1/8" OD CAS.
10.1/4"	260.35	808	10.413"	264.49	10.413"	264.49	10.1/4" OD CAS.
10.5/8"	269.88	453	10.793"	274.14	10.793"	274.14	10.5/8" OD CAS.
10.3/4"	273.05	142	10.919"	277.34	10.919"	277.34	10.3/4" OD CAS.
10.7/8"	276.23	921	11.046"	280.57	11.046"	280.57	10.7/8" OD CAS.
11"	279.40	704	11.173"	283.79	11.173"	283.79	11" OD CAS.
11.5/8"	259.28	586	11.805"	299.85	11.805"	299.85	11.5/8" OD CAS.
11.3/4"	298.45	143	11.932"	303.07	11.932"	303.07	11.3/4" OD CAS.
11.7/8"	301.63	729	12.058"	306.27	12.058"	306.27	11.7/8" OD CAS.
12"	304.80	711	12.185"	309.50	12.185"	309.50	12" OD CAS.
12.1/8"	307.98	758	12.312"	312.72	12.312"	312.72	12.1/8" OD CAS.
12.1/4"	311.15	720	12.438"	315.93	12.438"	315.93	12.1/4" OD CAS.
12.5/8"	320.68	866	12.818"	325.58	12.818"	325.58	12.5/8" OD CAS.
12.3/4"	323.85	345	12.944"	328.78	12.944"	328.78	12.3/4" OD CAS.
12.7/8"	327.03	676	13.058"	331.67	13.058"	331.67	12.7/8" OD CAS.

TABULATED CASING BORE DATA

CASING SIZE		BORE CODE	TOP BORE (Tb)		BOTTOM BORE (Bb)		MARK ELEVATOR
INCH	MM		INCH	MM	INCH	MM	
13"	330.20	809	13.185"	334.90	13.185"	334.90	13" OD CAS.
13.3/8"	339.73	144	13.564"	344.53	13.564"	344.53	13.3/8" OD CAS.
13.1/2"	342.90	616/856	13.691"	347.75	13.691"	347.75	13.1/2" OD CAS.
13.5/8"	346.08	596	13.817"	350.95	13.817"	350.95	13.5/8" OD CAS.
13.7/8"	352.43	944	14.070"	357.38	14.070"	357.38	13.7/8" OD CAS.
14"	355.60	690	14.197"	360.60	14.197"	360.60	14" OD CAS.
14.1/2"	368.30	877	14.703"	373.46	14.703"	373.46	14.1/2" OD CAS.
14.3/4"	374.65	489	14.956"	379.88	14.956"	379.88	14.3/4" OD CAS.
15"	381.00	825	15.210"	386.33	15.210"	386.33	15" OD CAS.
16"	406.40	145	16.222"	412.04	16.222"	412.04	16" OD CAS.
16.1/16"	407.99	689	16.285"	413.64	16.285"	413.64	16.1/16" OD CAS.
16.1/4"	412.75	934	16.475"	418.47	16.475"	418.47	16.1/4" OD CAS.
16.5/8"	422.28	896	16.855"	428.18	16.855"	428.18	16.5/8" OD CAS.
16.3/4"	425.45	664	16.981"	431.32	16.981"	431.32	16.3/4" OD CAS.
17"	431.80	813	17.235"	437.77	17.235"	437.77	17" OD CAS.
17.7/8"	454.03	859	18.120"	460.25	18.120"	460.25	17.7/8" OD CAS.
18"	457.20	723	18.247"	463.47	18.247"	463.47	18" OD CAS.
18.3/16"	461.96	803	18.438"	468.33	18.438"	468.33	18.3/16" OD CAS.
18.1/2"	469.90	852	18.753"	476.33	18.753"	476.33	18.1/2" OD CAS.
18.5/8"	473.08	146	18.880"	479.55	18.880"	479.55	18.5/8" OD CAS.
18.3/4"	476.25	490	19.006"	482.75	19.006"	482.75	18.3/4" OD CAS.
19.1/2"	495.30	760	19.766"	502.06	19.766"	502.06	19.1/2" OD CAS.
19.5/8"	498.48	602	19.892"	505.26	19.892"	505.26	19.5/8" OD CAS.
20"	508.00	147	20.272"	514.91	20.272"	514.91	20" OD CAS.
20.1/2"	520.70	851	20.780"	527.81	20.780"	527.81	20.1/2" OD CAS.
20.3/4"	527.05	925	21.033"	534.24	21.033"	534.24	20.3/4" OD CAS.
20.7/8"	530.23	738	21.159"	537.44	21.159"	537.44	20.7/8" OD CAS.
21"	533.40	640	21.285"	540.64	21.285"	540.64	21" OD CAS.
21.1/4"	539.75	814	21.538"	547.07	21.538"	547.07	21.1/4" OD CAS.
21.1/2"	546.10	148	21.790"	553.47	21.790"	553.47	21.1/2" OD CAS.
22"	558.80	688	22.295"	566.29	22.295"	566.29	22" OD CAS.
22.1/2"	571.50	876	22.800"	579.12	22.800"	579.12	22.1/2" OD CAS.
23.1/2"	596.90	627	23.810"	604.77	23.810"	604.77	23.1/2" OD CAS.
24"	609.60	630	24.315"	617.60	24.315"	617.60	24" OD CAS.
24.1/2"	622.30	149	24.820"	630.43	24.820"	630.43	24.1/2" OD CAS.
25"	635.00	918	25.325"	643.26	25.325"	643.26	25" OD CAS.
26"	660.40	650	26.335"	668.91	26.335"	668.91	26" OD CAS.
27"	685.80	692	27.345"	694.56	27.345"	694.56	27" OD CAS.
28"	711.20	693	28.355"	720.22	28.355"	720.22	28" OD CAS.
29"	736.60	945	29.365"	745.87	29.365"	745.87	29" OD CAS.
30"	762.00	644	30.375"	771.53	30.375"	771.53	30" OD CAS.
32"	812.80	694	32.395"	822.83	32.395"	822.83	32" OD CAS.
36"	914.40	695	36.435"	925.45	36.435"	925.45	36" OD CAS.

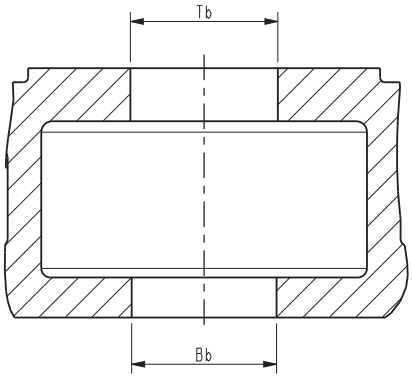

TOLERANCES ON BORE DIMENSIONS	
4.1/2" ≤ Tb ≤ 10"	+0.016" (0.40MM) -0.016" (0.40MM)
4.1/2" ≤ Bb ≤ 20"	+0.031" (0.79MM) -0.016" (0.40MM)
10" < Tb ≤ 20"	+0.031" (0.79MM) -0.016" (0.40MM)
10" < Bb ≤ 20"	+0.063" (1.59MM) -0.016" (0.40MM)
Tb > 20"	+0.063" (1.59MM) -0.031" (0.79MM)
Bb > 20"	+0.063" (1.59MM) -0.031" (0.79MM)

REVISION 1:
-UPDATED DRAWING.

NOTES:
1.BOTTOM BORE IS OPTIONAL SOME ELEVATORS DESIGNS DO NOT HAVE A BOTTOM BORE.

1 ORACLE PARTNUMBER	N/A		
LEGACY PARTNUMBER	N/A	REFERENCE ONLY	
MATERIAL	N/A		
SURF. FINISH / PAINTSPEC.	-	COLOR	-
WEIGHT	- Lbs		- kg
CREATED BY	Mike Daerden	REVISION	
CREATED ON	28-Apr-14 04:52:55 AM		
REVISED BY	Mike Daerden		
REVISED ON	30-Apr-14 04:35:37 AM		
TC - ECR	00012821	DAD	J

UNLESS OTHERWISE SPECIFIED
TOLERANCES (PER ANSI Y 14.5)
3 PLACE DECIMAL .XXX ± .010
2 PLACE DECIMAL .XX ± .03
1 PLACE DECIMAL .X ± .1
ANGLES ± .5 DEGREE
BREAK SHARP CORNERS .010 ± .005
MACHINED SURFACES 250
TORCHCUT SURFACES 1000
ALL WELD SYMBOLS ACC. TO ISO
ALL WELD DIMENSIONS ARE Z DIM'S

NATIONAL OILWELL VARCO

DO NOT SCALE DOCUMENT
THIS DOCUMENT IS NOV TEAMCENTER CONTROLLED
SCALE 1:1
UNITS INCH (mm)
PROJ.

TITLE: ELEVATOR BORE CHART FOR CASING
SIZE: C
DRAWING NO.: 15316-2
SHEET 1 OF 1

TUBING SIZE	STYLE	BORE CODE	TOP BORE	BOTTOM BORE	STAMP ELEVATOR
1.050	PLAIN	150	1.125	1.125	1.05 OD TBG
	UPSET	151	1.422	1.422	1.05 OD EU TBG
1.315	PLAIN	152	1.390	1.390	1.31 OD TBG
	UPSET	153	1.578	1.578	1.31 OD EU TBG
1.660	PLAIN	154	1.734	1.734	1.66 OD TBG
	UPSET	155	1.922	1.922	1.66 OD EU TBG
1.900	PLAIN	156	1.984	1.984	1.90 OD TBG
	UPSET	157	2.203	2.203	1.90 OD EU TBG
2 3/8	PLAIN	158	2.453	2.453	2 3/8 OD TBG
	UPSET	159	2.703	2.703	2 3/8 OD EU TBG
2 7/8	PLAIN	160	2.953	2.953	2 7/8 OD TBG
	UPSET	161	3.203	3.203	2 7/8 OD EU TBG
3 1/2	PLAIN	162	3.578	3.578	3 1/2 OD TBG
	UPSET	163	3.859	3.859	3 1/2 OD EU TBG
4	PLAIN	164	4.078	4.078	4 OD TBG
	UPSET	165	4.359	4.359	4 OD EU TBG
4 1/2	PLAIN	129	SEE 15316-2		4 1/2 OD TBG
	UPSET	167	4.859	4.859	4 1/2 OD EU TBG

CAUTION: DO NOT USE EXTERNAL UPSET ELEVATORS ON NON UPSET (PLAIN) TUBING

BORE TOLERANCES : TOP BORE Tb ± 1/64
BOTTOM BORE + 1/32
− 1/64

NOTES :
1. TO ARRIVE AT FINAL ASS'Y NO. USE FRAME ASS'Y NO. AND ADD BORE CODE NO. (EXAMPLE : 32384-163)
2. BORE SIZE MEASURED WITH LATCH AND LATCH LUG SURFACE CONTACT
3. CONVERSION FACTOR 1INCH = 25,4 MM

ORACLE PART NUMBER	—		
LEGACY PART NUMBER	—	REFERENCE ONLY	
MATERIAL	—		
SURF. FINISH/ PAINT SPEC	—	COLOR	—
WEIGHT	— LBS/	— KG	

UNLESS OTHERWISE SPECIFIED TOLERANCES (PER ANSI Y 14.5)
3 PLACE DECIMAL .XXX ± .010
2 PLACE DECIMAL .XX ± .03
1 PLACE DECIMAL .X ± .1
ANGLES ± .5 DEGREE
BREAK SHARP CORNERS .010±.005
MACHINED SURFACES 250√
TORCHCUT SURFACES 1000√
ALL WELD SYMBOLS ACC. TO ISO
ALL WELD DIMENSIONS ARE Z DIM'S

NATIONAL OILWELL VARCO

CREATED BY	Bob de Pont	REV.	
CREATED ON	17-Nov-94		
REVISED BY	Mike Doerden		
REVISED ON	9-Dec-13	DAD	P
TC-ECR			

DO NOT SCALE DOCUMENT
THIS DOCUMENT IS TEAMCENTER CONTROLLED
SCALE 1 : 1
UNITS INCH (MM)
PROJ.

TITLE
ELEVATOR BORE CHART FOR TUBING

SIZE B | DRAWING NO. 15316-3 | SHEET 1 OF 1

ELEVATOR BORES FOR 18" DRILL PIPE.

BORE CODE		116	117	118	119	120	121	122	123	124
TYPE	DIM	2.3/8 IF	2.7/8 REG. & HYDRILL.	2.7/8 IF	3.1/2 REG FH & HYDRILL.	3.1/2 IF	4 FH	4 IF 4.1/2 REG & FH	4.1/2 IF & 5 EIU	5.1/2 REG & FH
MG	FRAME	30157	30157	30157	30157	30157	30157	30157	30157	
	A	4.1/4	4.3/4	4.3/4	5.1/2	5.1/2	6.1/2	6.3/4	7.1/8	
	C	2.21/32	3.3/32	3.9/32	3.25/32	3.31/32	4.9/32	4.25/32	5.1/4	
	D	4.3/4	4.3/4	4.3/4	4.3/4	4.3/4	4.3/4	5.1/4	5.1/4	
	F	2	2	2	2	2	1.3/8	1.3/8	1.3/8	
	* G	1/8	1/8	1/8	1/8	1/8	1/8	1/8	1/8	
RGG	FRAME	200680	200680	200680	200680	200680				
	A	4.1/4	4.3/4	4.3/4	5.1/2	5.1/2				
	C	2.21/32	3.3/32	3.9/32	3.25/32	3.31/32				
	D	4.3/4	4.3/4	4.3/4	4.3/4	4.3/4				
	F	1.3/4	1.3/4	1.3/4	1.3/4	1.3/4				
	* G	1/2	1/2	1/2	1/2	1/2				
GG	FRAME					31068 & 35143	31068 & 35143	31068 & 35143	31068 & 35143	31068 & 35143
	A					5.1/2	6.1/2	6.3/4	7.1/8	7.7/8
	C					3.31/32	4.9/32	4.25/32	5.1/4	5.13/16
	D					7	7	7	7	7
	F					1.3/8	1.3/8	2.3/8	2.3/8	2.3/8
	* G					1/8	1/8	3/8	1/2	5/8
HGG	FRAME							70013 & 70222	70013 & 70222	70013 & 70222
	A							6.3/4	7.1/8	7.7/8
	C							4.25/32	5.1/4	5.13/16
	D							7	7	7
	F							2.3/8	2.3/8	2.3/8
	* G							3/8	1/2	5/8
MGG	FRAME				35005 & 36056	35005 & 36056	35005 & 36056	35005 & 36056	35005 & 36056	35005 & 36056
	A				5.1/2	5.1/2	6.1/2	6.3/4	7.1/8	7.7/8
	C				3.25/32	3.31/32	4.9/32	4.25/32	5.1/4	5.13/16
	D				7	7	7	7	7	7
	F				2.1/2	2.1/2	2.1/2	2.1/2	2.1/2	2.1/2
	* G				1	1	1	1	1	1
SLB	FRAME	36950	36950	36950	36950 & 36997	36950 & 36997	36997	36997		
	A	4.1/4	4.3/4	4.3/4	5.1/2	5.1/2	6.1/2	6.3/4		
	B	3.1/2	4	4	5.1/4	5.1/4	6.1/8	6.3/8		
	C	2.21/32	3.3/32	3.9/32	3.25/32	3.31/32	4.9/32	4.25/32		
	D	3.7/16	3.7/16	3.7/16	3.25/32	3.31/32	4.9/32	4.25/32		
	F	2.11/16	2.11/16	2.11/16	2.11/16	2.11/16	2.5/8	2.5/8		
	* G	1/2	1/2	1/2	1/2	1/2	1/2	1/2		
SLBB & DUAL SLBB	FRAME						32227	32227	32227	32227
	A						NONE	NONE	NONE	NONE
	B						5.1/2	6.3/8	6.5/8	7.1/8
	C						4.9/32	4.25/32	5.1/4	5.13/16
	D						4.9/32	4.25/32	5.1/4	5.13/16
	F						0	0	0	0
	* G						1/2	5/8	1.1/4	5/8
	FRAME									
	A									
	B									
	C									
	D									
	F									
	* G									

ELEVATOR BORES FOR SPANG EXTREME LINE & SPANGSEAL TUBING.

BORE CODE	126	127	128
	2.3/8	2.7/8	3.1/2
FRAME	30157	30157	30157
A	4.1/4	4.3/4	5.1/2
C	2.15/32	2.31/32	3.19/32
D	4.3/4	4.3/4	4.3/4
F	2	2	2
* G	1/8	1/8	1/8

BORE CODE	STAMP ELEVATOR.
116	2.3/8 EU
117	2.7/8 IU
118	2.7/8 EU
119	3.1/2 IU
120	3.1/2 EU
121	4 IU
122	4 EU, 4.1/2 IU, 4.1/2 IEU
123	4.1/2 EU, 5 IEU
124	5.1/2 IEU

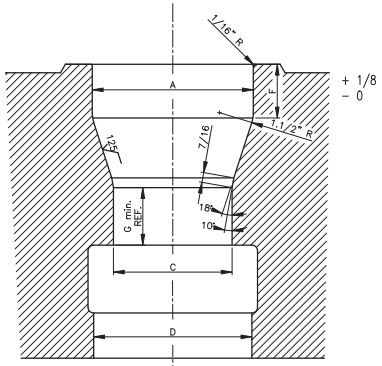

TYPES MG RGG GG HGG MGG.

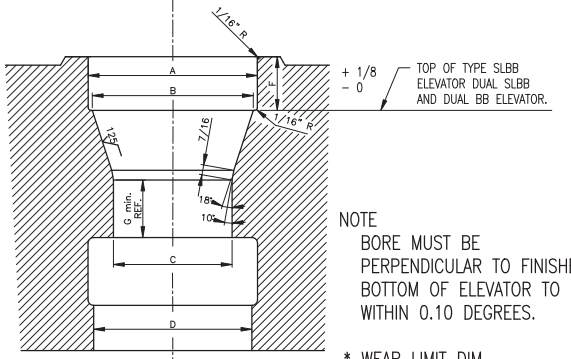

TYPES SLB SLBB.

NOTE
BORE MUST BE PERPENDICULAR TO FINISHED BOTTOM OF ELEVATOR TO WITHIN 0.10 DEGREES.

* WEAR LIMIT DIM.

PART NO.	QTY.	NEXT ASS'Y	FINAL ASS'Y
15316	1	–	SEE CHART

VarcoBJ
A Varco Company

MACHINE TOLERANCES FOR ELEVATOR BORE + 1/32 - .000 BORE FINISH 250
UNLESS OTHERWISE SPECIFIED
ANGULAR TOLERANCES ARE + 0° - 0°

DO NOT SCALE DRAWING.

	NAME	DATE	PROJ.
PREPARED	C.Dekkers	03-04-'99	
CHECKED	A.d.Pont	03-04-'99	SCALE NONE
APPROVED	J.v.Beeck	03-04-'99	UNITS INCH (MM)

MATERIAL
WEIGHT LBS/ KG

REV.	E.C.	NAME	DATE	CHECKED
W				
V				
U	572101	C.D.	11-04-'99	F.S.
T	572001	C.D.	03-04-'99	A.d.P.

ACAD FILE NO. :

TITLE ELEVATOR BORE CHART F/DRILL PIPE HAVING 18" SHOULDERED TOOL JOINTS

SIZE D DRAWING NO. 15316-5 SHEET 1 OF 1

REDRAWN / REPLACED BY: C-15316-116 t/m -124 & C-15316-7

REPLACES: C-15316-5 Rev. S DD: 06-26-75

DRILL COLLAR OD	BORE CODE	A		C		B		D	
		INCH	MM	INCH	MM	INCH	MM	INCH	MM
3.1/8"	735	2.813"	71.45	0.063"	1.60	3.250"	82.55	3.625"	92.08
3.3/8"	736	3.063"	77.80	0.063"	1.60	3.500"	88.90	3.875"	98.43
3.1/2"	625	3.188"	80.98	0.063"	1.60	3.625"	92.08	4.000"	101.60
3.3/4"	582	3.438"	87.33	0.063"	1.60	3.875"	98.43	4.250"	107.95
3.7/8"	802	3.563"	90.50	0.063"	1.60	4.000"	101.60	4.375"	111.13
4.1/8"	177	3.813"	96.85	0.063"	1.60	4.250"	107.95	4.625"	117.48
4.1/4"	674	3.938"	100.03	0.063"	1.60	4.375"	111.13	4.750"	120.65
4.1/2"	554	4.188"	106.38	0.063"	1.60	4.625"	117.48	5.000"	127.00
4.3/4"	435	4.375"	111.13	0.063"	1.60	4.875"	123.83	5.250"	133.35
4.7/8"	466	4.500"	114.30	0.063"	1.60	5.000"	127.00	5.375"	136.53
5"	530	4.625"	117.48	0.063"	1.60	5.125"	130.18	5.500"	139.70
5.1/4"	179	4.875"	123.83	0.063"	1.60	5.375"	136.53	5.750"	146.05
5.1/2"	180	5.125"	130.18	0.063"	1.60	5.625"	142.88	6.000"	152.40
5.5/8"	609	5.250"	133.35	0.063"	1.60	5.750"	146.05	6.125"	155.58
5.3/4"	181	5.375"	136.53	0.063"	1.60	5.875"	149.23	6.250"	158.75
6"	362	5.500"	139.70	0.063"	1.60	6.125"	155.58	6.500"	165.10
6.1/4"	337	5.750"	146.05	0.063"	1.60	6.375"	161.93	6.750"	171.45
6.3/8"	409	5.875"	149.23	0.063"	1.60	6.500"	165.10	6.875"	174.63
6.1/2"	373	6.000"	152.40	0.063"	1.60	6.625"	168.28	7.000"	177.80
6.5/8"	667	6.125"	155.58	0.063"	1.60	6.750"	171.45	7.125"	180.98
6.3/4"	387	6.188"	157.18	0.094"	2.39	6.875"	174.63	7.250"	184.15
7"	361	6.313"	160.35	0.094"	2.39	7.125"	180.98	7.500"	190.50
7.3/16"	606	6.625"	168.28	0.063"	1.60	7.313	185.75	7.688"	195.28
7.1/4"	357	6.688"	169.88	0.094"	2.39	7.375"	187.33	7.750"	196.85
7.1/2"	188	6.938"	176.23	0.094"	2.39	7.625"	193.68	8.000"	203.20
7.3/4"	339	7.188"	182.58	0.094"	2.39	7.875"	200.03	8.250"	209.55
8"	336	7.438"	188.93	0.094"	2.39	8.125"	206.38	8.500"	215.90
8.1/8"	610	7.563"	192.10	0.094"	2.39	8.250"	209.55	8.625"	219.08
8.1/4"	422	7.688"	195.28	0.094"	2.39	8.375"	212.73	8.750"	222.25
8.1/2"	426	7.938"	201.63	0.094"	2.39	8.625"	219.08	9.000"	228.60
8.5/8"	613	8.063"	204.80	0.094"	2.39	8.750"	222.25	9.125"	231.78
8.3/4"	553	8.125"	206.38	0.125"	3.18	8.875"	225.43	9.250"	234.95
9"	427	8.375"	212.73	0.125"	3.18	9.125"	231.78	9.500"	241.30
9.1/4"	564	8.625"	219.08	0.125"	3.18	9.375"	238.13	9.750"	247.65
9.1/2"	370	8.875"	225.43	0.125"	3.18	9.625"	244.48	10.000"	254.00
9.5/8"	600	9.000"	228.60	0.125"	3.18	9.750"	247.65	10.125"	257.18
9.3/4"	367	9.125"	231.78	0.125"	3.18	9.875"	250.83	10.250"	260.35
10"	195	9.375"	238.13	0.125"	3.18	10.125"	257.18	10.500"	266.70
10.3/4"	527	10.125"	257.18	0.125"	3.18	10.875"	276.23	11.250"	285.75
11"	419	10.375"	263.53	0.125"	3.18	11.125"	282.58	11.500"	292.10
11.1/4"	196	10.625"	269.88	0.125"	3.18	11.375"	288.93	11.750"	298.45
11.3/4"	715	11.125"	282.58	0.125"	3.18	11.875"	301.63	12.250"	311.15
12.3/4"	716	12.125"	307.98	0.125"	3.18	12.875"	327.03	13.250"	336.55
14"	578	13.375"	339.73	0.125"	3.18	14.125"	358.78	14.500"	368.30
16.3/4"	717	16.125"	409.58	0.125"	3.18	16.875"	428.63	17.250"	438.15

ELEVATOR/BUSHING BORES BASED ON DRILL COLLAR O.D.

DRILL COLLAR O.D. RANGES	A	B	C	D
4" -4.5/8"	O.D. MINUS 0.313"	O.D. PLUS 0.125"	0.063"	O.D. PLUS 0.500"
4.3/4" - 5.5/8"	O.D. MINUS 0.375"	O.D. PLUS 0.125"	0.063"	O.D. PLUS 0.500"
5.3/4" - 6.5/8"	O.D. MINUS 0.500"	O.D. PLUS 0.125"	0.063"	O.D. PLUS 0.500"
6.3/4" - 8.5/8"	O.D. MINUS 0.563"	O.D. PLUS 0.125"	0.063"	O.D. PLUS 0.500"
8.3/4" & LARGER	O.D. MINUS 0.625"	O.D. PLUS 0.125"	0.063"	O.D. PLUS 0.500"

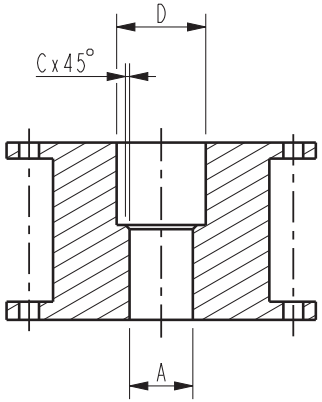

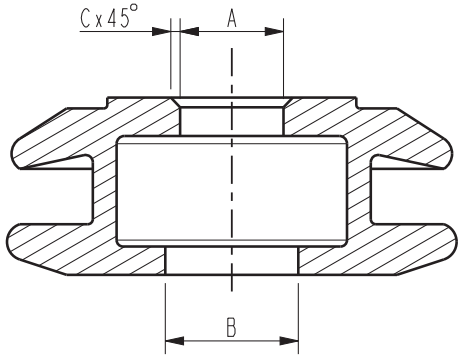

REVISION AC:
-UPDATED DRAWING.
-ADDED BORECODES.
-ADDED NOTE.

AC
NOTES:
1.FOR WEAR DATA SEE DWG. 15316-6A.
2.MARK THE PART WITH THE DRILL COLLAR O.D. AND THE TEXT "GROOVED".

TOLERANCES ON BORE DIMENSIONS	
A	+0.000 -0.031
B	+0.063 -0.000

AC ORACLE PARTNUMBER	N/A		
LEGACY PARTNUMBER	N/A	REFERENCE ONLY	
MATERIAL	N/A		
SURF. FINISH / PAINTSPEC.	-	COLOR	-
WEIGHT	- Lbs		- kg
CREATED BY	Mike Daerden	REVISION	
CREATED ON	25-Apr-14 03:21:43 AM		
REVISED BY	Mike Daerden		
REVISED ON	01-May-14 04:30:00 AM	AC	
TC - ECR	00012821	DAD	

UNLESS OTHERWISE SPECIFIED

TOLERANCES (PER ANSI Y 14.5)
3 PLACE DECIMAL .XXX ± .010
2 PLACE DECIMAL .XX ± .03
1 PLACE DECIMAL .X ± .1
ANGLES ± .5 DEGREE

BREAK SHARP CORNERS .010 ± .005

MACHINED SURFACES 250

TORCHCUT SURFACES 1000

ALL WELD SYMBOLS ACC. TO ISO

ALL WELD DIMENSIONS ARE Z DIM'S

NOV
NATIONAL OILWELL VARCO

DO NOT SCALE DOCUMENT | SCALE 1:1 | PROJ.

THIS DOCUMENT IS NOV TEAMCENTER CONTROLLED | UNITS INCH (mm)

TITLE: DC ZIP BORES | SIZE B | DRAWING NO. 15316-6 | SHEET 1 OF 1

DRILL COLLAR OD	BORE CODE	BORE Bb	BEVEL C	BORE Tb	BX4 A	BX5 A	B
4-3/4	435	4.375	0.063	5.25	2.188	0.438	0.438
5	530	4.625	0.063	5.50	2.313		0.438
5-1/4	179	4.875	0.063	5.75	2.438		0.438
5-1/2	180	5.125	0.063	6.00	2.563		0.438
5-3/4	181	5.250	0.063	6.25	2.625		0.500
6	362	5.500	0.063	6.50	2.750	2.750	0.500
6-1/4	337	5.750	0.063	6.75	2.875	2.875	0.500
6-3/8	409	5.938	0.063	6.88	2.969		0.470
6-1/2	373	6.000	0.063	7.00	3.000	3.000	0.500
6-3/4	387	6.188	0.094	7.25	2.540	2.340	
7	361	6.438	0.094	7.50	2.660	2.400	

DRILL COLLAR OD	BORE CODE	BORE Bb	BEVEL C	BORE Tb	BX4 A	BX5 A	B
7-1/4	357	6.688	0.094	7.75	2.790		
7-3/4	339	7.188	0.094	8.25	3.040	2.840	
8	336	7.438	0.094	8.50	3.160	2.970	
8-1/4	422	7.688	0.094	8.75	3.290	3.100	
8-1/2	426	7.938	0.094	9.00	3.150	3.220	
8-3/4	553	8.125	0.125	9.25	3.280		
9	427	8.375	0.125	9.50	3.400	3.440	
9-1/2	370	8.875	0.125	9.75	3.650	3.700	
9-3/4	367	9.125	0.125	10.25	3.770	3.820	
10	195	9.375	0.125	10.50	3.890	3.940	
10-3/4	527	10.125	0.125	11.25		4.320	
11	419	10.375	0.125	11.50		4.440	

Tollerances on bore sizes
Bb = $^{0}_{-1/32}$
Tb = $^{+1/16}_{0}$

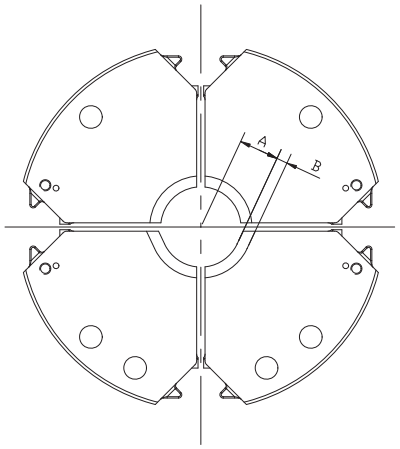

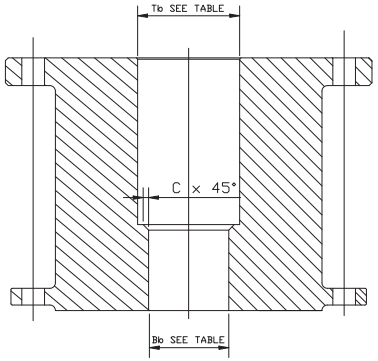

BX Bushings

PARTNUMBER			
MATERIAL			
SURF. FINISH/ PAINT SPEC	—		
COLOR	—		
WEIGHT	— LBS/	— KG	
ORIGINAL DOCUMENT		LATEST REVISION	
NAME	J.Haanskorf	NAME	J.Haanskorf
DATE	04-08-2009	DATE	04-08-2009
DRAWING TYPE	MG	E.C.N.	701068
REV.	W		

UNLESS OTHERWISE SPECIFIED TOLERANCES (PER ANSI Y 14.5)
3 PLACE DECIMAL .XXX ± .010
2 PLACE DECIMAL .XX ± .03
1 PLACE DECIMAL .X ± .1
ANGLES ± .5 DEGREE
BREAK SHARP CORNERS .010±.005
MACHINED SURFACES 250
TORCHCUT SURFACES 1000
ALL WELD SYMBOLS ACC. TO ISO

DO NOT SCALE DOCUMENT

THIS DOCUMENT IS DMS CONTROLLED

NATIONAL OILWELL VARCO

SCALE none
UNITS INCH (MM)
PROJ.

TITLE: DC zip bores

SIZE: B

DRAWING NO. 15316-6

SHEET 2 OF 2

DRILL COLLAR OD	BORE CODE	A / Tb		C		B / Bb	
		INCH	MM	INCH	MM	INCH	MM
2.1/2"	201	2.656"	67.46	0.063"	1.59	2.656"	67.46
2.3/4"	203	2.906"	73.81	0.063"	1.59	2.906"	73.81
2.7/8"	824	3.000"	76.20	0.063"	1.59	3.000"	76.20
3"	205	3.156"	80.16	0.063"	1.59	3.156"	80.16
3.1/8"	206	3.281"	83.34	0.063"	1.59	3.281"	83.34
3.1/4"	207	3.406"	86.51	0.063"	1.59	3.406"	86.51
3.3/8"	575	3.516"	89.31	0.063"	1.59	3.516"	89.31
3.1/2"	209	3.656"	92.86	0.063"	1.59	3.656"	92.86
3.3/4"	211	3.906"	99.21	0.063"	1.59	3.906"	99.21
3.7/8"	763	4.031"	102.39	0.063"	1.59	4.031"	102.39
4"	213	4.156"	105.56	0.063"	1.59	4.156"	105.56
4.1/8"	519	4.281"	108.74	0.063"	1.59	4.281"	108.74
4.1/4"	548	4.406"	111.91	0.063"	1.59	4.406"	111.91
4.1/2"	215	4.656"	118.26	0.063"	1.59	4.656"	118.26
4.3/4"	354	4.938"	125.43	0.063"	1.59	4.938"	125.43
5"	552	5.188"	131.78	0.063"	1.59	5.188"	131.78
5.1/4"	219	5.438"	138.13	0.063"	1.59	5.438"	138.13
5.1/2"	411	5.688"	144.48	0.063"	1.59	5.688"	144.48
5.3/4"	222	5.969"	151.61	0.063"	1.59	5.969"	151.61
6"	349	6.219"	157.96	0.063"	1.59	6.219"	157.96
6.1/4"	348	6.469"	164.31	0.063"	1.59	6.469"	164.31
6.3/8"	331	6.594"	167.49	0.063"	1.59	6.594"	167.49
6.1/2"	765	5.719"	145.26	0.063"	1.59	5.719"	145.26
6.3/4"	338	7.000"	177.80	0.063"	1.59	7.000"	177.80
7"	372	7.250"	184.15	0.063"	1.59	7.250"	184.15
7.1/4"	355	7.500"	190.50	0.063"	1.59	7.500"	190.50
7.3/8"	599	7.625"	193.68	0.063"	1.59	7.625"	193.68
7.1/2"	766	7.750"	196.85	0.063"	1.59	7.750"	196.85
7.3/4"	550	8.000"	203.20	0.063"	1.59	8.000"	203.20
8"	334	8.250"	209.55	0.063"	1.59	8.250"	209.55
8.1/4"	347	8.500"	215.90	0.063"	1.59	8.500"	215.90
8.1/2"	580	8.781"	223.04	0.063"	1.59	8.781"	223.04
8.3/4"	226	9.031"	229.39	0.063"	1.59	9.031"	229.39
9"	356	9.281"	235.74	0.063"	1.59	9.281"	235.74
9.1/4"	227	9.531"	242.09	0.063"	1.59	9.531"	242.09
9.1/2"	346	9.781"	248.44	0.063"	1.59	9.781"	248.44
9.5/8"	479	9.969"	253.21	0.063"	1.59	9.969"	253.21
9.3/4"	680	9.094"	230.99	0.063"	1.59	9.094"	230.99
10"	228	10.344"	262.74	0.063"	1.59	10.344"	262.74
10.1/2"	229	10.844"	275.44	0.063"	1.59	10.844"	275.44
11"	230	11.344"	288.14	0.063"	1.59	11.344"	288.14
11.3/4"	621	12.094"	307.19	0.063"	1.59	12.094"	307.19
14"	679	14.344"	364.34	0.063"	1.59	14.344"	364.34

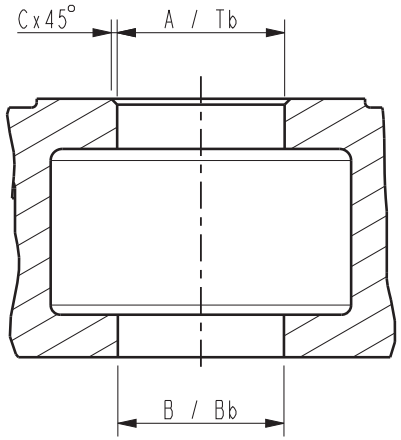

AC

NOTES:
1. MARK THE PART WITH THE DRILL COLLAR O.D. AND THE TEXT "WITH LIFT PLUG".

TOLERANCES ON BORE DIMENSIONS	
A / Tb	+0.000 -0.031
B / Bb	+0.063 -0.000

AC

ORACLE PARTNUMBER	N/A		
LEGACY PARTNUMBER	N/A		REFERENCE ONLY
MATERIAL	-		
SURF. FINISH / PAINTSPEC.	-	COLOR	-
WEIGHT	- Lbs		- kg
CREATED BY	Mike Daerden		REVISION
CREATED ON	25-Apr-14 04:25:35 AM		
REVISED BY	Mike Daerden		
REVISED ON	01-May-14 04:30:00 AM		R
TC - ECR	00012821	DAD	

UNLESS OTHERWISE SPECIFIED

TOLERANCES (PER ANSI Y 14.5)
3 PLACE DECIMAL .XXX ± .010
2 PLACE DECIMAL .XX ± .03
1 PLACE DECIMAL .X ± .1
ANGLES ± .5 DEGREE

BREAK SHARP CORNERS .010 ± .005

MACHINED SURFACES 250

TORCHCUT SURFACES 1000

ALL WELD SYMBOLS ACC. TO ISO

ALL WELD DIMENSIONS ARE Z DIM'S

NOV
NATIONAL OILWELL VARCO

DO NOT SCALE DOCUMENT

SCALE 1:1

PROJ.

THIS DOCUMENT IS NOV TEAMCENTER CONTROLLED

UNITS INCH (mm)

REVISION AC:
-UPDATED DRAWING.
-ADDED BORECODES.

TITLE	SIZE	DRAWING NO.	SHEET
DRILL COLLARS WITH LIFT PLUG	B	15316-8	1 OF 1

ITEM	QTY	PART NUMBER	DESCRIPTION
1	2	50512-C	NUT, HEX-SLOTTED 3/4-10
2	2	50812-R-C	WASHER, FLAT 3/4", REGULAR
3	2	51403-16	COTTER PIN 3/16 X 2
4	2	10141966	LINK ADAPTER DSJX
5	1	10713115	DSJX MACHINING
6	2	10927805-001	DSJX ADAPTER PIN
7	1	10731586	DSJX INSERT SET, MACH.

NOTES:
1. TOP HOLE IN LINK ADAPTERS 10141966 MATCH LIFTING SLING 10115190.
2. P/N OF ASS'Y IS 10713146 FOLLOWED BY A 3 DIGIT DASH NUMBER. THIS DASH NUMBER IS USED FOR ADMINISTRATIVE PURPOSES ONLY AND DOES NOT REFER TO ANY PIPE SIZE.
3. THE PIPE SIZE WHICH THE SPECIFIC INSERT IS DESIGNED FOR, IS INDICATED BY THE BORE CODE STAMPED ON THE INSERT.
4. FOR A LISTING OF ALL AVAILABLE INSERTS = POS 7 IN BILL OF MATERIAL (BORE CODES AND PSL LEVELS), PLEASE REFER TO THE DSJX MANUAL.

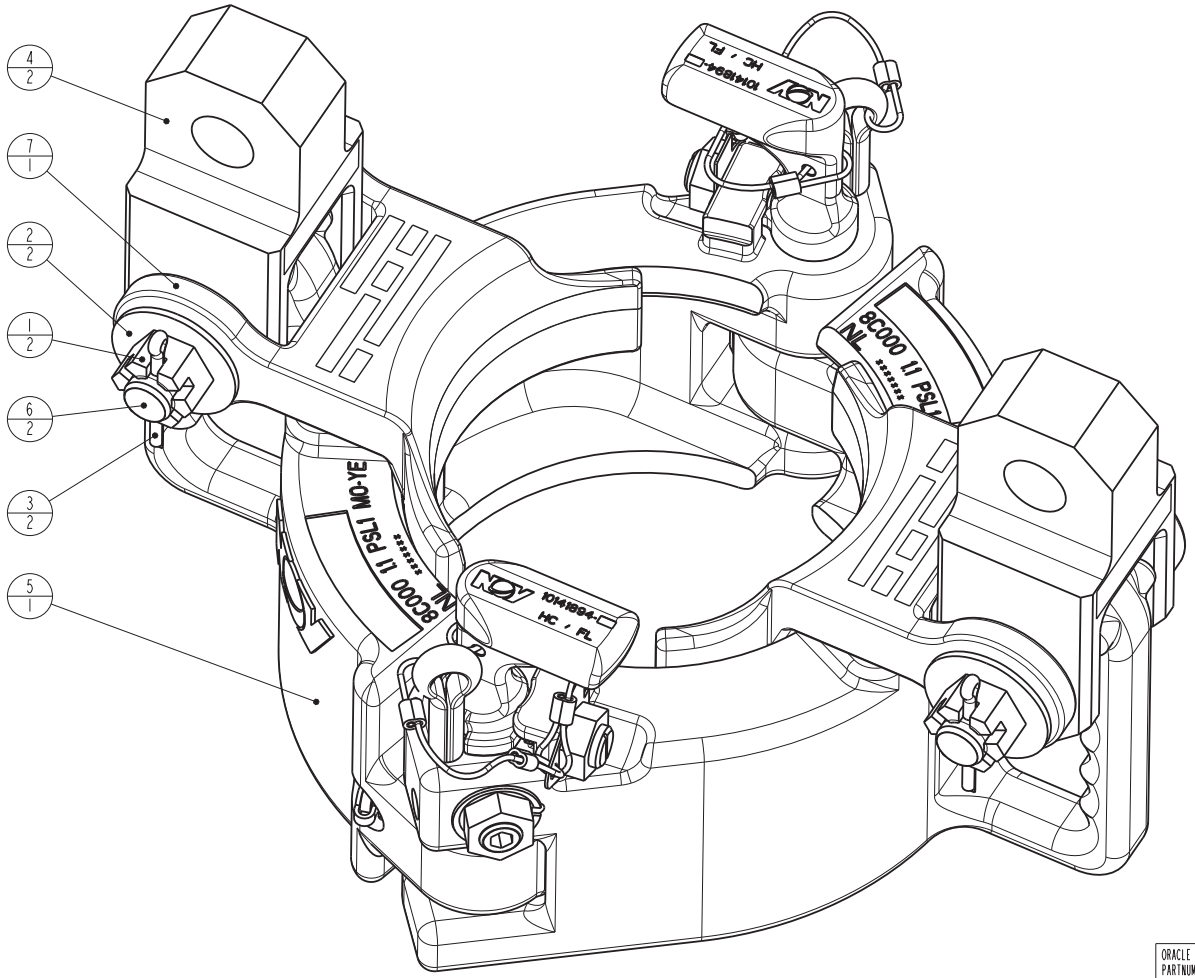

△1 = Pictorial update

ORACLE PARTNUMBER	10713146		
LEGACY PARTNUMBER	50004955	REFERENCE ONLY	
MATERIAL	-		
SURF. FINISH / PAINTSPEC.	-	COLOR	-
WEIGHT	72.9 Lbs	33.1 kg	
CREATED BY	Hans van Rijzingen	REVISION	
CREATED ON	09-Jun-11 01:46:24 PM		
REVISED BY	Bjorn Buijnsters		
REVISED ON	17-Jul-14 12:56:04 AM		F
TC - ECR	00024546	ASM	

UNLESS OTHERWISE SPECIFIED
TOLERANCES (PER ANSI Y 14.5)
3 PLACE DECIMAL .XXX ± .010
2 PLACE DECIMAL .XX ± .03
1 PLACE DECIMAL .X ± .1
ANGLES ± .5 DEGREE
BREAK SHARP CORNERS .010 ± .005
MACHINED SURFACES 250
TORCHCUT SURFACES 1000
ALL WELD SYMBOLS ACC. TO ISO
ALL WELD DIMENSIONS ARE Z DIM'S

NATIONAL OILWELL VARCO

DO NOT SCALE DOCUMENT
THIS DOCUMENT IS NOV TEAMCENTER CONTROLLED
SCALE 3:4
UNITS INCH (mm)
PROJ.

TITLE: DSJX ASSEMBLY 3 25/32" - 6 1/8"
SIZE: C
DRAWING NO.: 50004955
SHEET 1 OF 1

ITEM	QTY	PART NUMBER	DESCRIPTION
1	2	50512-C	NUT, HEX-SLOTTED 3/4-10
2	2	50812-R-C	WASHER, FLAT 3/4", REGULAR
3	2	51403-16	COTTER PIN 3/16 X 2
4	2	10141966	LINK ADAPTER DSJX
5	1	10713117	DSJX MACHINING
6	2	10927805-001	DSJX ADAPTER PIN
7	1	10141990	DSJX INSERT SET, MACH.

NOTES:
1. TOP HOLE IN LINK ADAPTERS 10141966 MATCH LIFTING SLING 10115190.
2. P/N OF ASS'Y IS 10713348 FOLLOWED BY A 3 DIGIT DASH NUMBER. THIS DASH NUMBER IS USED FOR ADMINISTRATIVE PURPOSES ONLY AND DOES NOT REFER TO ANY PIPE SIZE.
3. THE PIPE SIZE WHICH THE SPECIFIC INSERT IS DESIGNED FOR, IS INDICATED BY THE BORE CODE STAMPED ON THE INSERT.
4. FOR A LISTING OF ALL AVAILABLE INSERTS = POS 7 IN BILL OF MATERIAL (BORE CODES AND PSL LEVELS), PLEASE REFER TO THE DSJX MANUAL.

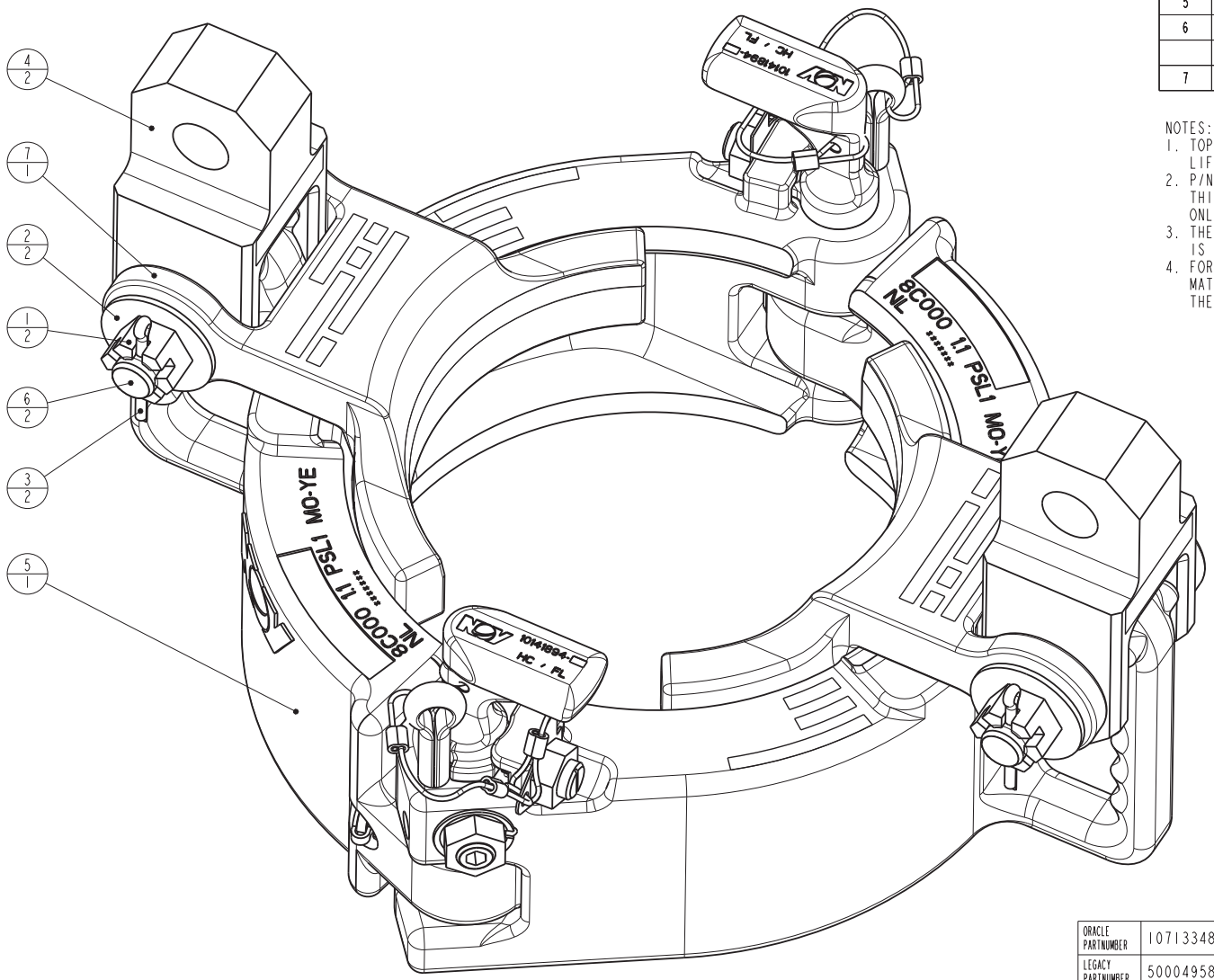

△D = Pictorial update

ORACLE PARTNUMBER	10713348		
LEGACY PARTNUMBER	50004958	REFERENCE ONLY	
MATERIAL	-		
SURF. FINISH / PAINTSPEC.	-	COLOR	-
WEIGHT	85.7 Lbs	38.9 kg	
CREATED BY	Niels Uitdehaag	REVISION	
CREATED ON	19-Aug-11 12:02:31 PM		
REVISED BY	Bjorn Buijnsters		
REVISED ON	17-Jul-14 04:25:57 AM		D
TC - ECR	00024546	ASM	

UNLESS OTHERWISE SPECIFIED
TOLERANCES (PER ANSI Y 14.5)
3 PLACE DECIMAL .XXX ± .010
2 PLACE DECIMAL .XX ± .03
1 PLACE DECIMAL .X ± .1
ANGLES ± .5 DEGREE
BREAK SHARP CORNERS .010 ± .005
MACHINED SURFACES 250
TORCHCUT SURFACES 1000
ALL WELD SYMBOLS ACC. TO ISO
ALL WELD DIMENSIONS ARE Z DIM'S

NATIONAL OILWELL VARCO

DO NOT SCALE DOCUMENT
THIS DOCUMENT IS NOV TEAMCENTER CONTROLLED
SCALE 3:4
UNITS INCH (mm)
PROJ.

TITLE: DSJX ASSEMBLY 6 1/4" - 8 7/8"
SIZE: C
DRAWING NO.: 50004958
SHEET 1 OF 1

ITEM	QTY	PART NUMBER	DESCRIPTION
1	4	11000562-001	HEAVY DUTY THIMBLE 5.5" REINFORCED PAINTED BLACK
2	4	979435-22	DUPLEX NON-TAPERED SLEEVE, 7/8", CROSBY S-506
3	2	10998465-001	SHACKLE, GREEN PIN SUPER, 7 sT WLL G-5263
4	1	979856-4	RING WELDED
5	1	10140515	ID TAG FOR SLING 50001105
6	1	11014229-001	MASTER LINK ACC DNV 2.7-1 WLL 23.0T
7	2	979436-22	CABLE 22 mm, 6 STRINGS WITH STEEL INLAY

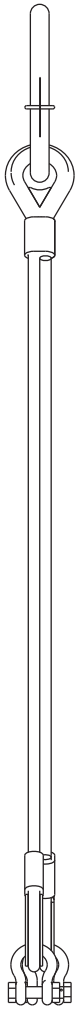

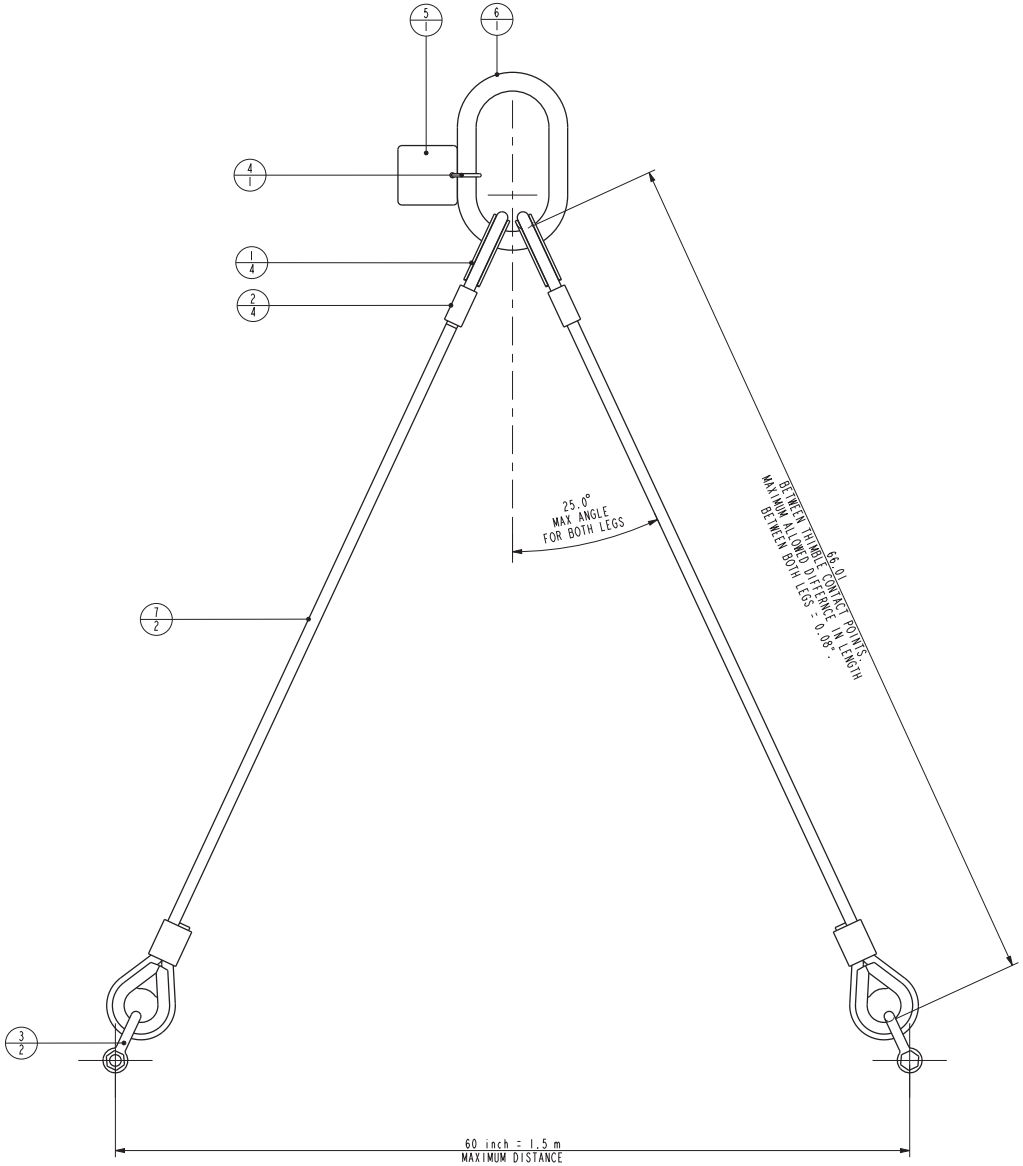

ORACLE PARTNUMBER	10115190		
LEGACY PARTNUMBER	50001105	REFERENCE ONLY	
MATERIAL	-		
SURF. FINISH / PAINTSPEC.	-	COLOR	-
WEIGHT	64.2 Lbs	29.1 kg	
CREATED BY	Bart van der Borst	REVISION	
CREATED ON	05-Mar-15 02:13:04 PM	01	
REVISED BY	Bart van der Borst		
REVISED ON	06-Mar-15 09:12:57 AM		
TC - ECR	00034331	GAD	

UNLESS OTHERWISE SPECIFIED
TOLERANCES (PER ANSI Y 14.5)
3 PLACE DECIMAL .XXX ± .010
2 PLACE DECIMAL .XX ± .03
1 PLACE DECIMAL .X ± .1
ANGLES ± .5 DEGREE
BREAK SHARP CORNERS .010 ± .005
MACHINED SURFACES 125
TORCHCUT SURFACES 1000
ALL WELD SYMBOLS ACC. TO ISO
ALL WELD DIMENSIONS ARE 2 DIM'S

DO NOT SCALE DOCUMENT
THIS DOCUMENT IS NOV TEAMCENTER CONTROLLED

NATIONAL OILWELL VARCO

SCALE 1:5
UNITS INCH (mm)
PROJ.

TITLE
2-WAY LIFTING SLING, SWL 12 Sh.T.

SIZE D
DRAWING NO. 50001105-GAD
SHEET 1 OF 1

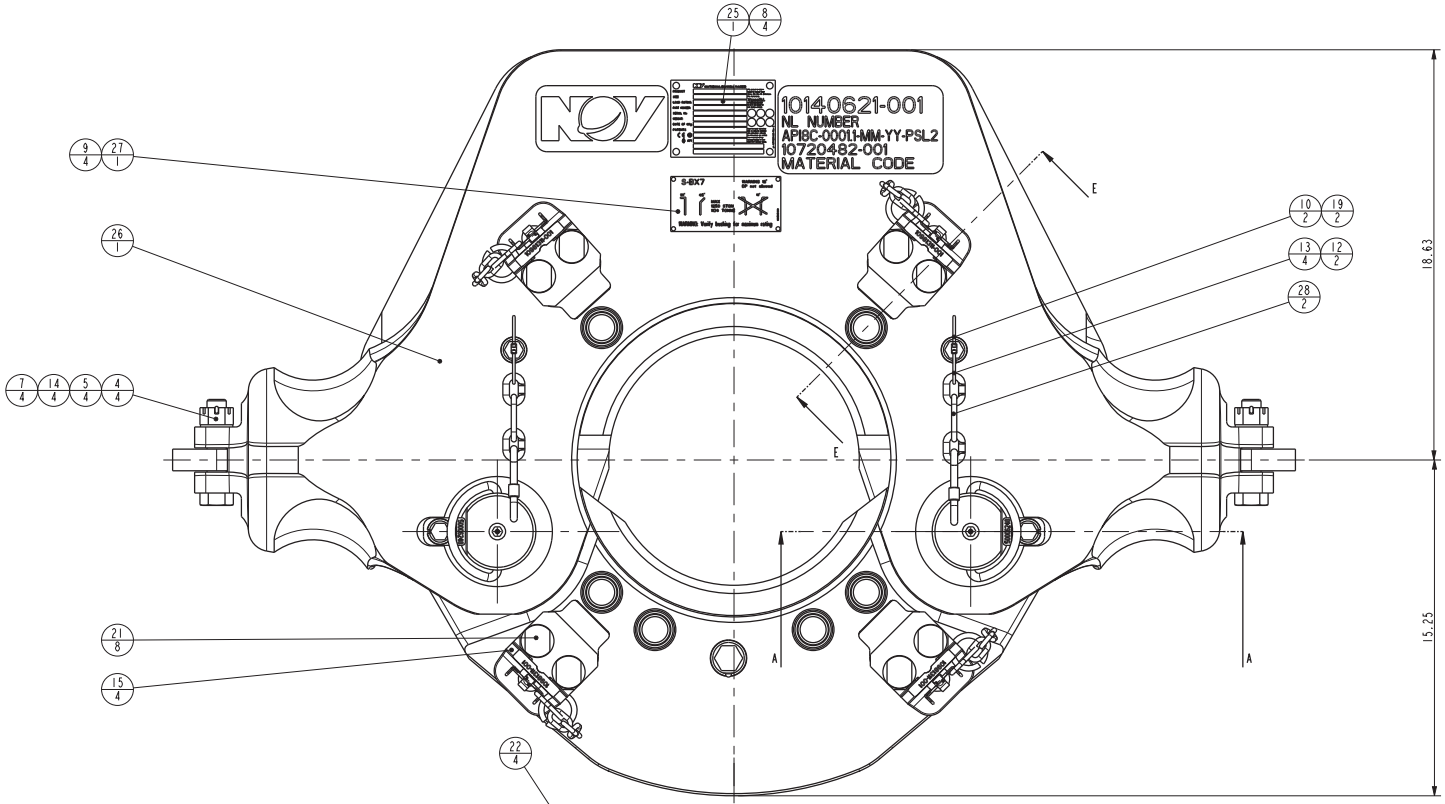

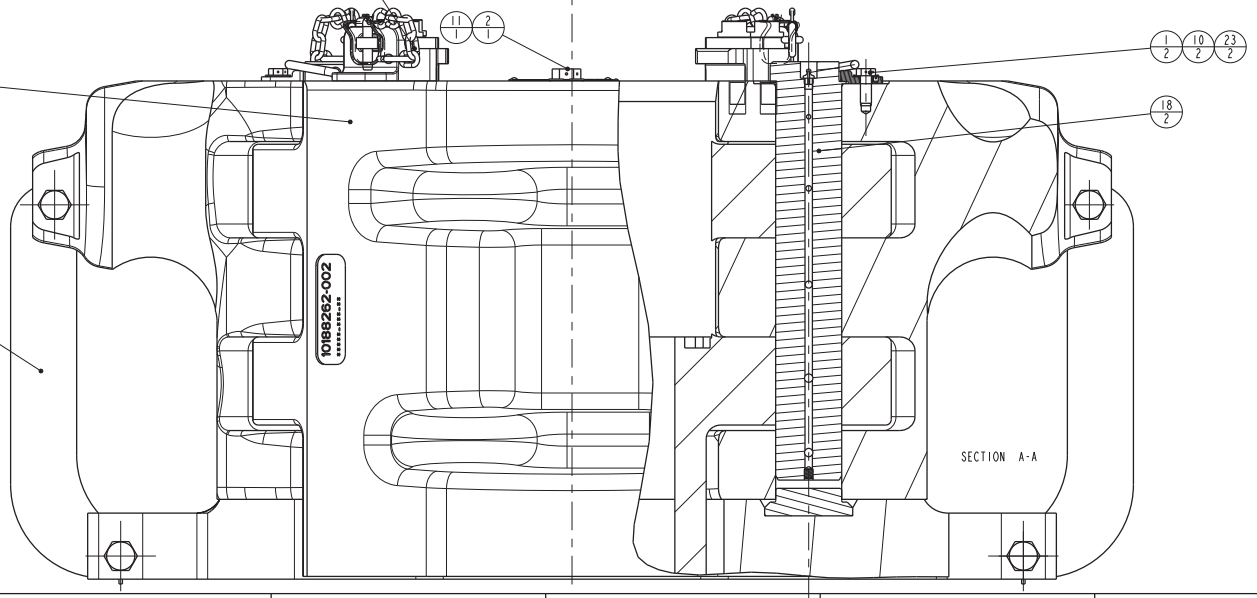

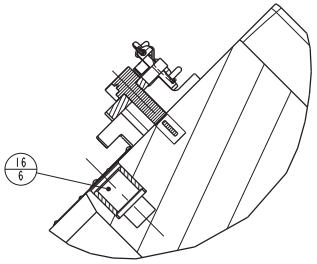

ITEM	QTY	PART NUMBER	DESCRIPTION
1	2	50008-10-C8D	SCREW,CAP-HEX HD (UNC 1/2")
2	2	50012-10-C8D	SCREW,CAP-HEX HD (UNC 3/4")
3	6	50016-36-C8D	SCREW,CAP-HEX HD (UNC 1")
4	4	50514-C	NUT, HEX-SLOTTED 7/8-9
5	4	50814-N-C	WASHER, FLAT 7/8", NARROW
6	6	50916-C	WASHER, LOCK-REGULAR 1.000
7	4	51435-14	COTTER PIN 0.156 X 1.75
8	4	53301-10-6	SCREW, DRIVE 0.179 DIA X 3/8
9	4	53301-4-5	SCREW, DRIVE 0.114 DIA X 5/16
10	4	979485-13	LOCKWASHER S.S. DIN432-
11	2	979485-21	LOCKWASHER S.S. DIN432-
12	2	979855-4	SNAP HOOK STANDARD WITH CLOSED EYE + SCREW NUT
13	4	980293-4	CONNECTING LINK 1/4" CROSBY G-335
14	4	10138372-001	LINK BLOCK BOLT
15	4	10140308-001	BUSHING LOCK ASS'Y BX7&BX9
16	6	10140618-001	Bush Locating Pin Bushing
17	1	10140622-001	EXTENSION PLATE SBX7
18	2	10140624-001	ASS'Y HINGE PIN SBX7
19	2	10140772-001	CABLE-BOLT FOR BX-BUSHINGS
20	2	10141312-001	LINK BLOCK FOR BX5, BX7 & BX9
21	8	10141557	PIN for COVER-PLATE LOCK PS21/30
22	4	10141570	COVER PLATE LOCK RETAINER PS-21/30
23	2	10143398-001	Lock plate Hinge pin BX3
24	1	10188262	MACHINING DOOR SBX7
25	1	10714264-001	Nameplate NOV
26	1	10720482_001	Machining Body SBX7
27	1	10815915-001	Rating Plate BX7
28	2	979878-61	CHAIN, NO 6, 1 LINK

ORACLE PARTNUMBER	10140621-001		
LEGACY PARTNUMBER	50001270Y	REFERENCE ONLY	
MATERIAL			
SURF. FINISH / PAINTSPEC.	P-001	COLOR	RED
WEIGHT	4195.1 Lbs	1902.9 kg	
CREATED BY	Sonneveld, Leon	REVISION	C
CREATED ON	03-Oct-14 01:14:05 AM		
REVISED BY	Sonneveld, Leon		
REVISED ON	03-Oct-14 07:00:30 AM		
TC - ECR	00029170	ASM	

UNLESS OTHERWISE SPECIFIED
TOLERANCES (PER ANSI Y 14.5)
3 PLACE DECIMAL .XXX ± .010
2 PLACE DECIMAL .XX ± .03
1 PLACE DECIMAL .X ± .1
ANGLES ± .5 DEGREE
BREAK SHARP CORNERS .010 ± .005
MACHINED SURFACES 125
TORCHCUT SURFACES 1000
ALL WELD SYMBOLS ACC. TO ISO
ALL WELD DIMENSIONS ARE 2 DIM'S

DO NOT SCALE DOCUMENT
THIS DOCUMENT IS NOV TEAMCENTER CONTROLLED

NATIONAL OILWELL VARCO

SCALE 1:3
PROJ.
UNITS INCH (mm)

TITLE
Ass'y SBX7 - 1250 Ton

SIZE D
DRAWING NO. 50001270
SHEET 1 OF 2

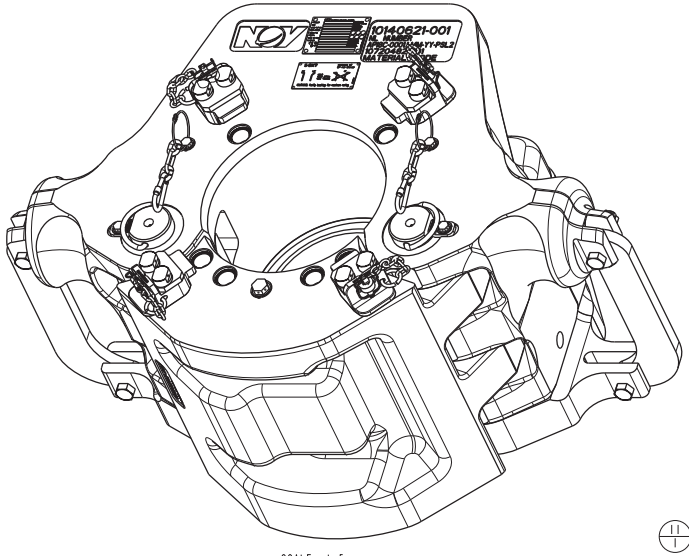

SCALE 1:5

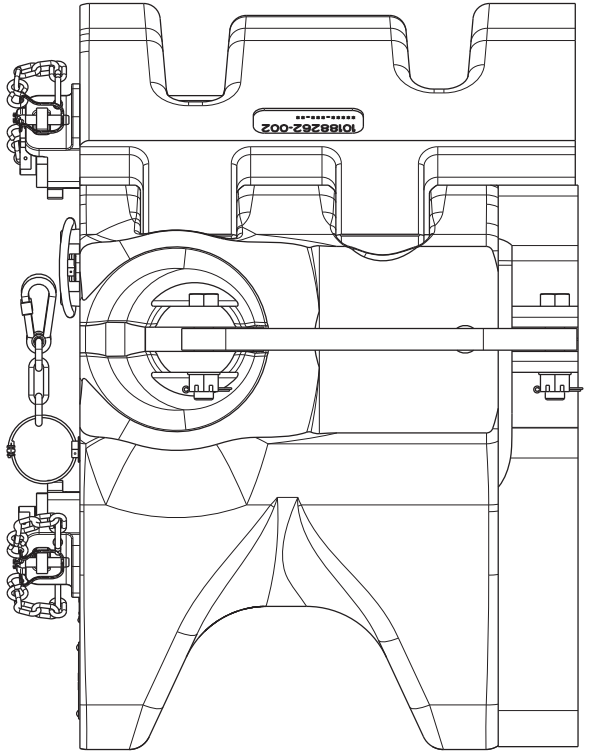

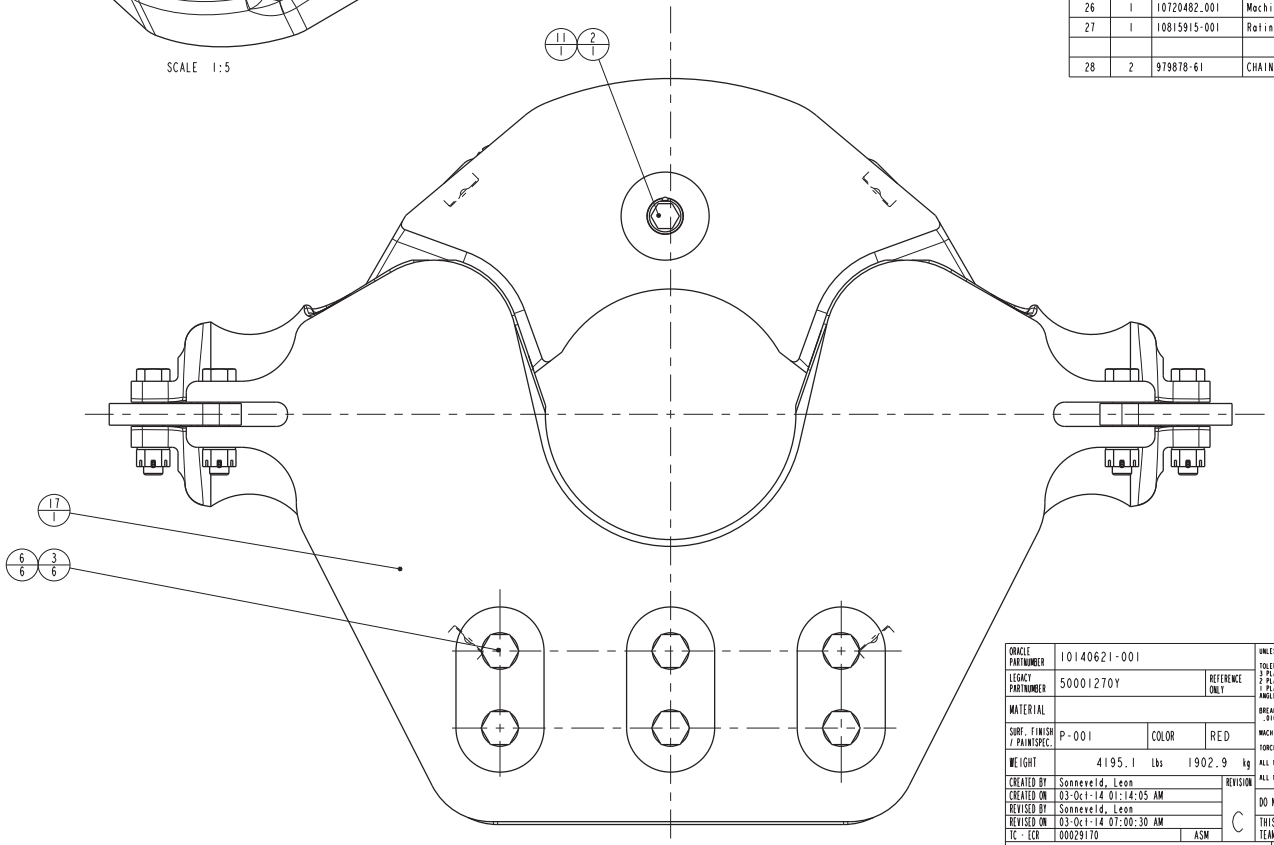

ITEM	QTY	PART NUMBER	DESCRIPTION
1	2	50008-10-C8D	SCREW,CAP-HEX HD (UNC 1/2")
2	2	50012-10-C8D	SCREW,CAP-HEX HD (UNC 3/4")
3	6	50016-36-C8D	SCREW,CAP-HEX HD (UNC 1")
4	4	50514-C	NUT, HEX-SLOTTED 7/8-9
5	4	50814-N-C	WASHER, FLAT 7/8", NARROW
6	6	50916-C	WASHER, LOCK-REGULAR 1.000
7	4	51435-14	COTTER PIN 0.156 X 1.75
8	4	53301-10-6	SCREW, DRIVE 0.179 DIA X 3/8
9	4	53301-4-5	SCREW, DRIVE 0.114 DIA X 5/16
10	4	979485-13	LOCKWASHER S.S. DIN432-
11	2	979485-21	LOCKWASHER S.S. DIN432-
12	2	979855-4	SNAP HOOK STANDARD WITH CLOSED EYE + SCREW NUT
13	4	980293-4	CONNECTING LINK 1/4" CROSBY G-335
14	4	10138372-001	LINK BLOCK BOLT
15	4	10140308-001	BUSHING LOCK ASS'Y BX7&BX9
16	6	10140618-001	Bush Locating Pin Bushing
17	1	10140622-001	EXTENSION PLATE SBX7
18	2	10140624-001	ASS'Y HINGE PIN SBX7
19	2	10140772-001	CABLE-BOLT FOR BX-BUSHINGS
20	2	10141312-001	LINK BLOCK FOR BX5, BX7 & BX9
21	8	10141557	PIN for COVER-PLATE LOCK PS21/30
22	4	10141570	COVER PLATE LOCK RETAINER PS-21/30
23	2	10143398-001	Lock plate Hinge pin BX3
24	1	10188262	MACHINING DOOR SBX7
25	1	10714264-001	Nameplate NOV
26	1	10720482_001	Machining Body SBX7
27	1	10815915-001	Rating Plate BX7
28	2	979878-61	CHAIN, NO 6, 1 LINK

ORACLE PARTNUMBER	10140621-001		
LEGACY PARTNUMBER	50001270Y	REFERENCE ONLY	
MATERIAL			
SURF. FINISH / PAINTSPEC.	P-001	COLOR	RED
WEIGHT	4195.1 Lbs	1902.9 kg	
CREATED BY	Sonneveld, Leon	REVISION	
CREATED ON	03-Oct-14 01:14:05 AM		
REVISED BY	Sonneveld, Leon		
REVISED ON	03-Oct-14 07:00:30 AM		
TC - ECR	00029170	ASM	C

UNLESS OTHERWISE SPECIFIED
TOLERANCES (PER ANSI Y 14.5)
3 PLACE DECIMAL .XXX ± .010
2 PLACE DECIMAL .XX ± .03
1 PLACE DECIMAL .X ± .1
ANGLES ± .5 DEGREE
BREAK SHARP CORNERS .010 ± .005
MACHINED SURFACES 125
TORCHCUT SURFACES 1000
ALL WELD SYMBOLS ACC. TO ISO
ALL WELD DIMENSIONS ARE 2 DIM'S

DO NOT SCALE DOCUMENT

THIS DOCUMENT IS NOV TEAMCENTER CONTROLLED

NATIONAL OILWELL VARCO

SCALE 1:3

UNITS INCH (mm)

PROJ.

TITLE
Ass'y SBX7 - 1250 Ton

SIZE D

DRAWING NO. 50001270

SHEET 2 OF 2

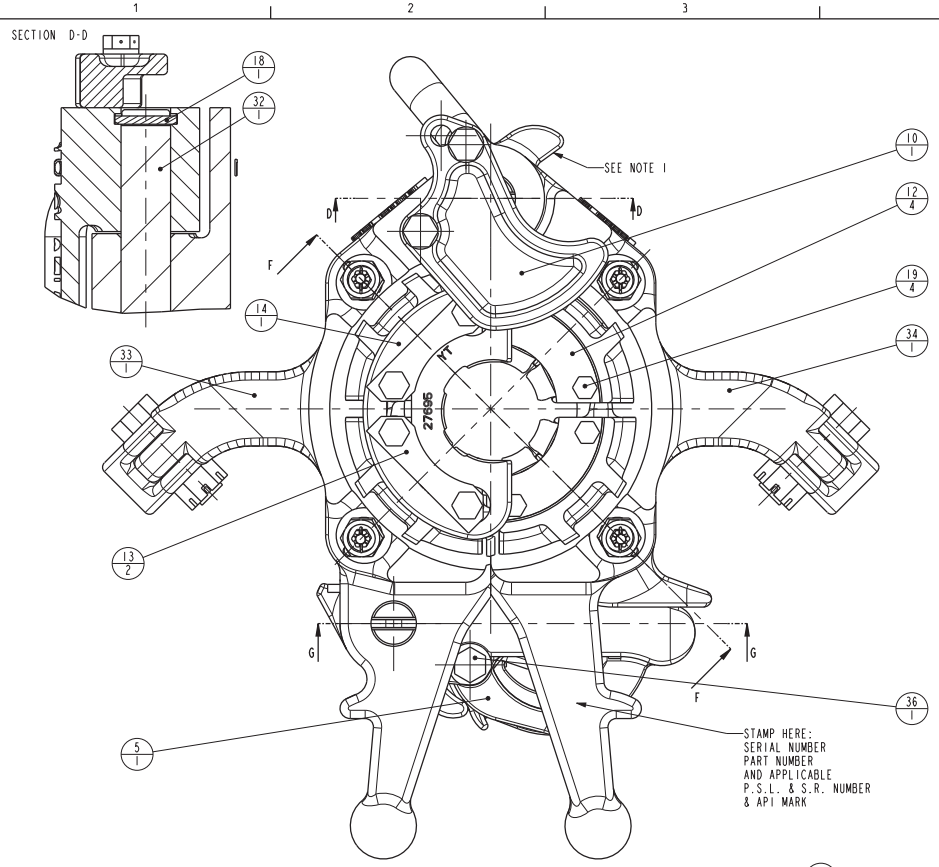

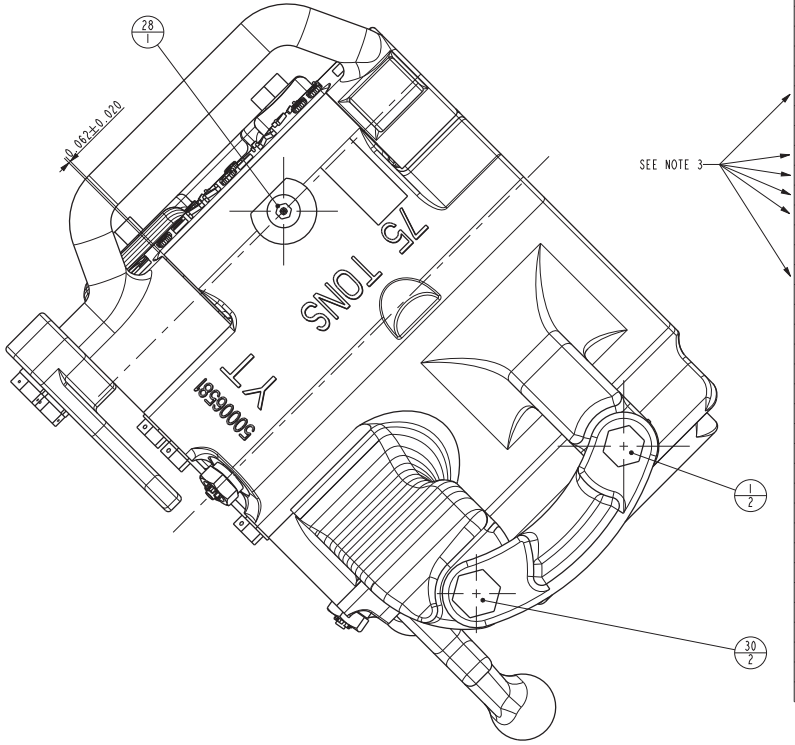

SEE NOTE 3

ITEM	QTY	PART NUMBER	DESCRIPTION
1	2	10146878-001	SCREW CAP-HEX-HD DRILLED SHANK 3/4
2	2	10715139-001	LINK BLOCK
3	1	10136688-001	PIN, DOOR LUG MG-YS-YT
4	1	10718136-001	LATCH CAM, TYPE AA-MAA-YT-YC ELEVATOR
5	1	10136729-001	Latch Lock Type A&Y Elevator
6	1	10136730-001	COMPRESSION SPRING, D 13910
7	1	10136852	MACHINING LATCH SLIP ELEVATOR
8	4	10721359	SLIP, 3 1/2 TUBING, YT SLIP ELEVATOR
9	4	10138610-001	COMPRESSION SPRING, D 13910
10	1	10138624-001	GUIDE PLATE
11	8	10138673-001	SPACER - SLIP INSERT - YT ELEVATOR
12	4	10138957-001	RETAINER INSERT
13	2	10138959-001	RETAINER SETTING RING YT ELEVATOR SLIPS
14	1	27695	2 7/8 SLIP SETTING RING
15	4	10138964-001	RUBBER BUSHING FOR YT SLIP SETTING RING
16	4	10138965-001	SHOULDER SCREW, YT SETTING RING
17	24	30358	3 1/2" TO 2 7/8" BJ REDUCING INSERT
18	2	10139543-001	LOCK BAR 1/4" x 1 7/8"
19	4	50007-6-C8D	SCREW,CAP-HEX HD (UNC 7/16")
20	2	50010-20-C8D	SCREW,CAP-HEX HD (UNC 5/8")
21	1	50510-C	NUT, HEX-SLOTTED 5/8-11
22	2	50512-C	NUT, HEX-SLOTTED 3/4-10
23	2	50514-C	NUT, HEX-SLOTTED 7/8-9
24	2	50910-C	WASHER, LOCK-REGULAR 0.625
25	4	51112-C	WASHER, LOCK-STEEL
26	3	51402-12	COTTER PIN 0.125X1.5
27	2	51402-16	COTTER PIN 0.125 x 1.9
28	1	53201	FITTING, GREASE, STRAIGHT
29	1	53204	STRAIGHT GREASE FITTING
30	2	939099-97	SCREW CAP-HEX-HD DRILLED SHANK 7/8
31	4	50003694	SLIP PIN ASSY FOR YT ELEVATOR (50006582Y)
32	1	10143783-001	HINGE PIN YT ELEVATOR
33	1	50006580	MACHINING BODY YT ELEVATOR PSL1 75 T 1.1/4 - 3.1/2"
34	1	50006581	MACHINING DOOR YT ELEVATOR PSL1 75 T 1.1/4 - 3.1/2"
35	1	10143789-001	LATCH PIN YT ELEVATOR
36	1	10143791-001	SCREW,CAP-HEX HD 5/8"-11 UNC L=7.5"

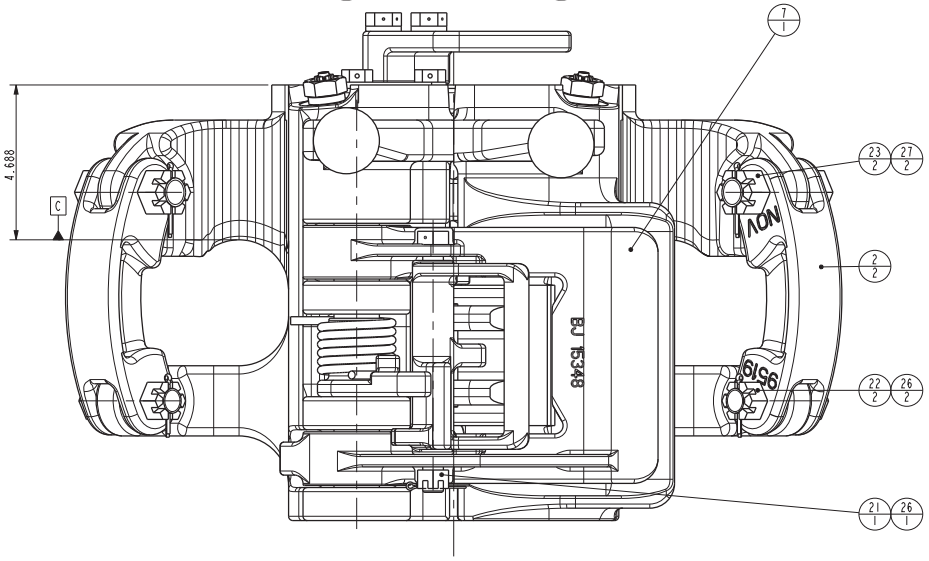

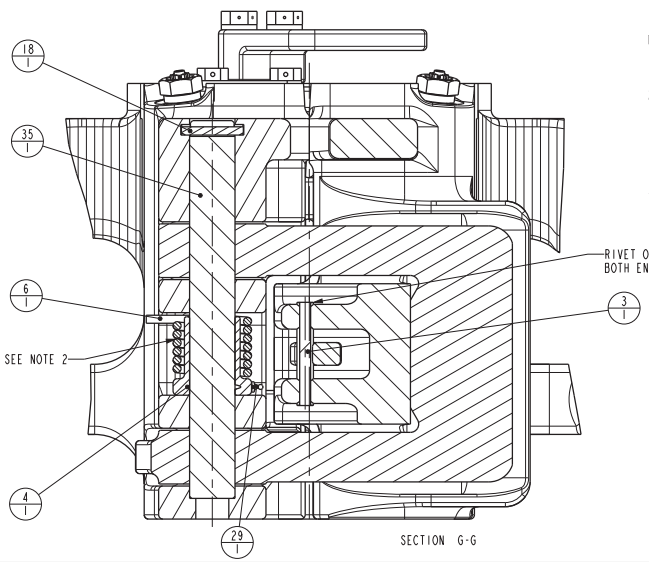

NOTES:
1) Ø5" TUBULAR MUST PASS BETWEEN LATCH & DOOR WHEN ELEVATOR IS IN FULL OPEN POSITION. GRIND BODY & DOOR STOP TO ACCOMPLISH THIS.
2) THE LATCH LOCK LEVER STARTS TO MOVE AT 36±3 POUNDS PULL. THE LATCH STARTS TO MOVE AT 61±4 POUNDS PULL.
   A) LATCH LOCK AND LATCH PULL MUST BE CHECKED WITHOUT CONTACT OF LATCH ON LATCH LUG.
   B) PULL MUST BE CHECKED WITH GAGE AT RIGHT ANGELS TO LATCH LOCK HANDLE.
   C) PULL FOR BOTH THE LATCH LOCK AND LATCH IS MEASURED FROM THE LATCH LOCK HANDLE WITH THE UNIT AS A COMPLETED ASSEMBLY.
3) ITEM 8, 11, 12, 13, 14 & 17 DEPENDS ON THE PIPE SIZE TO HANDLE WITH THE ELEVATOR, SEE TABLE ON SHEET 2 FOR THE PART NUMBERS.

ORACLE PARTNUMBER	10114191		
LEGACY PARTNUMBER	50006582	REFERENCE ONLY	
MATERIAL			
SURF. FINISH / PAINTSPEC.	-	COLOR	-
WEIGHT	473.9 Lbs	214.9 kg	
CREATED BY	Rene Hommes	REVISION	E
CREATED ON	13-Apr-15 01:38:52 PM		
REVISED BY	Rene Hommes		
REVISED ON	14-Apr-15 09:55:12 AM		
TC - ECR	00035886		

UNLESS OTHERWISE SPECIFIED
TOLERANCES (PER ANSI Y 14.5)
3 PLACE DECIMAL .XXX ± .010
2 PLACE DECIMAL .XX ± .03
1 PLACE DECIMAL .X ± .1
ANGLES ± .5 DEGREE
BREAK SHARP CORNERS .010 ± .005
MACHINED SURFACES 125
TORCHCUT SURFACES 1000
ALL WELD SYMBOLS ACC. TO ISO
ALL WELD DIMENSIONS ARE 2 DIM'S

DO NOT SCALE DOCUMENT
THIS DOCUMENT IS NOV TEAMCENTER CONTROLLED

NATIONAL OILWELL VARCO

SCALE 1:2
PROJ.
UNITS INCH (mm)

TITLE
ASS'Y YT ELEVATOR PSL1 75 T 1.1/4 - 3.1/2"

SIZE D
DRAWING NO. 50006582
SHEET 1 OF 2

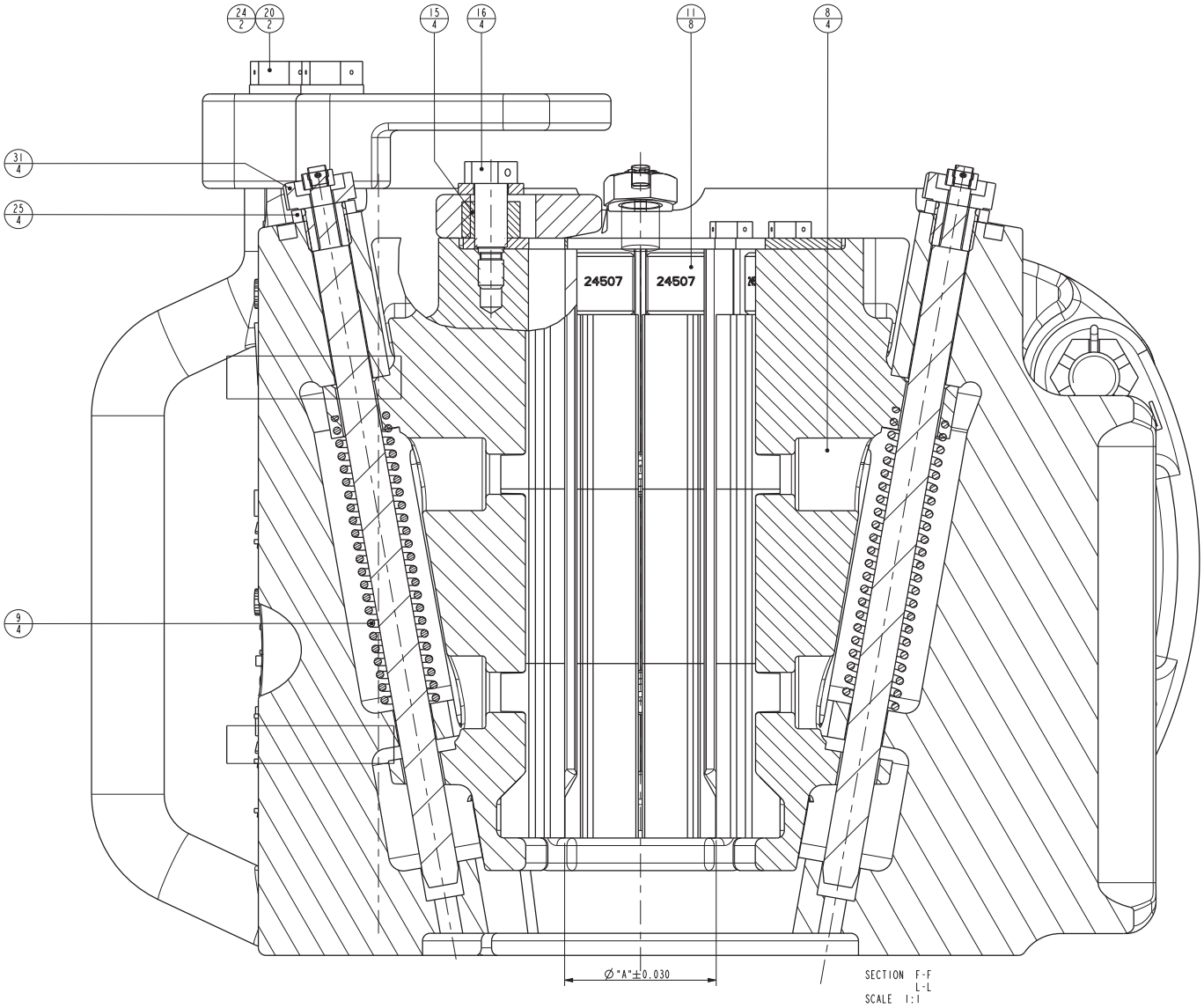

ITEM	QTY.	SIZE	1.250"	1.315"	1.660"	1.900"	2.000"	2.063"	2.375"	2.875"	2.875"	3.250"	3.500"	SIZE
		MAKE FROM SLIP SIZE	FROM 2 7/8	FROM 2 7/8	FROM 2 7/8	FROM 2 7/8	FROM 2 7/8	FROM 2 7/8	FROM 2 7/8	FROM 2 7/8	FROM 3 1/2	FROM 3 1/2	FROM 3 1/2	MAKE FROM SLIP SIZE
	4	SLIP ASSEMBLY	23108-12	23108-11	23108-10	23108-9	23108-8	23108-7	23108-6	23108-4	23108-3	23108-314	23108-5	SLIP ASSEMBLY
8	4	SLIPS	23108-2	23108-2	23108-2	23108-2	23108-2	23108-2	23108-2	23108-2	23108	23108	23108	SLIPS
17	24	INSERTS	52734	29259	29258	29257	29256	29256	29255	24773	30358	10690905	24744	INSERTS
11	8	INSERT SPACER	24508	24508	24508	24508	24508	24508	24508	24508	24507	24507	24507	INSERT SPACER
12	4	INSERT RETAINER	27451	27451	27451	27451	27451	27451	27451	27451	27530	27530	27530	INSERT RETAINER
13	2	SETTING RING RETAINER	27507	27507	27507	27507	27507	27507	27507	27507	27546	27546	27546	SETTING RING RETAINER
14	1	SETTING RING	52743	29001	27810	27811	28821	27812	27694	27695	27695	10690903	27813	SETTING RING
		CHECKING DIMENSION "A"	1.442"	1.507"	1.852"	2.092"	2.192"	2.254"	2.566"	3.066"	3.066"	3.476"	3.682"	CHECKING DIMENSION "A"

ORACLE PARTNUMBER	10114191		
LEGACY PARTNUMBER	50006582	REFERENCE ONLY	
MATERIAL			
SURF. FINISH / PAINTSPEC.	-	COLOR	-
WEIGHT	473.9 Lbs	214.9 kg	
CREATED BY	Rene Hommes	REVISION	
CREATED ON	13-Apr-15 01:38:52 PM	E	
REVISED BY	Rene Hommes		
REVISED ON	14-Apr-15 09:55:12 AM		
TC - ECR	00035886		

UNLESS OTHERWISE SPECIFIED
TOLERANCES (PER ANSI Y 14.5)
3 PLACE DECIMAL .XXX ± .010
2 PLACE DECIMAL .XX ± .03
1 PLACE DECIMAL .X ± .1
ANGLES ± .5 DEGREE
BREAK SHARP CORNERS .010 ± .005
MACHINED SURFACES 250
TORCHCUT SURFACES 1000
ALL WELD SYMBOLS ACC. TO ISO
ALL WELD DIMENSIONS ARE Z DIM'S

DO NOT SCALE DOCUMENT
THIS DOCUMENT IS NOV TEAMCENTER CONTROLLED

SCALE 1:2
UNITS INCH (mm)
PROJ.

NATIONAL OILWELL VARCO

TITLE: ASS'Y YT ELEVATOR PSLI 75 T 1.1/4 - 3.1/2"

SIZE: D | DRAWING NO. 50006582 | SHEET 2 OF 2

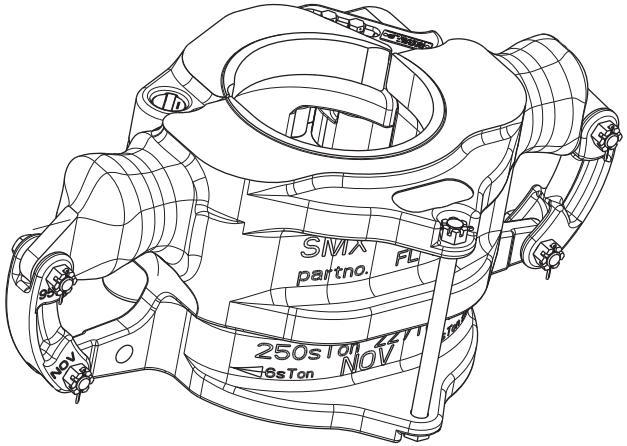

SCALE 1:3

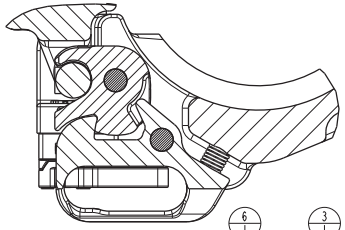

SECTION STOP-PIN-STOP-PIN

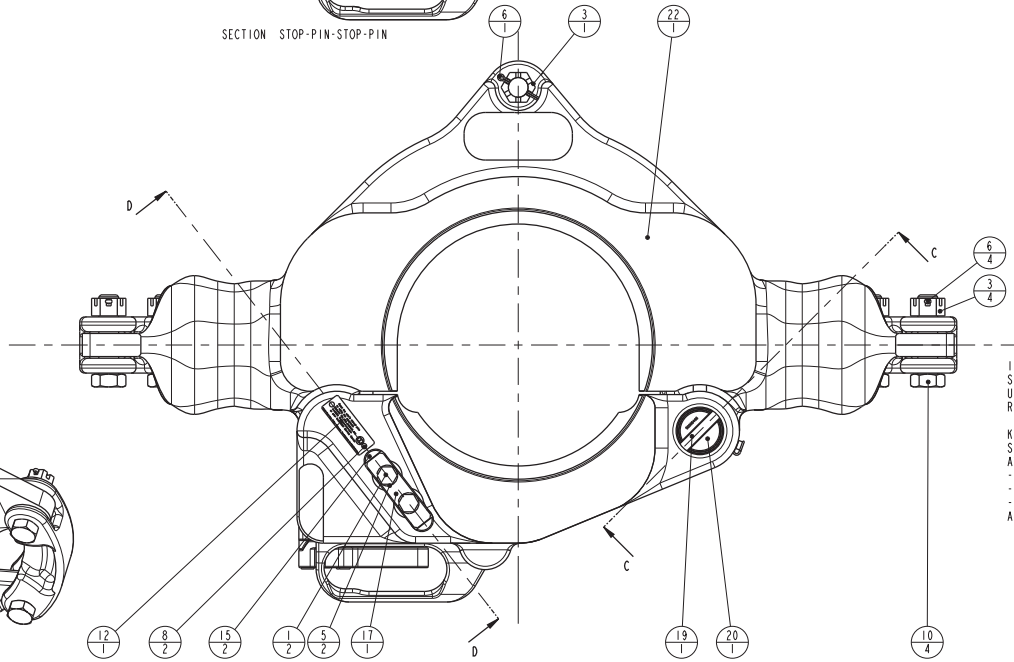

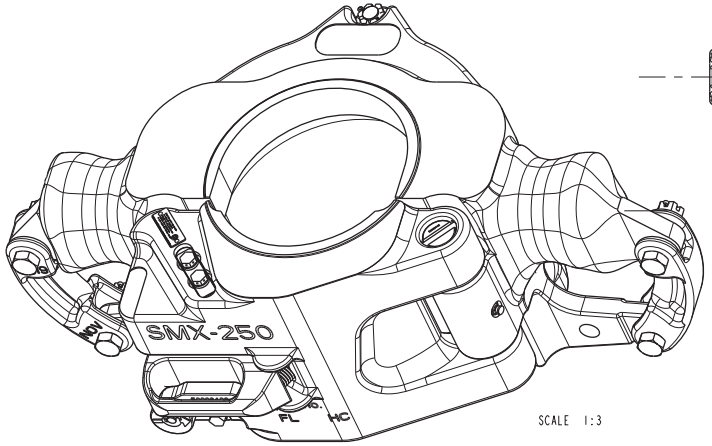

SCALE 1:3

ITEM	QTY	PART NUMBER	DESCRIPTION
1	5	50007-12-C8D	SCREW,CAP-HEX HD (UNC 7/16")
2	1	50510-C	NUT, HEX-SLOTTED 5/8-11
3	5	50512-C	NUT, HEX-SLOTTED 3/4-10
4	1	50810-N-C	WASHER, FLAT 5/8", NARROW
5	5	51007-C	WASHER, LOCK-STEEL
6	6	51402-12	COTTER PIN 0.125X1.5
7	4	53201	FITTING, GREASE, STRAIGHT
8	2	53301-4-5	SCREW, DRIVE 0.114 DIA X 5/16
9	1	939099-586	SCREW CAP-HEX-HD DRILLED SHANK 3/4" x 11"
10	4	939099-96	SCREW CAP-HEX-HD DRILLED SHANK 3/4-10UNC x 3"
11	4	979770-56	40x44x50 SY Bushing
12	1	10140060-001	INFO & READ MANUAL PLATE
13	1	10143503-001	SMX CAMLATCH MACHINING
14	1	10143507-001	SMX CAMLATCHLOCK MACHINING
15	2	10143511-001	SMX CAMLATCH/LOCK-PIN
16	1	10143513-001	VERIFICATION LOCK MACHINING
17	1	10143521-001	LOCK STRIP
18	1	10143522-001	LOCK STOP BLOCK MACH.
19	1	10143603-001	LOCK BAR SMX
20	1	10143605-001	HINGE PIN
21	2	10715139-001	LINK BLOCK
22	1	10718264	ASSY SMX 6" - 9" 250TON MACHINING
23	2	59000333	SMX COMPRESSION SPRING D-275-A RVS
24	1	59000334	SMX COMPRESSION SPRING D-268-B
25	4	59000507	GREASE CAP

ITEMS 13 AND 14; "CAM LATCH" AND "CAM LATCH LOCK"
SHALL BE USED AS A SET AND BOTH ARE MARKED WITH AN IDENTICAL
UNIQUE "E" NUMBER.
REPLACE AS SET!

KIT CONTAINS ONE CAM LATCH- AND ONE CAM LATCH LOCK
SUPPLIED WITH A GREASE NIPPLE.
AVAILABLE KITS:
-10143607-001 / 50006449 "CAM LATCH /- LOCK-I KIT SMX"
-10143609-001 / 50006449-BT "CAM LATCH /- LOCK-I-BT KIT SMX" FOR LOW TEMPERATURE
-10143610-001 / 50006449-SR4 "CAM LATCH /- LOCK-I KIT SMX-SR4" WITH
ADDITIONAL VOLUMETRIC EXAMINATION OF CASTINGS.

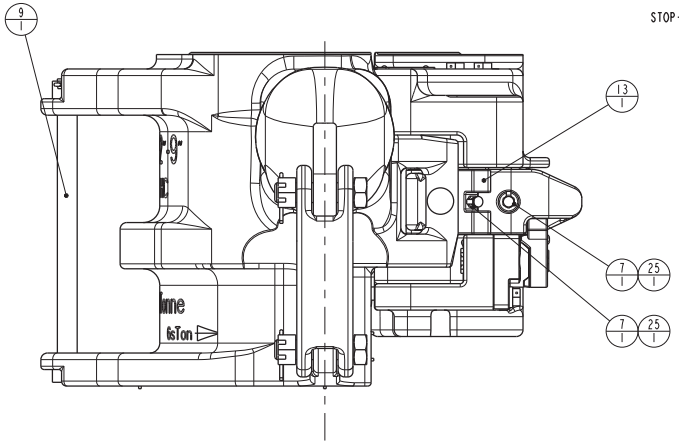

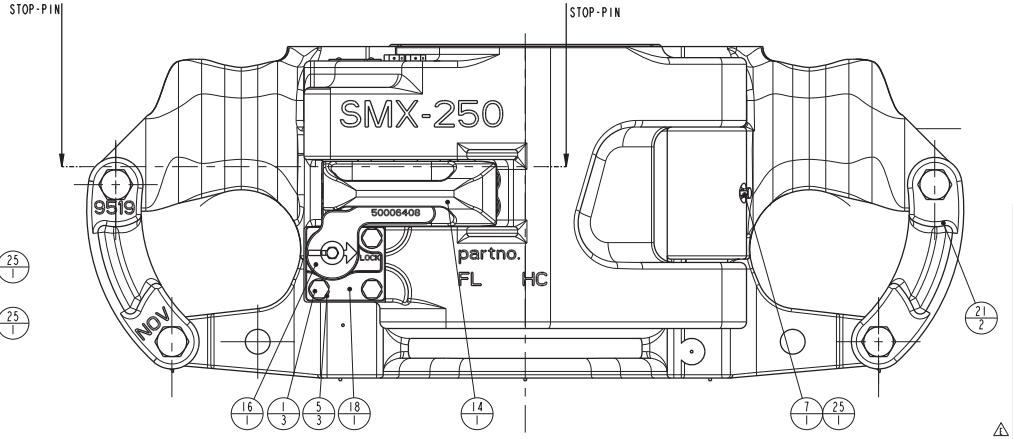

BOLT MOUNTING NOTES:

UNLESS WHEN SECURED BY A SPLIT PIN,
ALL BOLTS MUST BE LOCKWIRED AS PER
SHOWN EXAMPLE.

TO PREVENT MUD INGRESS, ALL BOLTS
NEED TO BE ASSEMBLED WITH A LIBERAL
AMOUNT OF WATER RESISTANT GREASE
ON THE THREAD.

ORACLE PARTNUMBER	10143523		
LEGACY PARTNUMBER	50006426	REFERENCE ONLY	
MATERIAL			
SURF. FINISH / PAINTSPEC.	-	COLOR	RED GREEN 10,15,17
WEIGHT	473.0 Lbs	214.6 kg	
CREATED BY	Cees de Laat	REVISION	
CREATED ON	08-Mar-07		
REVISED BY	Mike Daerden		
REVISED ON	17-Dec-14 01:06:18 PM		
TC - ECR	00031582	ASM	

UNLESS OTHERWISE SPECIFIED
TOLERANCES (PER ANSI Y 14.5)
3 PLACE DECIMAL .XXX ± .010
2 PLACE DECIMAL .XX ± .03
1 PLACE DECIMAL .X ± .1
ANGLES ± .5 DEGREE
BREAK SHARP CORNERS .010 ± .005
MACHINED SURFACES 125
TORCHCUT SURFACES 1000
ALL WELD SYMBOLS ACC. TO ISO
ALL WELD DIMENSIONS ARE 2 DIM'S

DO NOT SCALE DOCUMENT
THIS DOCUMENT IS NOV TEAMCENTER CONTROLLED

NOV
NATIONAL OILWELL VARCO

SCALE 2:5 | PROJ.
UNITS INCH (mm)

TITLE: ASSY SMX 5.1/2"-9" 250TON
SIZE: D
DRAWING NO. 50006426
SHEET 1 OF 2

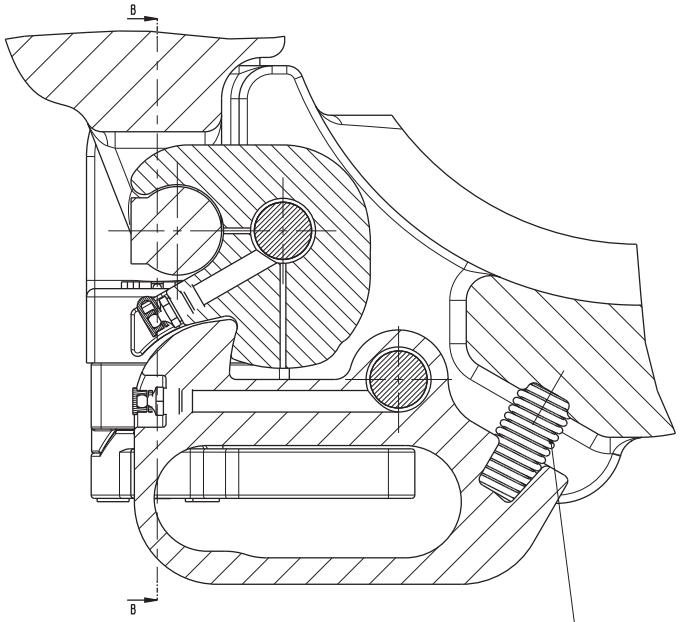

SECTION A-A
SCALE 1:1

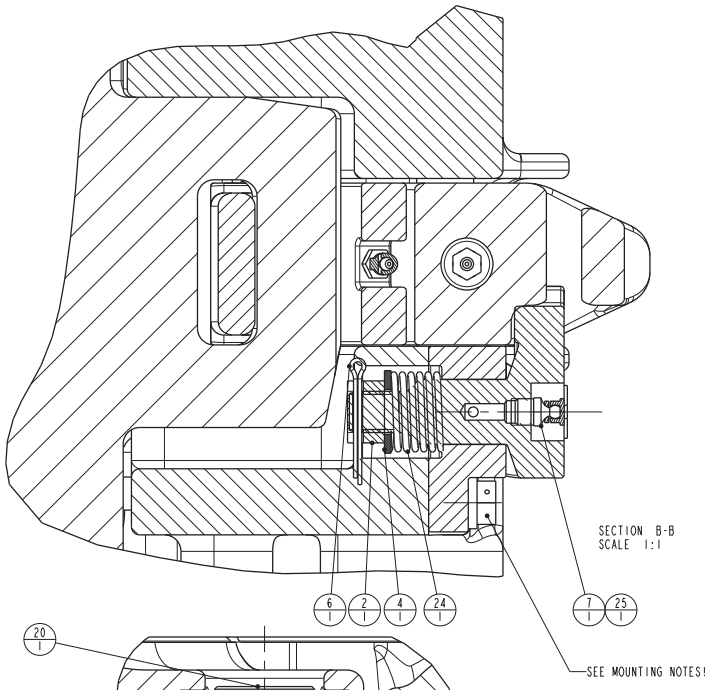

SECTION B-B
SCALE 1:1

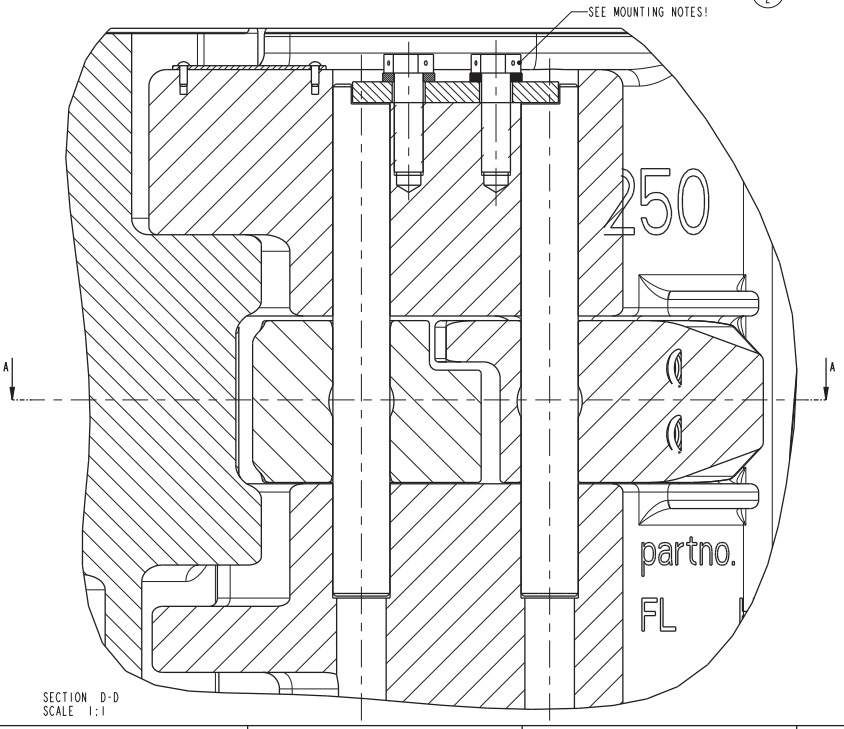

SECTION D-D
SCALE 1:1

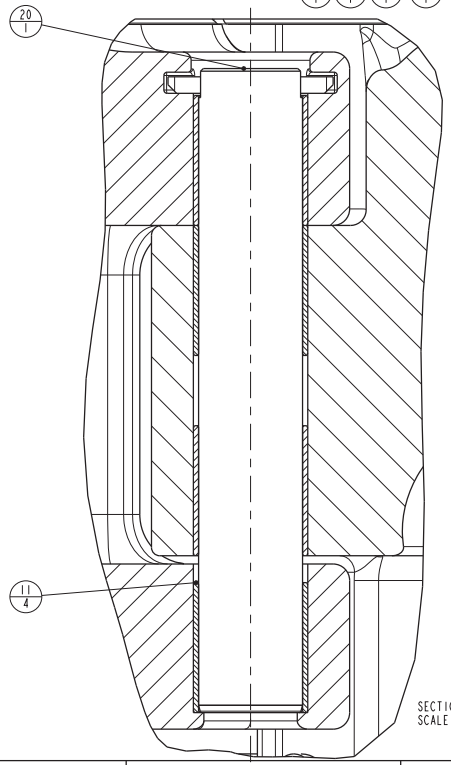

SECTION C-C
SCALE 1:1

ITEM	QTY	PART NUMBER	DESCRIPTION
1	5	50007-12-C8D	SCREW,CAP-HEX HD (UNC 7/16")
2	1	50510-C	NUT, HEX-SLOTTED 5/8-11
3	5	50512-C	NUT, HEX-SLOTTED 3/4-10
4	1	50810-N-C	WASHER, FLAT 5/8", NARROW
5	5	51007-C	WASHER, LOCK-STEEL
6	6	51402-12	COTTER PIN 0.125X1.5
7	4	53201	FITTING, GREASE, STRAIGHT
8	2	53301-4-5	SCREW, DRIVE 0.114 DIA X 5/16
9	1	939099-586	SCREW CAP-HEX-HD DRILLED SHANK 3/4" x 11"
10	4	939099-96	SCREW CAP-HEX-HD DRILLED SHANK 3/4-10UNC x 3"
11	4	979770-56	40x44x50 SY Bushing
12	1	10140060-001	INFO & READ MANUAL PLATE
13	1	10143503-001	SMX CAMLATCH MACHINING
14	1	10143507-001	SMX CAMLATCHLOCK MACHINING
15	2	10143511-001	SMX CAMLATCH/LOCK-PIN
16	1	10143513-001	VERIFICATION LOCK MACHINING
17	1	10143521-001	LOCK STRIP
18	1	10143522-001	LOCK STOP BLOCK MACH.
19	1	10143603-001	LOCK BAR SMX
20	1	10143605-001	HINGE PIN
21	2	10715139-001	LINK BLOCK
22	1	10718264	ASSY SMX 6" - 9" 250TON MACHINING
23	2	59000333	SMX COMPRESSION SPRING D-275-A RVS
24	1	59000334	SMX COMPRESSION SPRING D-268-B
25	4	59000507	GREASE CAP

ORACLE PARTNUMBER	10143523		
LEGACY PARTNUMBER	50006426	REFERENCE ONLY	
MATERIAL			
SURF. FINISH / PAINTSPEC.	-	COLOR	RED GREEN 10,15,17
WEIGHT	473.0 Lbs	214.6 kg	
CREATED BY	Cees de Laat	REVISION	
CREATED ON	08-Mar-07		
REVISED BY	Mike Daerden		
REVISED ON	17-Dec-14 01:06:18 PM		
TC - ECR	00031582	ASM	

UNLESS OTHERWISE SPECIFIED
TOLERANCES (PER ANSI Y 14.5)
3 PLACE DECIMAL .XXX ± .010
2 PLACE DECIMAL .XX ± .03
1 PLACE DECIMAL .X ± .1
ANGLES ± .5 DEGREE
BREAK SHARP CORNERS .010 ± .005
MACHINED SURFACES 125
TORCHCUT SURFACES 1000
ALL WELD SYMBOLS ACC. TO ISO
ALL WELD DIMENSIONS ARE Z DIM'S

DO NOT SCALE DOCUMENT
THIS DOCUMENT IS NOV TEAMCENTER CONTROLLED

NATIONAL OILWELL VARCO

SCALE 2:5
PROJ.
UNITS INCH (mm)

TITLE
ASSY SMX 5.1/2"-9" 250TON

SIZE D
DRAWING NO. 50006426
SHEET 2 OF 2

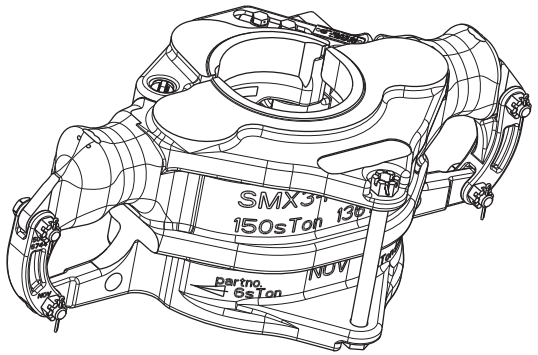

SCALE 1:3

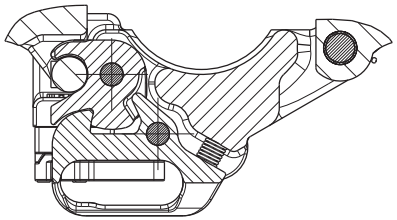

SECTION STOP-PIN-STOP-PIN

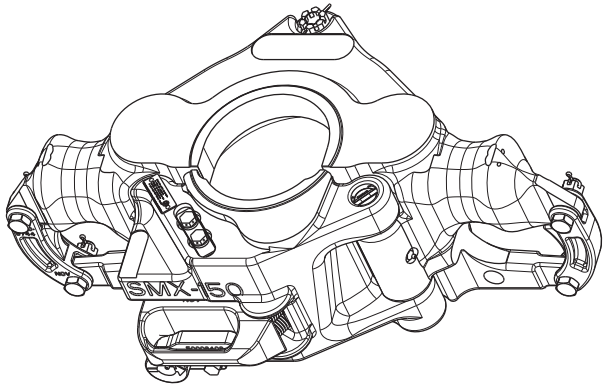

SCALE 1:3

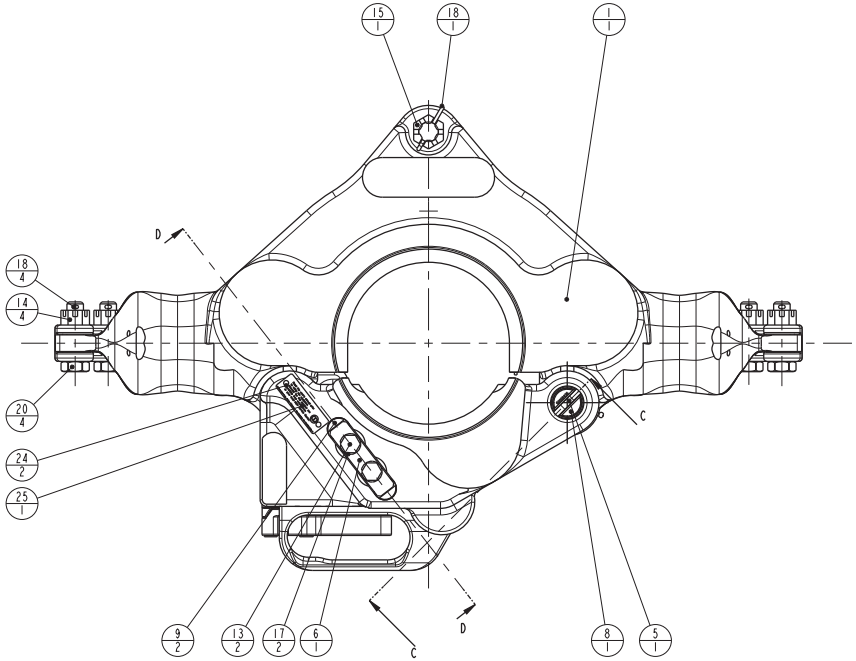

ITEM	QTY	PART NUMBER	DESCRIPTION
1	1	10718384	ASSY SMX 3-1/2" - 5-3/4" MACHINING
2	1	10143503-001	SMX CAMLATCH MACHINING
3	1	10143507-001	SMX CAMLATCHLOCK MACHINING
4	1	10143513-001	VERIFICATION LOCK MACHINING
5	1	10143518-001	SMX HINGE PIN LOCK BAR 1/4" x 2"
6	1	10143521-001	LOCK STRIP
7	1	10143522-001	LOCK STOP BLOCK MACH.
8	1	10143566-001	HINGE PIN SMX 3-1/2 - 5-3/4"
9	2	10143567-001	CAMLATCH LOCKPIN SMX
10	2	10709666-001	LINK BLOCK CASTING SMX 150
11	2	59000333	SMX COMPRESSION SPRING D-275-A RVS
12	1	59000334	SMX COMPRESSION SPRING D-268-B
13	5	50007-12-C8D	SCREW,CAP-HEX HD (UNC 7/16")
14	5	50510-C	NUT, HEX-SLOTTED 5/8-11
15	1	50512-C	NUT, HEX-SLOTTED 3/4-10
16	1	50810-N-C	WASHER, FLAT 5/8", NARROW
17	5	51007-C	WASHER, LOCK-STEEL
18	6	51402-12	COTTER PIN 0.125X1.5
19	1	939099-546	SCREW,CAP-HEX HD (UNC 3/4")X8 1/2" DRILLED SHANK
20	4	939099-65	SCREW CAP-HEX-HD DRILLED SHANK 7/8
21	4	979770-2820	GLACIER PM2820SY 28/32-20 mm
22	3	979770-2825	GLACIER PM2825SY 28/32-25 mm
23	4	53201	FITTING, GREASE, STRAIGHT
24	2	53301-4-5	SCREW, DRIVE 0.114 DIA X 5/16
25	1	10140060-001	INFO & READ MANUAL PLATE

ITEMS 2 AND 3; "CAM LATCH" AND "CAM LATCH LOCK" SHALL BE USED AS A SET AND BOTH ARE MARKED WITH AN IDENTICAL UNIQUE "E" NUMBER.
REPLACE AS SET!

KIT 50006449% CONTAINS ONE CAM LATCH- AND ONE CAM LATCH LOCK SUPPLIED WITH A GREASE NIPPLE.
AVAILABLE KITS:
-50006449 "CAM LATCH /- LOCK-I KIT SMX"
-50006449-BT "CAM LATCH /- LOCK-I-BT KIT SMX" FOR LOW TEMPERATURE
-50006449-SR4 "CAM LATCH /- LOCK-I KIT SMX-SR4" WITH ADDITIONAL VOLUMETRIC EXAMINATION OF CASTINGS.

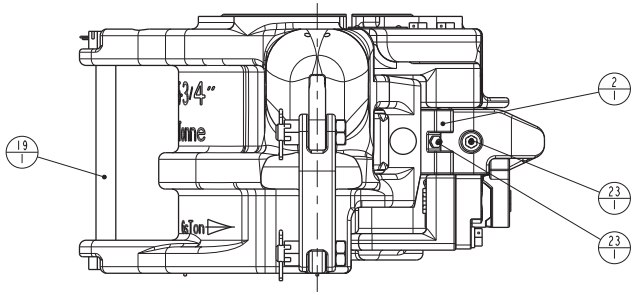

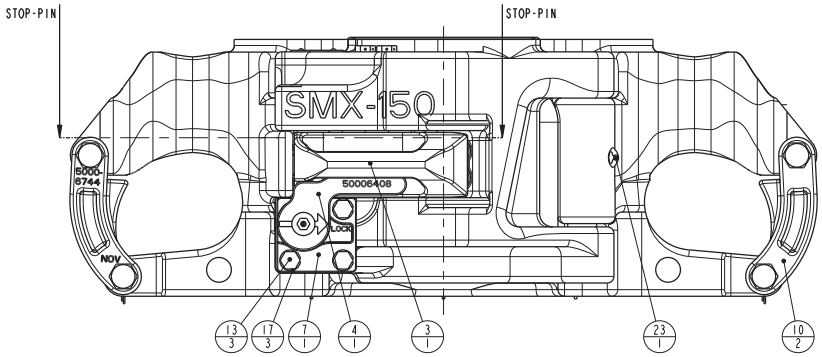

BOLT MOUNTING NOTES:

UNLESS WHEN SECURED BY A SPLIT PIN, ALL BOLTS MUST BE LOCKWIRED AS PER ABOVE SHOWN EXAMPLE.

TO PREVENT MUD INGRESS, ALL BOLTS NEED TO BE ASSEMBLED WITH A LIBERAL AMOUNT OF WATER RESISTANT GREASE ON THE THREAD.

ORACLE PARTNUMBER	10143542		
LEGACY PARTNUMBER	50006430	REFERENCE ONLY	
MATERIAL			
SURF. FINISH / PAINTSPEC.	-	COLOR	RED GREEN 8,16,17
WEIGHT	280.9 Lbs	127.4 kg	
CREATED BY	Cees de Laat	REVISION	
CREATED ON	03-Aug-06		
REVISED BY	Rene Hommes	F	
REVISED ON	09-Apr-15 10:00:51 AM		
TC - ECR	00025554	ASM	

UNLESS OTHERWISE SPECIFIED
TOLERANCES (PER ANSI Y 14.5)
3 PLACE DECIMAL .XXX ± .010
2 PLACE DECIMAL .XX ± .03
1 PLACE DECIMAL .X ± .1
ANGLES ± .5° DEGREE
BREAK SHARP CORNERS .010 ± .005
MACHINED SURFACES 125
TORCHCUT SURFACES 1000
ALL WELD SYMBOLS ACC. TO ISO
ALL WELD DIMENSIONS ARE 2 DIM'S

DO NOT SCALE DOCUMENT
THIS DOCUMENT IS NOV TEAMCENTER CONTROLLED

NOV
NATIONAL OILWELL VARCO

SCALE 2:5
UNITS INCH (mm)
PROJ.

TITLE
ASSY SMX 3-1/2" - 5-3/4" 150TON

SIZE D
DRAWING NO. 50006430
SHEET 1 OF 2

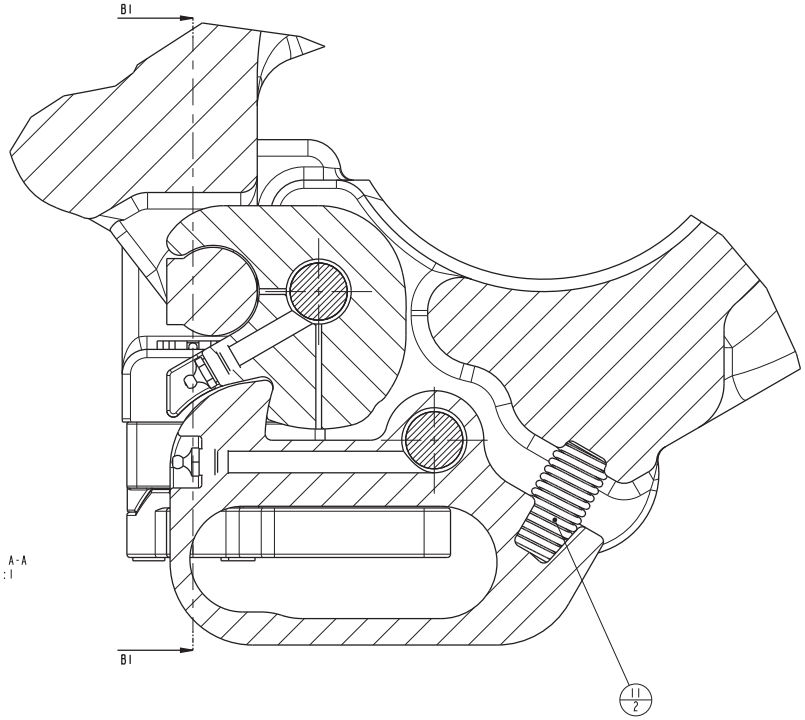

SECTION A-A
SCALE 1:1

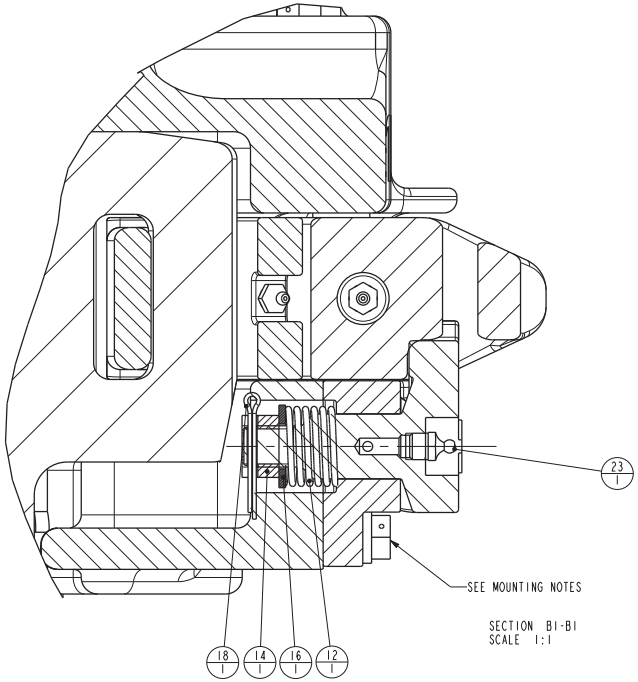

SECTION B1-B1
SCALE 1:1

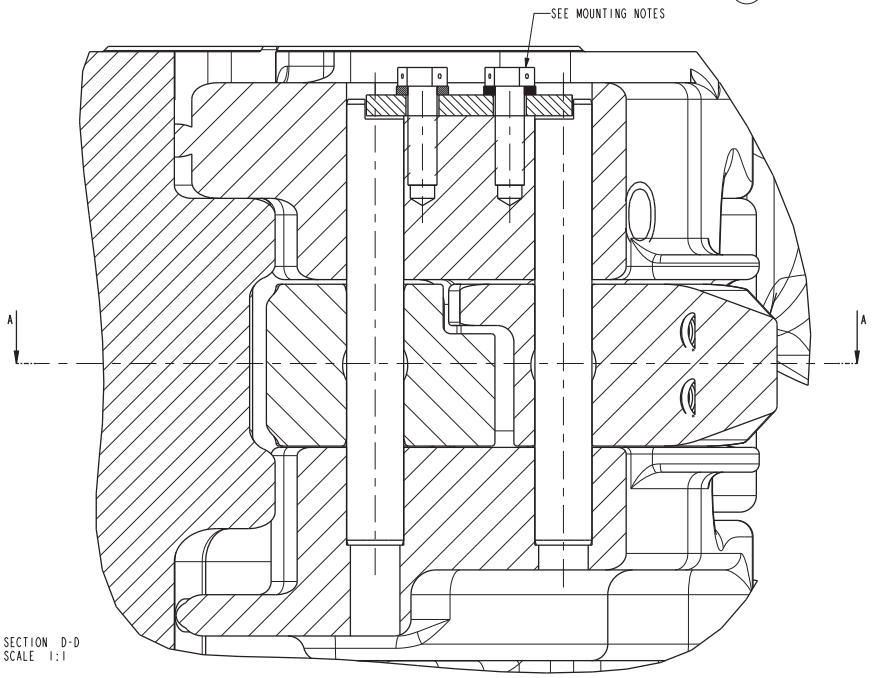

SECTION D-D
SCALE 1:1

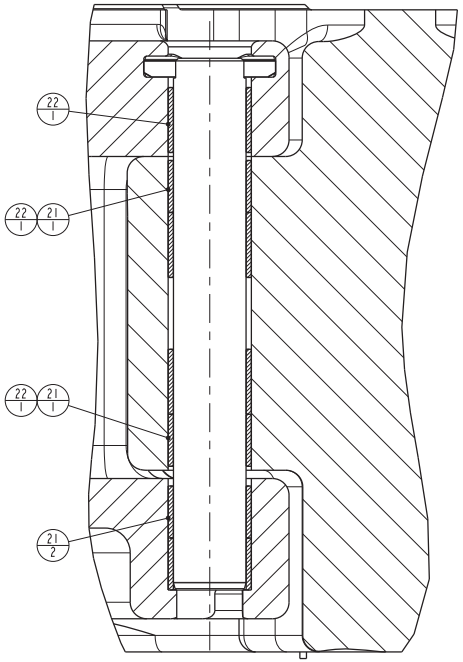

SECTION C-C
SCALE 1:1

ORACLE PARTNUMBER	10143542		
LEGACY PARTNUMBER	50006430	REFERENCE ONLY	
MATERIAL			
SURF. FINISH / PAINTSPEC.	-	COLOR	-
WEIGHT	280.9 Lbs	127.4 kg	
CREATED BY	Cees de Laat	REVISION	
CREATED ON	03-Aug-06		
REVISED BY	Rene Hommes	F	
REVISED ON	09-Apr-15 10:00:51 AM		
TC - ECR	00025554	ASM	

UNLESS OTHERWISE SPECIFIED
TOLERANCES (PER ANSI Y 14.5)
3 PLACE DECIMAL .XXX ± .010
2 PLACE DECIMAL .XX ± .03
1 PLACE DECIMAL .X ± .1
ANGLES ± .5 DEGREE
BREAK SHARP CORNERS .010 ± .005
MACHINED SURFACES 125
TORCHCUT SURFACES 1000
ALL WELD SYMBOLS ACC. TO ISO
ALL WELD DIMENSIONS ARE 2 DIM'S

DO NOT SCALE DOCUMENT
THIS DOCUMENT IS NOV TEAMCENTER CONTROLLED

NATIONAL OILWELL VARCO

SCALE 2:5
UNITS INCH (mm)
PROJ.

TITLE
ASSY SMX 3-1/2" - 5-3/4" 150TON

SIZE D
DRAWING NO. 50006430
SHEET 2 OF 2

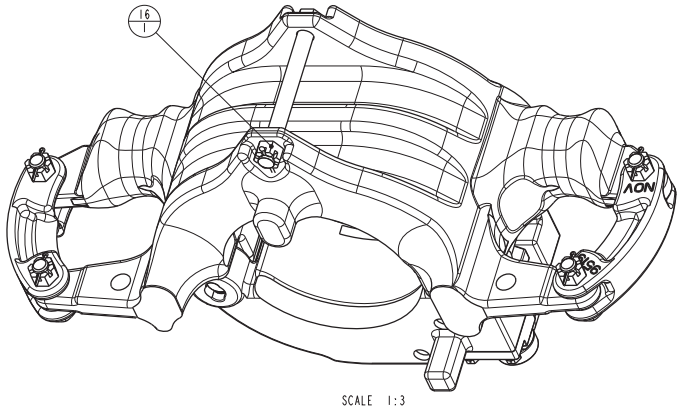

SCALE 1:3

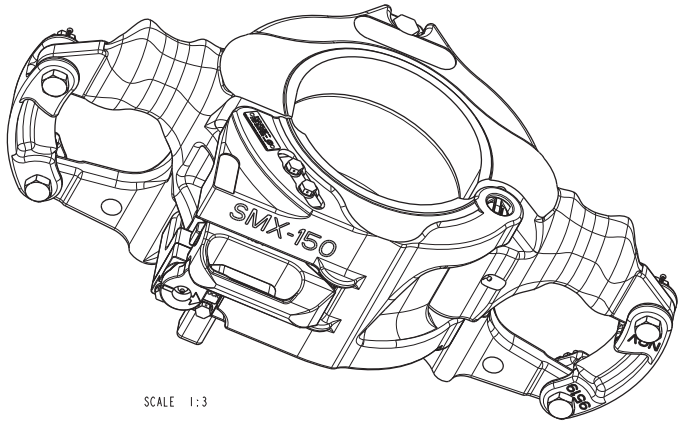

SCALE 1:3

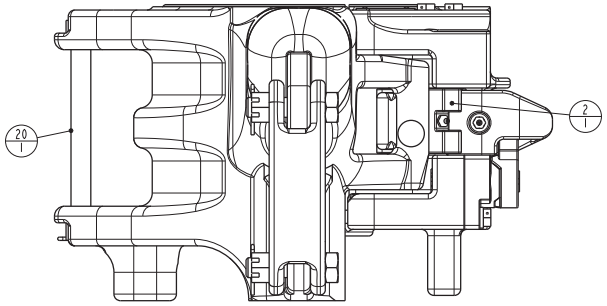

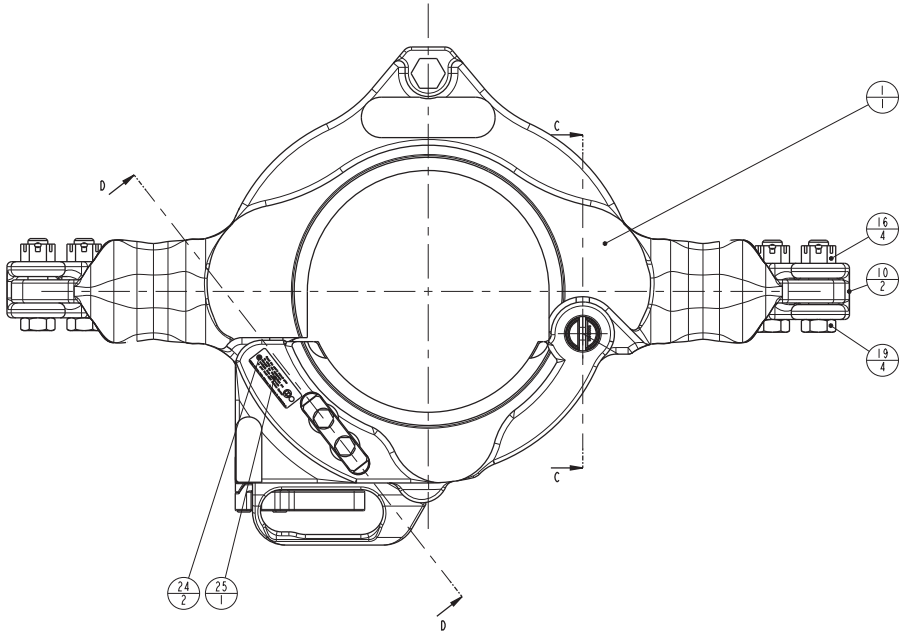

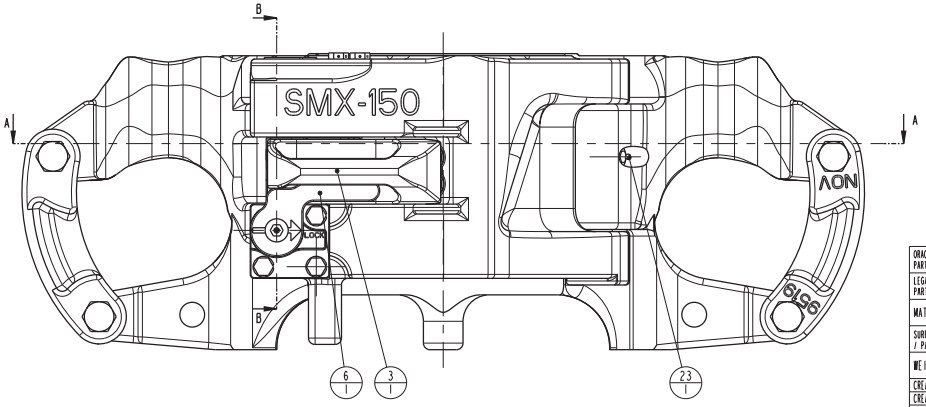

ITEM	QTY	PART NUMBER	DESCRIPTION
1	1	10727356	SMX 6 - 9" 150TON / 500TON LINKS MACHINING
2	1	10143503-001	SMX CAMLATCH MACHINING
3	1	10143507-001	SMX CAMLATCHLOCK MACHINING
4	1	10143510-001	HINGE PIN SMX 6-9" 150TON
5	2	10143511-001	SMX CAMLATCH/LOCK-PIN
6	1	10143513-001	VERIFICATION LOCK MACHINING
7	1	10143518-001	SMX HINGE PIN LOCK BAR 1/4" x 2"
8	1	10143521-001	LOCK STRIP
9	1	10143522-001	LOCK STOP BLOCK MACH.
10	2	10715139-001	LINK BLOCK
11	2	59000333	SMX COMPRESSION SPRING D-275-A RVS
12	1	59000334	SMX COMPRESSION SPRING D-268-B
13	5	51007-C	WASHER, LOCK-STEEL
14	6	51402-12	COTTER PIN 0.125X1.5
15	1	50510-C	NUT, HEX-SLOTTED 5/8-11
16	5	50512-C	NUT, HEX-SLOTTED 3/4-10
17	1	50810-N-C	WASHER, FLAT 5/8", NARROW
18	5	50007-12-C8D	SCREW,CAP-HEX HD (UNC 7/16")
19	4	939099-96	SCREW CAP-HEX-HD DRILLED SHANK 3/4-10UNC x 3"
20	1	939099-536	SCREW CAP-HEX-HD DRILLED SHANK 7/8
21	4	979770-2820	GLACIER PM2820SY 28/32-20 mm
22	3	979770-2825	GLACIER PM2825SY 28/32-25 mm
23	4	53201	FITTING, GREASE, STRAIGHT
24	2	53301-4-5	SCREW, DRIVE 0.114 DIA X 5/16
25	1	10140060-001	INFO & READ MANUAL PLATE

ITEMS 2 AND 3; "CAM LATCH" AND "CAM LATCH LOCK"
SHALL BE USED AS A SET AND BOTH ARE MARKED WITH AN IDENTICAL
UNIQUE "E" NUMBER.
REPLACE AS SET!

KIT 50006449% CONTAINS ONE CAM LATCH- AND ONE CAM LATCH LOCK
SUPPLIED WITH A GREASE NIPPLE.
AVAILABLE KITS:
-50006449 "CAM LATCH /- LOCK-I KIT SMX"
-50006449-BT "CAM LATCH /- LOCK-I-BT KIT SMX" FOR LOW TEMPERATURE
-50006449-SR4 "CAM LATCH /- LOCK-I KIT SMX-SR4" WITH
ADDITIONAL VOLUMETRIC EXAMINATION OF CASTINGS.

BOLT MOUNTING NOTES:

UNLESS WHEN SECURED BY A SPLIT PIN,
ALL BOLTS MUST BE LOCKWIRED AS PER
ABOVE SHOWN EXAMPLE.

TO PREVENT MUD INGRESS, ALL BOLTS
NEED TO BE ASSEMBLED WITH A LIBERAL
AMOUNT OF WATER RESISTANT GREASE
ON THE THREAD.

ORACLE PARTNUMBER	10034495		
LEGACY PARTNUMBER	50006438	REFERENCE ONLY	
MATERIAL			
SURF. FINISH / PAINTSPEC.	-	COLOR	RED GREEN 10,17,20
WEIGHT	331.3 Lbs	150.3 kg	
CREATED BY	Cees de Laat	REVISION	C
CREATED ON	22-Apr-08		
REVISED BY	Rene Hommes		
REVISED ON	09-Apr-15 10:16:34 AM		
TC - ECR	00025554	DAD	

UNLESS OTHERWISE SPECIFIED
TOLERANCES (PER ANSI Y 14.5)
3 PLACE DECIMAL .XXX ± .010
2 PLACE DECIMAL .XX ± .03
1 PLACE DECIMAL .X ± .1
ANGLES ± .5 DEGREE
BREAK SHARP CORNERS .010 ± .005
MACHINED SURFACES 125
TORCHCUT SURFACES 1000
ALL WELD SYMBOLS ACC. TO ISO
ALL WELD DIMENSIONS ARE Z DIM'S

DO NOT SCALE DOCUMENT
THIS DOCUMENT IS NOV TEAMCENTER CONTROLLED

NATIONAL OILWELL VARCO

SCALE 2:5 | PROJ. | UNITS INCH (mm)

TITLE: ASSY SMX 6 - 9" 150TON / 500TON LINKS
SIZE: D
DRAWING NO. 50006438
SHEET 1 OF 2

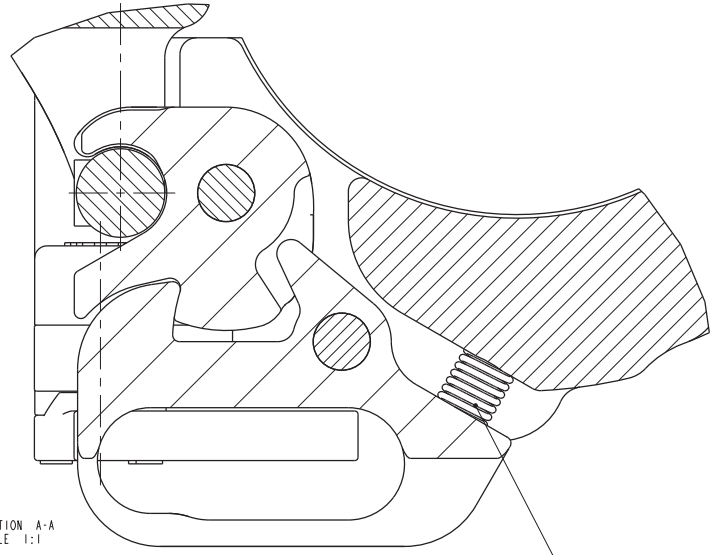

SECTION A-A
SCALE 1:1

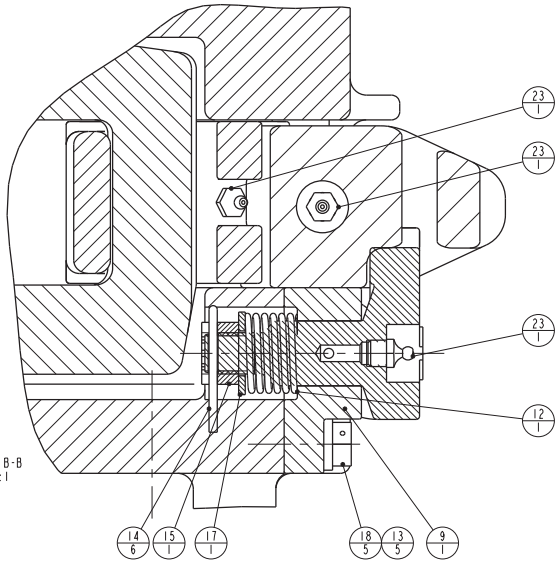

SECTION B-B
SCALE 1:1

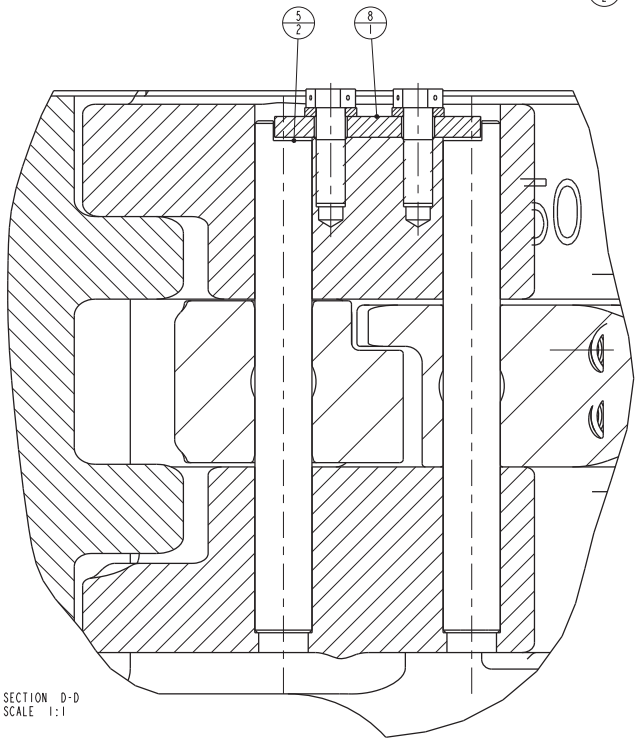

SECTION D-D
SCALE 1:1

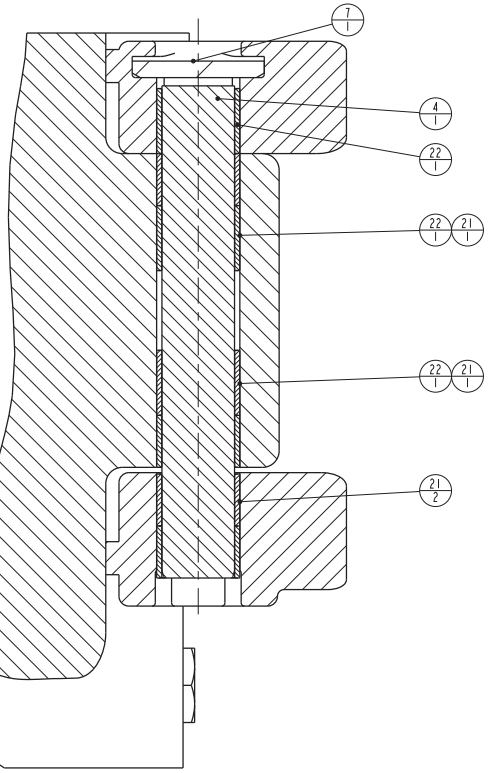

SECTION C-C
SCALE 1:1

ORACLE PARTNUMBER	10034495		
LEGACY PARTNUMBER	50006438	REFERENCE ONLY	
MATERIAL			
SURF. FINISH / PAINTSPEC.	-	COLOR	-
WEIGHT	331.3 Lbs	150.3 kg	
CREATED BY	Cees de Laat	REVISION	
CREATED ON	22-Apr-08		
REVISED BY	Rene Hommes		
REVISED ON	09-Apr-15 10:16:34 AM		
TC - ECR	00025554	DAD	

UNLESS OTHERWISE SPECIFIED
TOLERANCES (PER ANSI Y 14.5)
3 PLACE DECIMAL .XXX ± .010
2 PLACE DECIMAL .XX ± .03
1 PLACE DECIMAL .X ± .1
ANGLES ± .5 DEGREE
BREAK SHARP CORNERS .010 ± .005
MACHINED SURFACES 125
TORCHCUT SURFACES 1000
ALL WELD SYMBOLS ACC. TO ISO
ALL WELD DIMENSIONS ARE Z DIM'S

DO NOT SCALE DOCUMENT

THIS DOCUMENT IS NOV TEAMCENTER CONTROLLED

NATIONAL OILWELL VARCO

SCALE 1:2

PROJ.

UNITS INCH (mm)

TITLE
ASSY SMX 6 - 9" 150TON / 500TON LINKS

SIZE D

DRAWING NO. 50006438

SHEET 2 OF 2

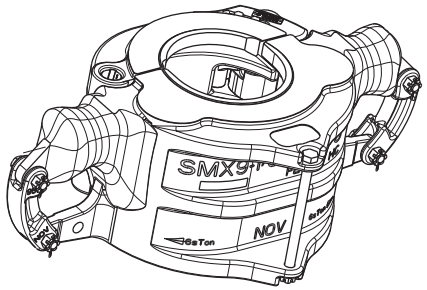

SCALE 1:5

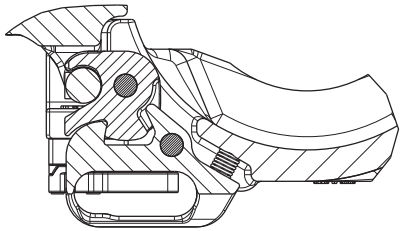

SECTION STOP-PIN-STOP-PIN

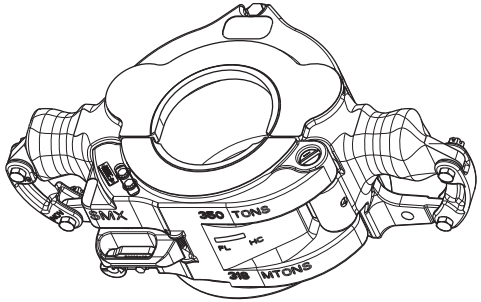

SCALE 1:5

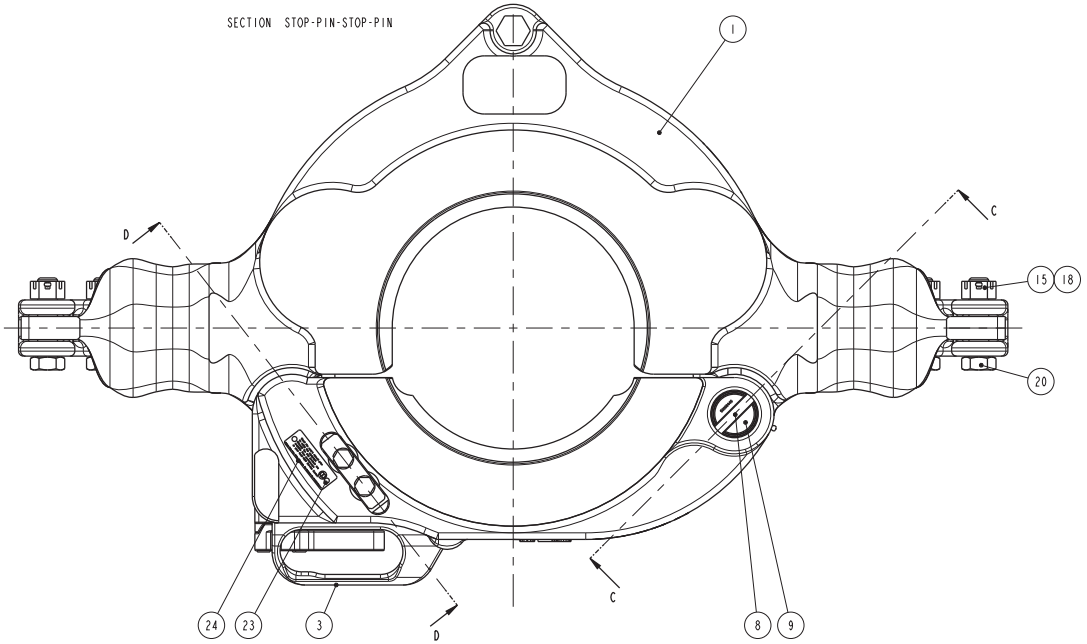

ITEM	QTY	PART NUMBER	DESCRIPTION
1	1	10721810	ASSY SMX 9-1/8" -13-3/8" MACHINING
2	1	10143503-001	SMX CAMLATCH MACHINING
3	1	10143507-001	SMX CAMLATCHLOCK MACHINING
4	2	10143511-001	SMX CAMLATCH/LOCK-PIN
5	1	10143513-001	VERIFICATION LOCK MACHINING
6	1	10143521-001	LOCK STRIP
7	1	10143522-001	LOCK STOP BLOCK MACH.
8	1	10143603-001	LOCK BAR SMX
9	1	10143605-001	HINGE PIN
10	2	10715139-001	LINK BLOCK
11	2	59000333	SMX COMPRESSION SPRING D-275-A RVS
12	1	59000334	SMX COMPRESSION SPRING D-268-B
13	5	50007-12-C8D	SCREW,CAP-HEX HD (UNC 7/16")
14	1	50510-C	NUT, HEX-SLOTTED 5/8-11
15	5	50512-C	NUT, HEX-SLOTTED 3/4-10
16	1	50810-N-C	WASHER, FLAT 5/8", NARROW
17	5	51007-C	WASHER, LOCK-STEEL
18	6	51402-12	COTTER PIN 0.125X1.5
19	1	939099-586	SCREW CAP-HEX-HD DRILLED SHANK 3/4" x 11"
20	4	939099-96	SCREW CAP-HEX-HD DRILLED SHANK 3/4-10UNC x 3"
21	4	979770-56	40x44x50 SY Bushing
22	4	53201	FITTING, GREASE, STRAIGHT
23	2	53301-4-5	SCREW, DRIVE 0.114 DIA X 5/16
24	1	10140060-001	INFO & READ MANUAL PLATE

ITEMS 2 AND 3; "CAM LATCH" AND "CAM LATCH LOCK"
SHALL BE USED AS A SET AND BOTH ARE MARKED WITH AN IDENTICAL
UNIQUE "E" NUMBER.
REPLACE AS SET!

KIT 50006449% CONTAINS ONE CAM LATCH- AND ONE CAM LATCH LOCK
SUPPLIED WITH A GREASE NIPPLE.
AVAILABLE KITS:
-50006449 "CAM LATCH /- LOCK-I KIT SMX"
-50006449-BT "CAM LATCH /- LOCK-I-BT KIT SMX" FOR LOW TEMPERATURE
-50006449-SR4 "CAM LATCH /- LOCK-I KIT SMX-SR4" WITH
ADDITIONAL VOLUMETRIC EXAMINATION OF CASTINGS.

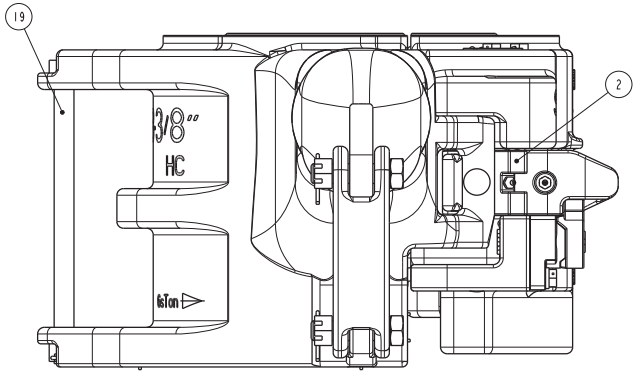

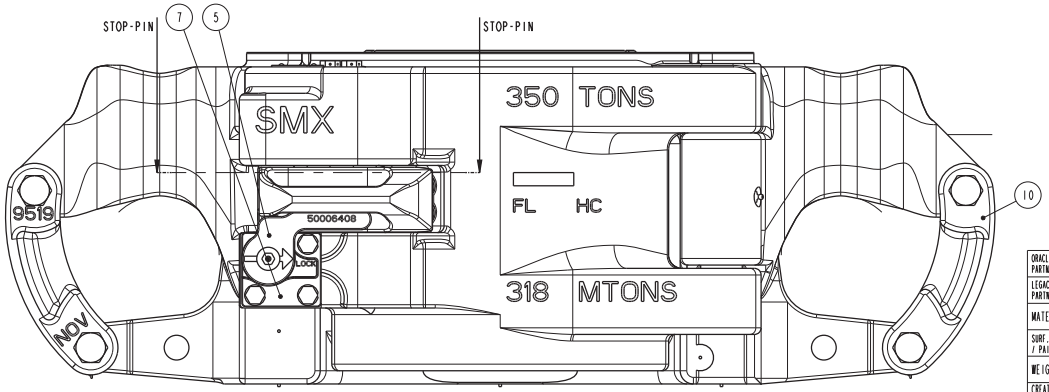

BOLT MOUNTING NOTES:

UNLESS WHEN SECURED BY A SPLIT PIN,
ALL BOLTS MUST BE LOCKWIRED AS PER
SHOWN EXAMPLE.

TO PREVENT MUD INGRESS, ALL BOLTS
NEED TO BE ASSEMBLED WITH A LIBERAL
AMOUNT OF WATER RESISTANT GREASE
ON THE THREAD.

ORACLE PARTNUMBER	10143587		
LEGACY PARTNUMBER	50006440	REFERENCE ONLY	
MATERIAL			
SURF. FINISH / PAINTSPEC.	-	COLOR	RED GREEN 2, 3, 19
WEIGHT	615.1 Lbs	279.0 kg	
CREATED BY	Cees de Laat	REVISION	
CREATED ON	01-Jun-06		
REVISED BY	Rene Hommes		
REVISED ON	10-Apr-15 08:37:45 AM	F	
TC - ECR	00025554	ASM	

UNLESS OTHERWISE SPECIFIED
TOLERANCES (PER ANSI Y 14.5)
3 PLACE DECIMAL .XXX ± .010
2 PLACE DECIMAL .XX ± .03
1 PLACE DECIMAL .X ± .1
ANGLES ± .5 DEGREE
BREAK SHARP CORNERS .010 ± .005
MACHINED SURFACES 125
TORCHCUT SURFACES 1000
ALL WELD SYMBOLS ACC. TO ISO
ALL WELD DIMENSIONS ARE 2 DIM'S

DO NOT SCALE DOCUMENT
THIS DOCUMENT IS NOV TEAMCENTER CONTROLLED

NOV
NATIONAL OILWELL VARCO

SCALE 2:5
UNITS INCH (mm)
PROJ.

TITLE	SIZE	DRAWING NO.	SHEET
ASSY SMX 9-1/8" - 13-3/8" 350TON	D	50006440	1 OF 2

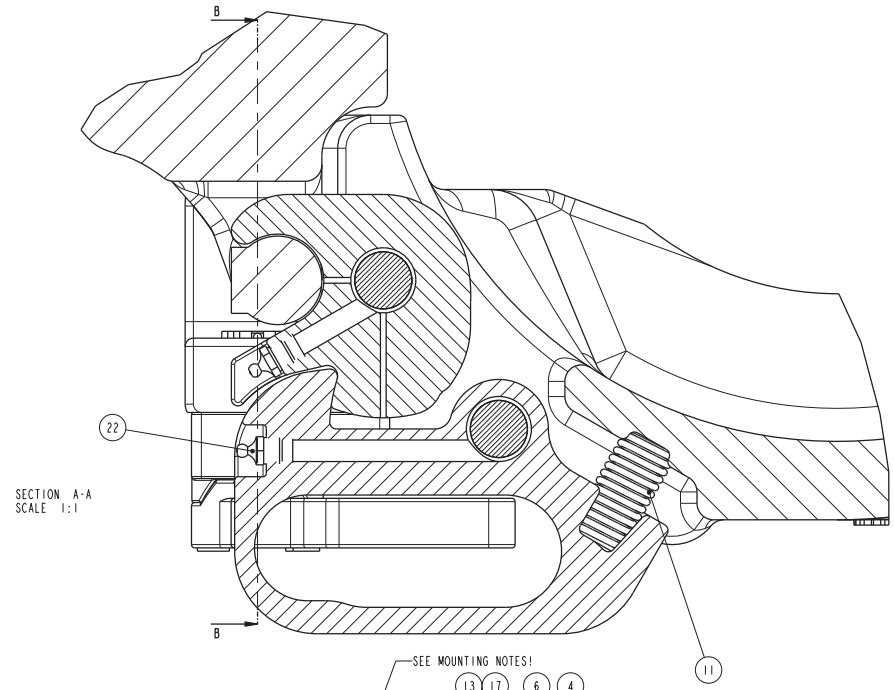

SECTION A-A
SCALE 1:1

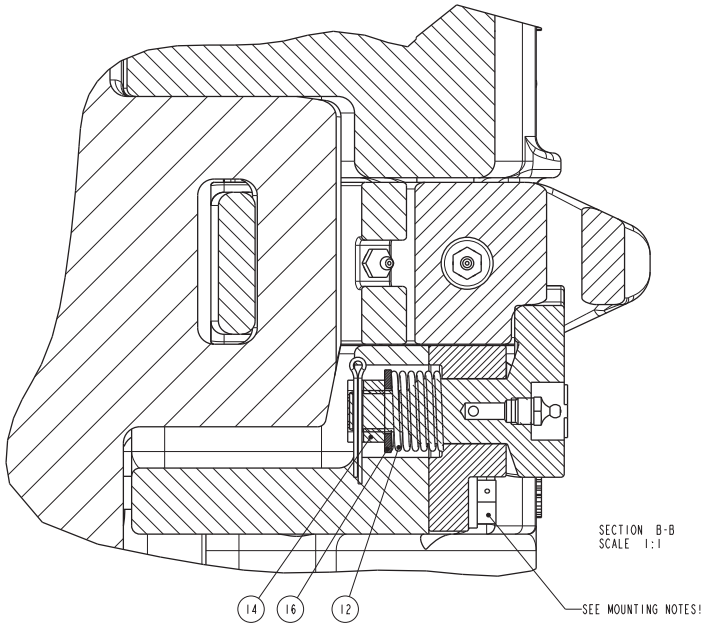

SECTION B-B
SCALE 1:1

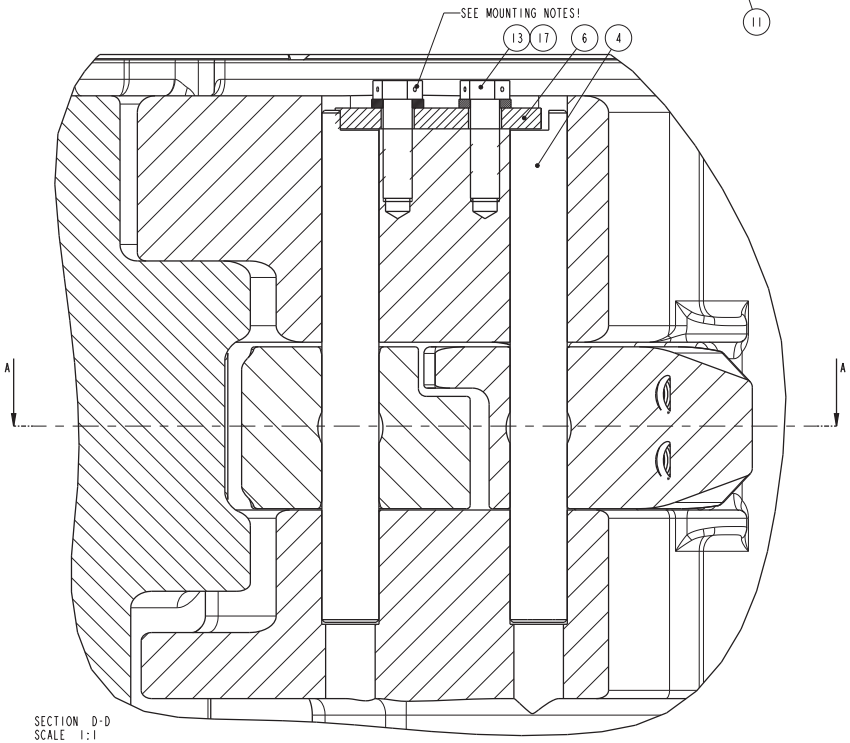

SECTION D-D
SCALE 1:1

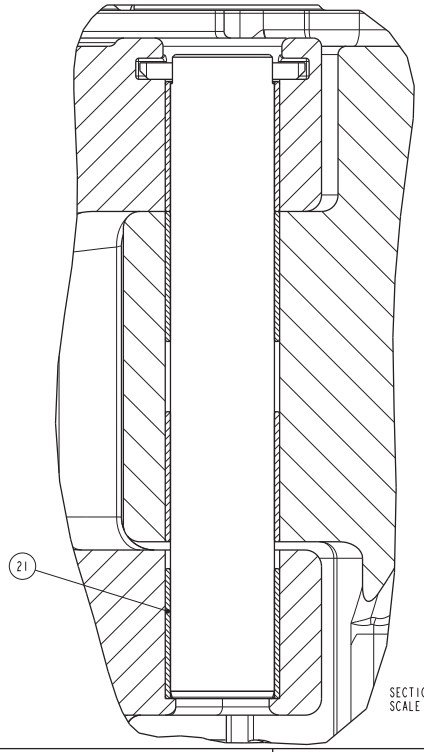

SECTION C-C
SCALE 1:1

ORACLE PARTNUMBER	10143587		
LEGACY PARTNUMBER	50006440	REFERENCE ONLY	
MATERIAL			
SURF. FINISH / PAINTSPEC.	-	COLOR	-
WEIGHT	615.1 Lbs	279.0 kg	
CREATED BY	Cees de Laat	REVISION	
CREATED ON	01-Jun-06		
REVISED BY	Rene Hommes		
REVISED ON	10-Apr-15 08:37:45 AM		
TC - ECR	00025554	ASM	

UNLESS OTHERWISE SPECIFIED
TOLERANCES (PER ANSI Y 14.5)
3 PLACE DECIMAL .XXX ± .010
2 PLACE DECIMAL .XX ± .03
1 PLACE DECIMAL .X ± .1
ANGLES ± .5 DEGREE
BREAK SHARP CORNERS .010 ± .005
MACHINED SURFACES 125
TORCHCUT SURFACES 1000
ALL WELD SYMBOLS ACC. TO ISO
ALL WELD DIMENSIONS ARE Z DIM'S

DO NOT SCALE DOCUMENT
THIS DOCUMENT IS NOV TEAMCENTER CONTROLLED

NATIONAL OILWELL VARCO

SCALE 2:5
UNITS INCH (mm)
PROJ.

TITLE
ASSY SMX 9-1/8" - 13-3/8" 350TON

SIZE D
DRAWING NO. 50006440
SHEET 2 OF 2

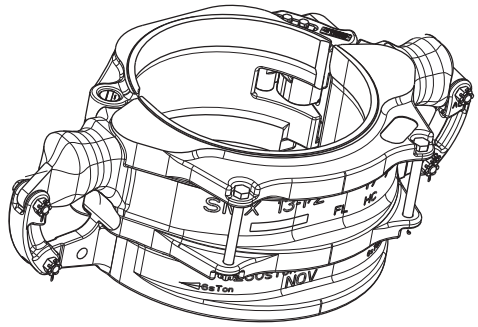

SCALE 1:5

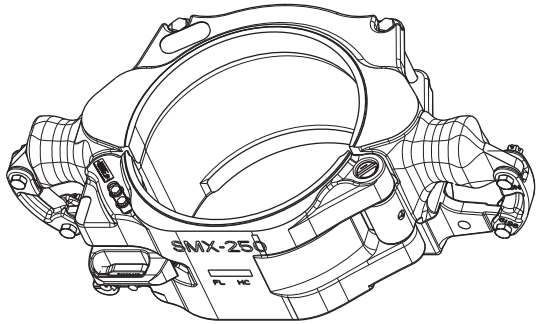

SCALE 1:5

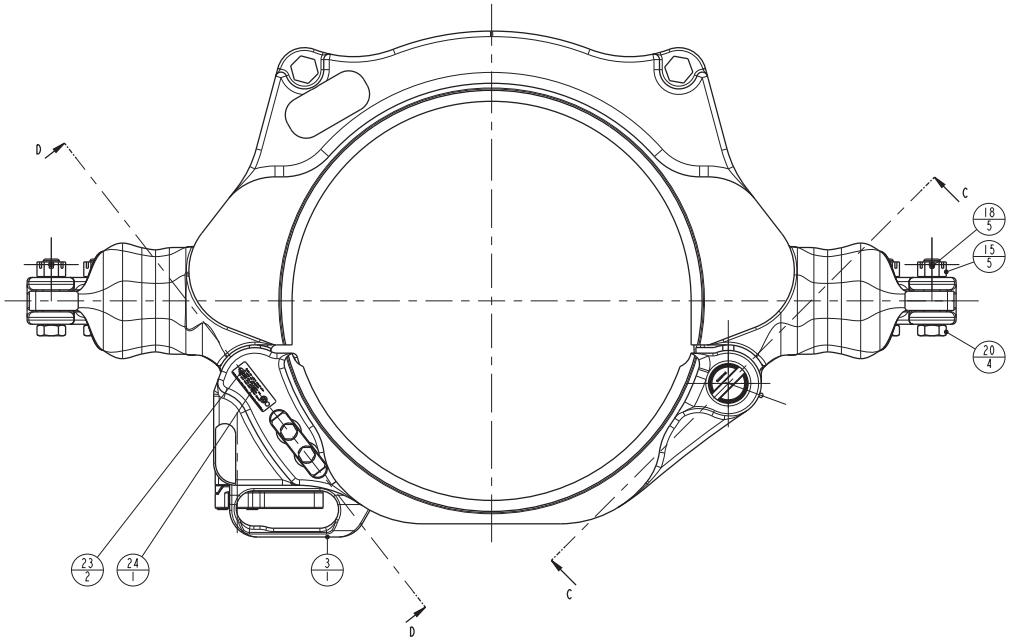

ITEM	QTY	PART NUMBER	DESCRIPTION
1	1	10721698	ASSY SMX 13-1/2" - 17-7/8" MACHINING
2	1	10143503-001	SMX CAMLATCH MACHINING
3	1	10143507-001	SMX CAMLATCHLOCK MACHINING
4	2	10143511-001	SMX CAMLATCH/LOCK-PIN
5	1	10143513-001	VERIFICATION LOCK MACHINING
6	1	10143521-001	LOCK STRIP
7	1	10143522-001	LOCK STOP BLOCK MACH.
8	1	10143603-001	LOCK BAR SMX
9	1	10143605-001	HINGE PIN
10	2	10715139-001	LINK BLOCK
11	2	59000333	SMX COMPRESSION SPRING D-275-A RVS
12	1	59000334	SMX COMPRESSION SPRING D-268-B
13	5	50007-12-C8D	SCREW,CAP-HEX HD (UNC 7/16")
14	1	50510-C	NUT, HEX-SLOTTED 5/8-11
15	6	50512-C	NUT, HEX-SLOTTED 3/4-10
16	1	50810-N-C	WASHER, FLAT 5/8", NARROW
17	5	51007-C	WASHER, LOCK-STEEL
18	7	51402-12	COTTER PIN 0.125X1.5
19	2	939099-526	SCREW CAP-HEX-HD DRILLED SHANK 3/4"-10UNC X 7-1/2"
20	4	939099-96	SCREW CAP-HEX-HD DRILLED SHANK 3/4-10UNC x 3"
21	4	979770-56	40x44x50 SY Bushing
22	4	53201	FITTING, GREASE, STRAIGHT
23	2	53301-4-5	SCREW, DRIVE 0.114 DIA X 5/16
24	1	10140060-001	INFO & READ MANUAL PLATE

ITEMS 2 AND 3; "CAM LATCH" AND "CAM LATCH LOCK"
SHALL BE USED AS A SET AND BOTH ARE MARKED WITH AN IDENTICAL
UNIQUE "E" NUMBER.
REPLACE AS SET!

KIT 50006449% CONTAINS ONE CAM LATCH- AND ONE CAM LATCH LOCK
SUPPLIED WITH A GREASE NIPPLE.
AVAILABLE KITS:
-50006449 "CAM LATCH /- LOCK-1 KIT SMX"
-50006449-BT "CAM LATCH /- LOCK-1-BT KIT SMX" FOR LOW TEMPERATURE
-50006449-SR4 "CAM LATCH /- LOCK-1 KIT SMX-SR4" WITH
ADDITIONAL VOLUMETRIC EXAMINATION OF CASTINGS.

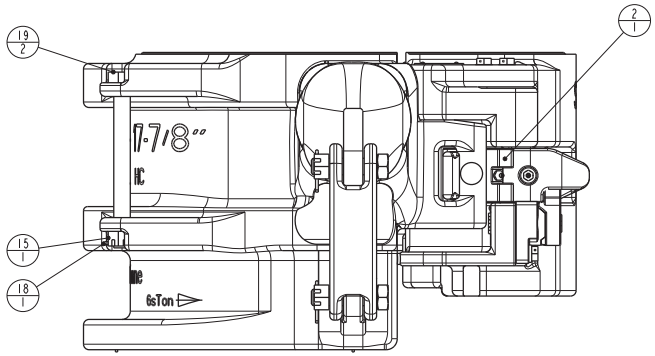

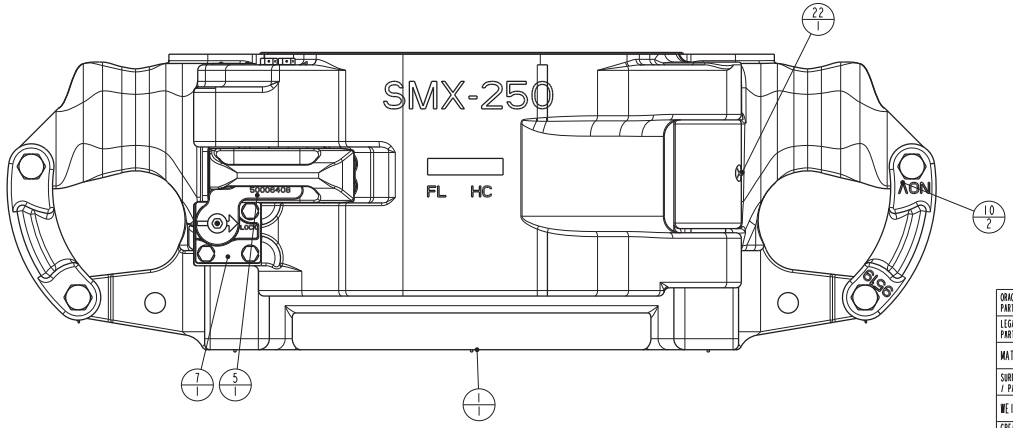

BOLT MOUNTING NOTES:

UNLESS WHEN SECURED BY A SPLIT PIN,
ALL BOLTS MUST BE LOCKWIRED AS PER
ABOVE SHOWN EXAMPLE.

TO PREVENT MUD INGRESS, ALL BOLTS
NEED TO BE ASSEMBLED WITH A LIBERAL
AMOUNT OF WATER RESISTANT GREASE
ON THE THREAD.

ORACLE PARTNUMBER	10143612		
LEGACY PARTNUMBER	50006450	REFERENCE ONLY	
MATERIAL			
SURF. FINISH / PAINTSPEC.	-	COLOR	RED GREEN 10,16,10
WEIGHT	688.1 Lbs	312.1 kg	
CREATED BY	Cees de Laat	REVISION	
CREATED ON	13-Feb-07		
REVISED BY	Rene Hommes		
REVISED ON	09-Apr-15 03:06:16 PM		
TC - ECR	00025554	ASM	

UNLESS OTHERWISE SPECIFIED
TOLERANCES (PER ANSI Y 14.5)
3 PLACE DECIMAL .XXX ± .010
2 PLACE DECIMAL .XX ± .03
1 PLACE DECIMAL .X ± .1
ANGLES ± .5 DEGREE
BREAK SHARP CORNERS .010 ± .005
MACHINED SURFACES 125
TORCHCUT SURFACES 1000
ALL WELD SYMBOLS ACC. TO ISO
ALL WELD DIMENSIONS ARE 2 DIM'S

DO NOT SCALE DOCUMENT
THIS DOCUMENT IS NOV TEAMCENTER CONTROLLED

NOV
NATIONAL OILWELL VARCO

DO NOT SCALE DOCUMENT — SCALE 1:3 — PROJ.
THIS DOCUMENT IS NOV TEAMCENTER CONTROLLED — UNITS INCH (mm)

TITLE	SIZE	DRAWING NO.	SHEET
ASSY SMX 13-1/2" - 17-7/8" 250TON	D	50006450	1 OF 2

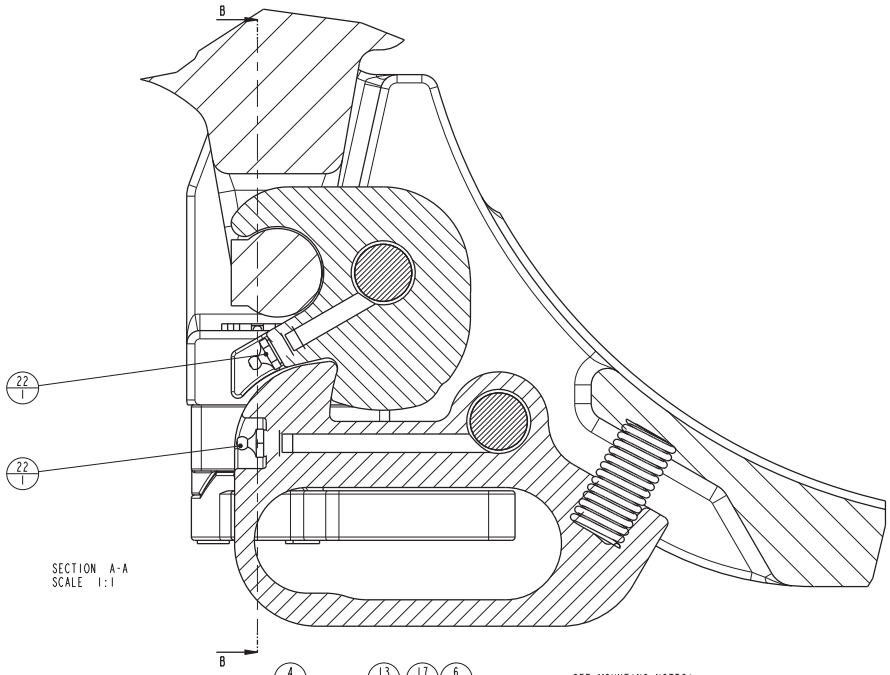

SECTION A-A
SCALE 1:1

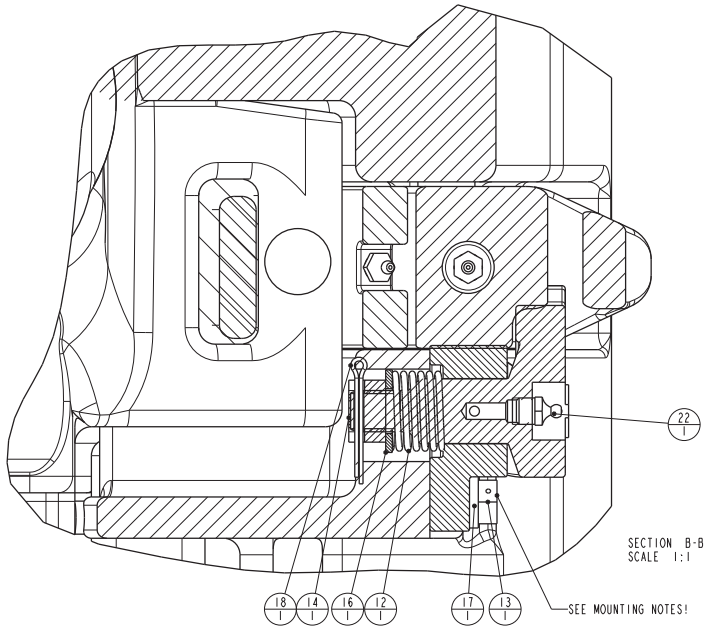

SECTION B-B
SCALE 1:1

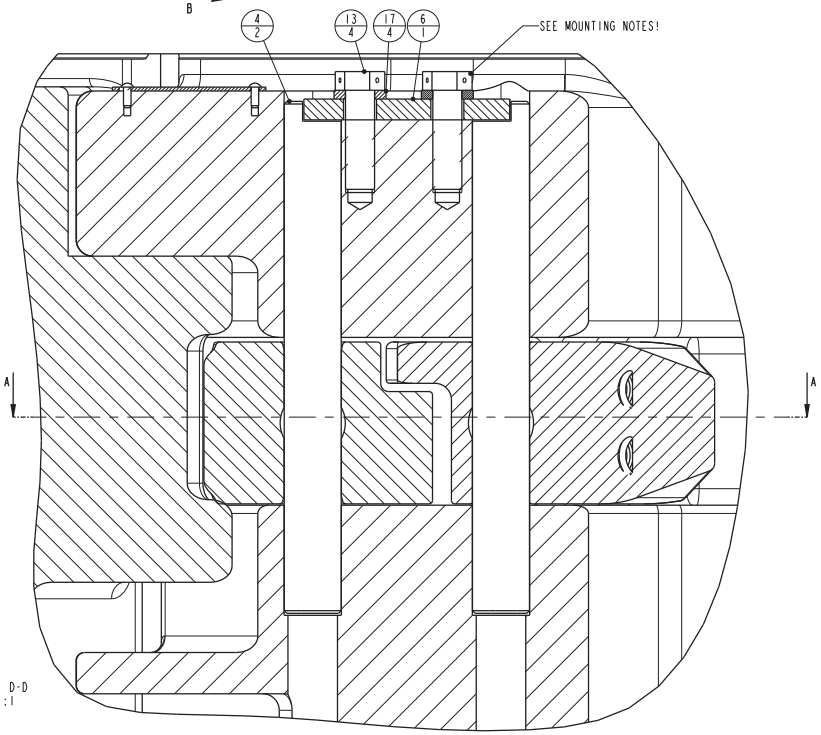

SECTION D-D
SCALE 1:1

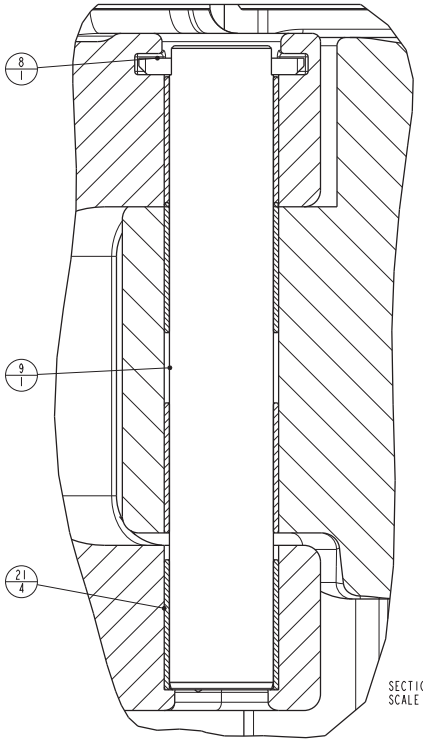

SECTION C-C
SCALE 1:1

ORACLE PARTNUMBER	10143612		
LEGACY PARTNUMBER	50006450	REFERENCE ONLY	
MATERIAL			
SURF. FINISH / PAINTSPEC.	-	COLOR	-
WEIGHT	688.1 Lbs	312.1 kg	
CREATED BY	Cees de Laat	REVISION	
CREATED ON	13-Feb-07		
REVISED BY	Rene Hommes		
REVISED ON	09-Apr-15 03:06:16 PM	E	
TC - ECR	00025554	ASM	

UNLESS OTHERWISE SPECIFIED
TOLERANCES (PER ANSI Y 14.5)
3 PLACE DECIMAL .XXX ± .010
2 PLACE DECIMAL .XX ± .03
1 PLACE DECIMAL .X ± .1
ANGLES ± .5 DEGREE
BREAK SHARP CORNERS .010 ± .005
MACHINED SURFACES 125
TORCHCUT SURFACES 1000
ALL WELD SYMBOLS ACC. TO ISO
ALL WELD DIMENSIONS ARE 2 DIM'S

DO NOT SCALE DOCUMENT

THIS DOCUMENT IS NOV TEAMCENTER CONTROLLED

NATIONAL OILWELL VARCO

SCALE 2:5

PROJ.

UNITS INCH (mm)

TITLE
ASSY SMX 13-1/2" - 17-7/8" 250TON

SIZE D

DRAWING NO. 50006450

SHEET 2 OF 2

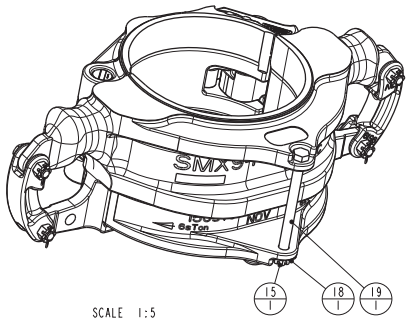

SCALE 1:5

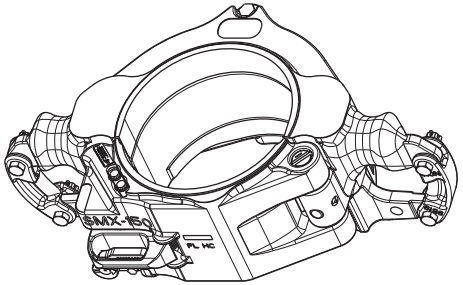

SCALE 1:5

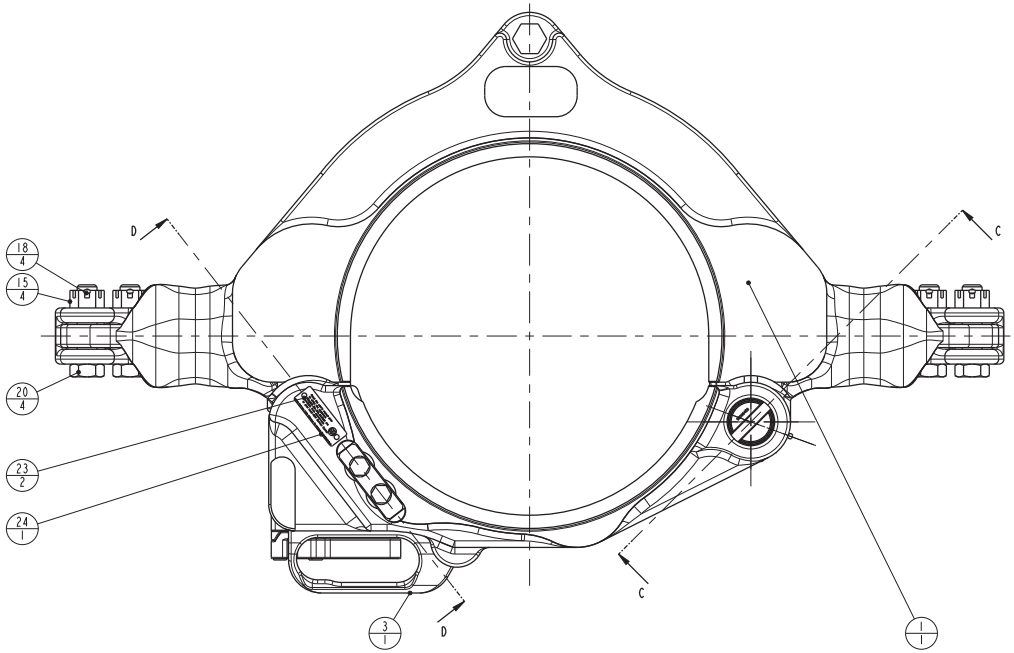

ITEM	QTY	PART NUMBER	DESCRIPTION
1	1	10722413	SMX 9-1/8" - 13-3/8" 150TON/500TON LINKS MACHINING
2	1	10143503-001	SMX CAMLATCH MACHINING
3	1	10143507-001	SMX CAMLATCHLOCK MACHINING
4	1	10143513-001	VERIFICATION LOCK MACHINING
5	1	10143521-001	LOCK STRIP
6	1	10143522-001	LOCK STOP BLOCK MACH.
7	2	10143567-001	CAMLATCH LOCKPIN SMX
8	1	10143603-001	LOCK BAR SMX
9	1	10143648-001	HINGE PIN SMX 9-1/8 - 13-3/8
10	2	10715139-001	LINK BLOCK
11	2	59000333	SMX COMPRESSION SPRING D-275-A RVS
12	1	59000334	SMX COMPRESSION SPRING D-268-B
13	5	50007-12-C8D	SCREW,CAP-HEX HD (UNC 7/16")
14	1	50510-C	NUT, HEX-SLOTTED 5/8-11
15	5	50512-C	NUT, HEX-SLOTTED 3/4-10
16	1	50810-N-C	WASHER, FLAT 5/8", NARROW
17	5	51007-C	WASHER, LOCK-STEEL
18	6	51402-12	COTTER PIN 0.125X1.5
19	1	939099-566	SCREW,CAP-HEX HD (UNC 3/4") X 9-1/2" DRILLED SHANK
20	4	939099-96	SCREW CAP-HEX-HD DRILLED SHANK 3/4-10UNC x 3"
21	4	979770-56	40x44x50 SY Bushing
22	4	53201	FITTING, GREASE, STRAIGHT
23	2	53301-4-5	SCREW, DRIVE 0.114 DIA X 5/16
24	1	10140060-001	INFO & READ MANUAL PLATE

ITEMS 2 AND 3; "CAM LATCH" AND "CAM LATCH LOCK"
SHALL BE USED AS A SET AND BOTH ARE MARKED WITH AN IDENTICAL
UNIQUE "E" NUMBER.
REPLACE AS SET!

KIT 50006449% CONTAINS ONE CAM LATCH- AND ONE CAM LATCH LOCK
SUPPLIED WITH A GREASE NIPPLE.
AVAILABLE KITS:
-50006449 "CAM LATCH /- LOCK-I KIT SMX"
-50006449-BT "CAM LATCH /- LOCK-I-BT KIT SMX" FOR LOW TEMPERATURE
-50006449-SR4 "CAM LATCH /- LOCK-I KIT SMX-SR4" WITH
ADDITIONAL VOLUMETRIC EXAMINATION OF CASTINGS.

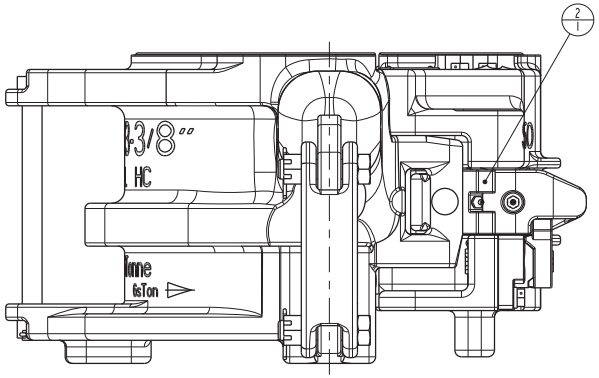

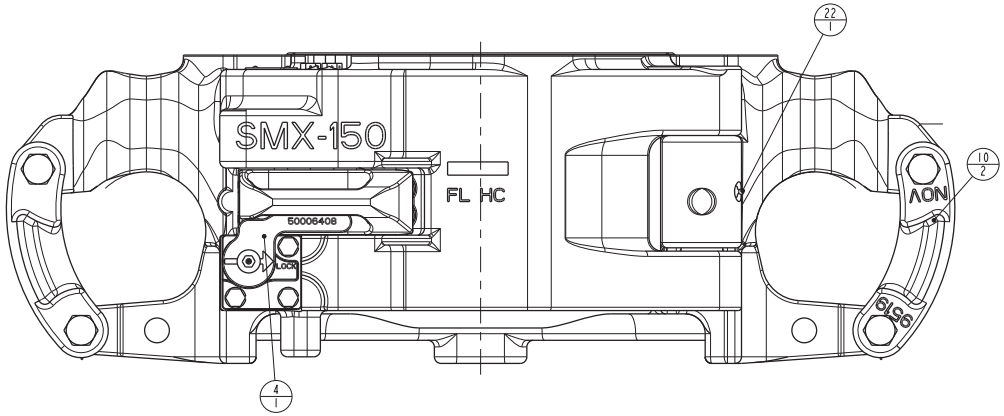

BOLT MOUNTING NOTES:

UNLESS WHEN SECURED BY A SPLIT PIN,
ALL BOLTS MUST BE LOCKWIRED AS PER
ABOVE SHOWN EXAMPLE.

TO PREVENT MUD INGRESS, ALL BOLTS
NEED TO BE ASSEMBLED WITH A LIBERAL
AMOUNT OF WATER RESISTANT GREASE
ON THE THREAD.

ORACLE PARTNUMBER	10143624		
LEGACY PARTNUMBER	50006454	REFERENCE ONLY	
MATERIAL			
SURF. FINISH / PAINTSPEC.	-	COLOR	RED GREEN 10,15,16
WEIGHT	432.3 Lbs	196.1 kg	
CREATED BY	Cees de Laat	REVISION	C
CREATED ON	21-Apr-08		
REVISED BY	Rene Hommes		
REVISED ON	09-Apr-15 11:15:19 AM		
TC - ECR	00025554	ASM	

UNLESS OTHERWISE SPECIFIED
TOLERANCES (PER ANSI Y 14.5)
3 PLACE DECIMAL .XXX ± .010
2 PLACE DECIMAL .XX ± .03
1 PLACE DECIMAL .X ± .1
ANGLES ± .5° DEGREE
BREAK SHARP CORNERS .010 ± .005
MACHINED SURFACES 125
TORCHCUT SURFACES 1000
ALL WELD SYMBOLS ACC. TO ISO
ALL WELD DIMENSIONS ARE Z DIM'S

DO NOT SCALE DOCUMENT
THIS DOCUMENT IS NOV TEAMCENTER CONTROLLED

NOV
NATIONAL OILWELL VARCO

SCALE 2:5
UNITS INCH (mm)
PROJ.

TITLE
ASSY SMX 9-1/18" - 13-3/8" 150TON/500TON LINKS

SIZE D
DRAWING NO. 50006454
SHEET 1 OF 2

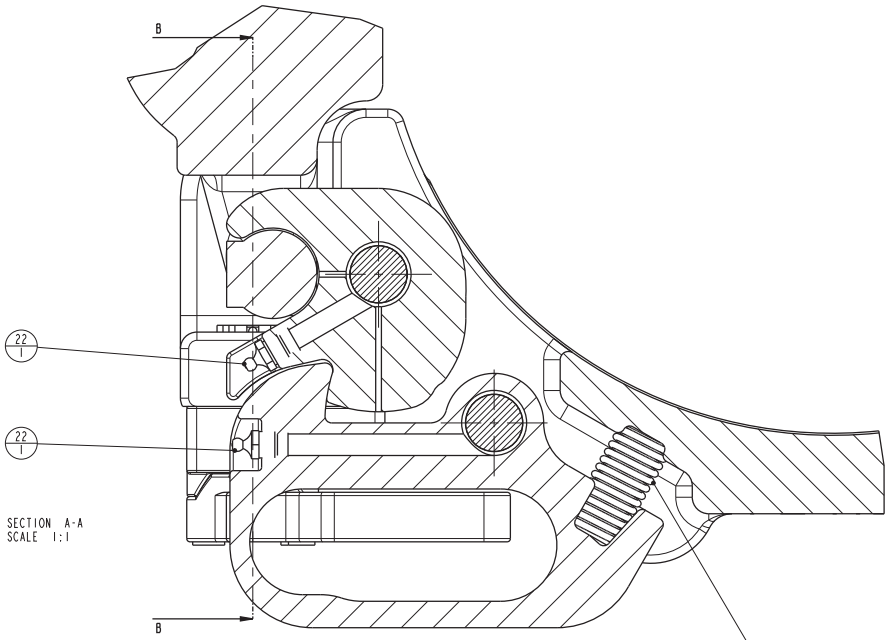

SECTION A-A
SCALE 1:1

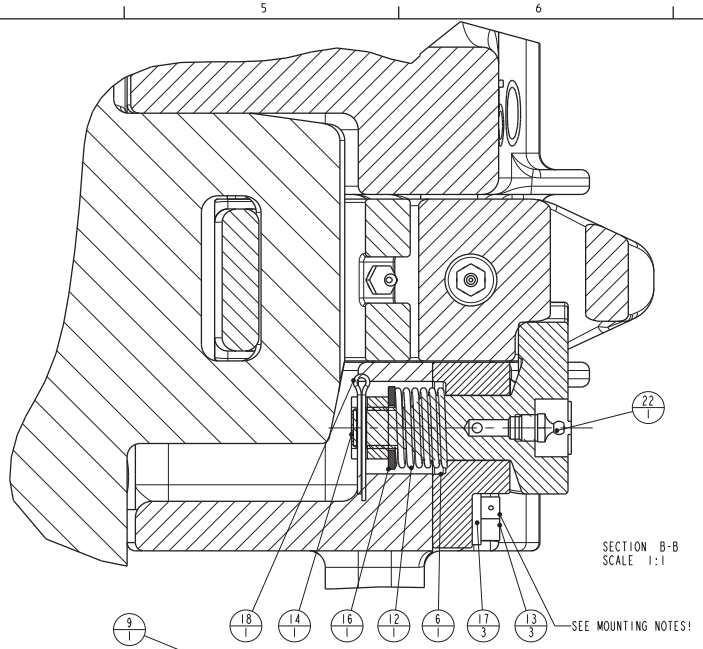

SECTION B-B
SCALE 1:1

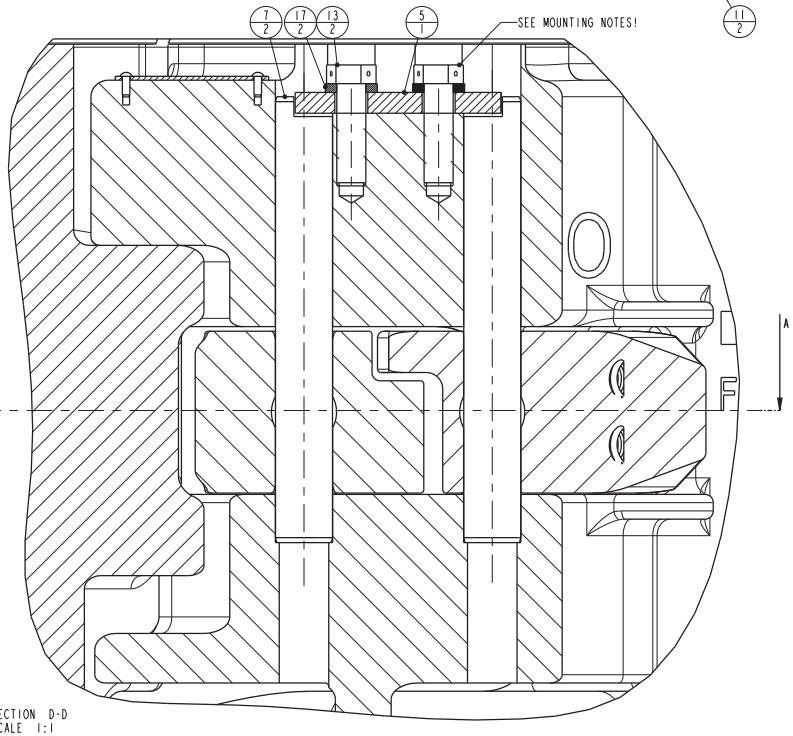

SECTION D-D
SCALE 1:1

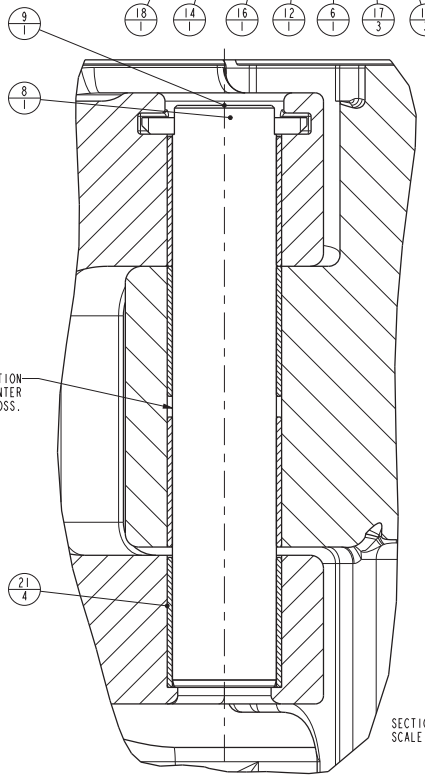

SECTION C-C
SCALE 1:1

ORACLE PARTNUMBER	10143624		
LEGACY PARTNUMBER	50006454	REFERENCE ONLY	
MATERIAL			
SURF. FINISH / PAINTSPEC.	-	COLOR	-
WEIGHT	432.3 Lbs	196.1 kg	
CREATED BY	Cees de Laat	REVISION	
CREATED ON	21-Apr-08		
REVISED BY	Rene Hommes		
REVISED ON	09-Apr-15 11:15:19 AM		
TC - ECR	00025554	ASM	C

UNLESS OTHERWISE SPECIFIED
TOLERANCES (PER ANSI Y 14.5)
3 PLACE DECIMAL .XXX ± .010
2 PLACE DECIMAL .XX ± .03
1 PLACE DECIMAL .X ± .1
ANGLES ± .5° DEGREE
BREAK SHARP CORNERS .010 ± .005
MACHINED SURFACES 125
TORCHCUT SURFACES 1000
ALL WELD SYMBOLS ACC. TO ISO
ALL WELD DIMENSIONS ARE 2 DIM'S

DO NOT SCALE DOCUMENT
THIS DOCUMENT IS NOV TEAMCENTER CONTROLLED

NATIONAL OILWELL VARCO

SCALE 2:5
PROJ.
UNITS INCH (mm)

TITLE
ASSY SMX 9-1/18" - 13-3/8" 150TON/500TON LINKS

SIZE D
DRAWING NO. 50006454
SHEET 2 OF 2

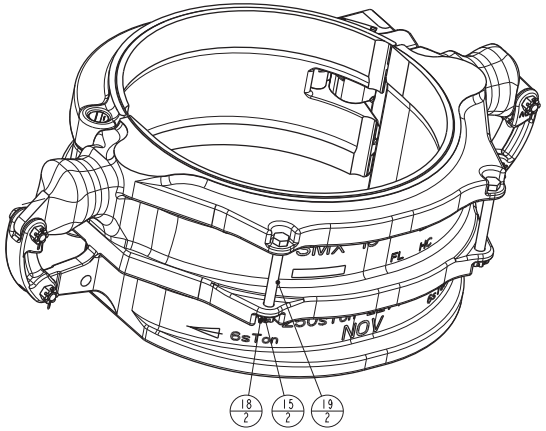

SCALE 1:5

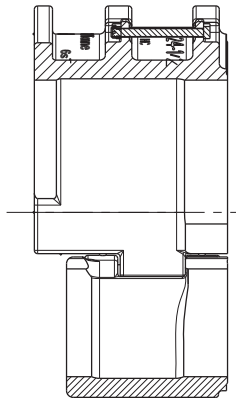

SECTION Y-Y

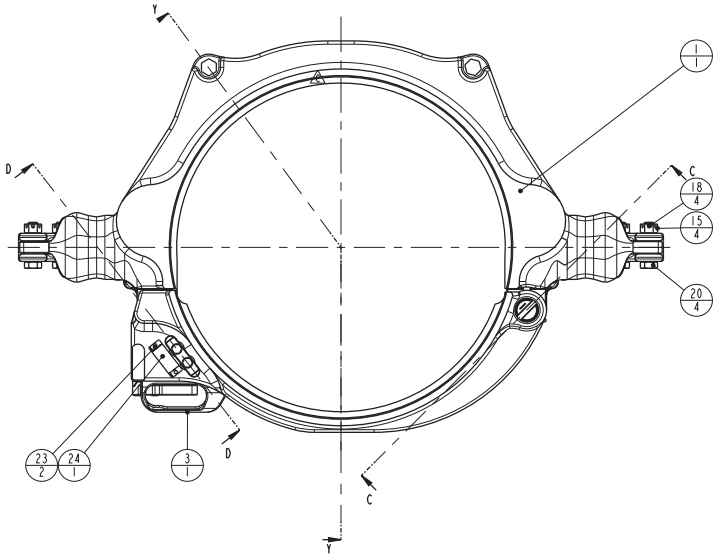

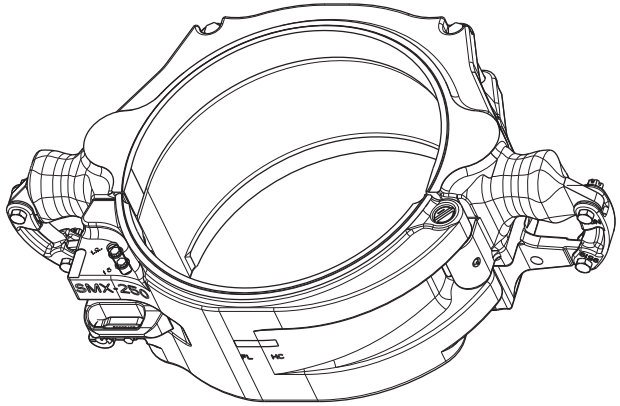

SCALE 1:5

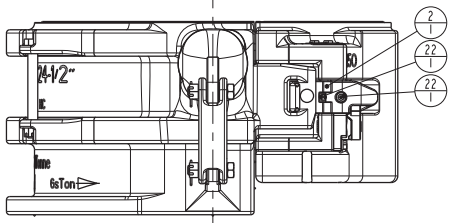

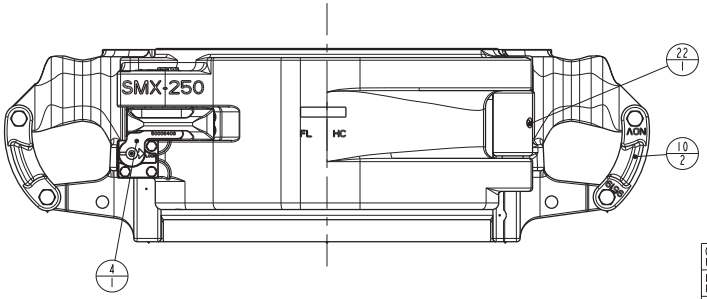

ITEM	QTY	PART NUMBER	DESCRIPTION
1	1	10721697	ASSY SMX 18 " - 24-1/2" MACHINING
2	1	10143503-001	SMX CAMLATCH MACHINING
3	1	10143507-001	SMX CAMLATCHLOCK MACHINING
4	1	10143513-001	VERIFICATION LOCK MACHINING
5	1	10143521-001	LOCK STRIP
6	1	10143522-001	LOCK STOP BLOCK MACH.
7	2	10143567-001	CAMLATCH LOCKPIN SMX
8	1	10143603-001	LOCK BAR SMX
9	1	10143605-001	HINGE PIN
10	2	10715139-001	LINK BLOCK
11	2	59000333	SMX COMPRESSION SPRING D-275-A RVS
12	1	59000334	SMX COMPRESSION SPRING D-268-B
13	5	50007-12-C8D	SCREW,CAP-HEX HD (UNC 7/16")
14	1	50510-C	NUT, HEX-SLOTTED 5/8-11
15	6	50512-C	NUT, HEX-SLOTTED 3/4-10
16	1	50810-N-C	WASHER, FLAT 5/8", NARROW
17	5	51007-C	WASHER, LOCK-STEEL
18	7	51402-12	COTTER PIN 0.125X1.5
19	2	939099-516	SCREW CAP-HEX-HD DRILLED SHANK 3/4"-10 UNC X 7"
20	4	939099-96	SCREW CAP-HEX-HD DRILLED SHANK 3/4-10UNC x 3"
21	4	979770-56	40x44x50 SY Bushing
22	4	53201	FITTING, GREASE, STRAIGHT
23	2	53301-6-5	SCREW, DRIVE 0.138 DIA X 5/16
24	1	10140057-001	INFO & READ MANUAL PLATE

ITEMS 2 AND 3; "CAM LATCH" AND "CAM LATCH LOCK"
SHALL BE USED AS A SET AND BOTH ARE MARKED WITH AN IDENTICAL
UNIQUE "E" NUMBER.
REPLACE AS SET!

KIT 50006449% CONTAINS ONE CAM LATCH- AND ONE CAM LATCH LOCK
SUPPLIED WITH A GREASE NIPPLE.
AVAILABLE KITS:
-50006449 "CAM LATCH /- LOCK-I KIT SMX"
-50006449-BT "CAM LATCH /- LOCK-I-BT KIT SMX" FOR LOW TEMPERATURE
-50006449-SR4 "CAM LATCH /- LOCK-I KIT SMX-SR4" WITH
ADDITIONAL VOLUMETRIC EXAMINATION OF CASTINGS.

BOLT MOUNTING NOTES:

UNLESS WHEN SECURED BY A SPLIT PIN,
ALL BOLTS MUST BE LOCKWIRED AS PER
ABOVE SHOWN EXAMPLE.

TO PREVENT MUD INGRESS, ALL BOLTS
NEED TO BE ASSEMBLED WITH A LIBERAL
AMOUNT OF WATER RESISTANT GREASE
ON THE THREAD.

ORACLE PARTNUMBER	10143649		
LEGACY PARTNUMBER	50006460	REFERENCE ONLY	
MATERIAL			
SURF. FINISH / PAINTSPEC.	-	COLOR	RED GREEN 10,15,16
WEIGHT	921.2 Lbs	417.9 kg	
CREATED BY	Cees de Laat	REVISION	
CREATED ON	02-Oct-06		
REVISED BY	Rene Hommes		
REVISED ON	09-Apr-15 03:21:26 PM		
TC - ECR	00025554	ASM	

UNLESS OTHERWISE SPECIFIED
TOLERANCES (PER ANSI Y 14.5)
3 PLACE DECIMAL .XXX ± .010
2 PLACE DECIMAL .XX ± .03
1 PLACE DECIMAL .X ± .1
ANGLES ± .5 DEGREE
BREAK SHARP CORNERS .010 ± .005
MACHINED SURFACES 125
TORCHCUT SURFACES 1000
ALL WELD SYMBOLS ACC. TO ISO
ALL WELD DIMENSIONS ARE 2 DIM'S

DO NOT SCALE DOCUMENT
THIS DOCUMENT IS NOV TEAMCENTER CONTROLLED

NOV
NATIONAL OILWELL VARCO

SCALE 1:5
UNITS INCH (mm)
PROJ.

TITLE	SIZE	DRAWING NO.	SHEET
ASSY SMX 18" - 24-1/2" 250TON	D	50006460	1 OF 2

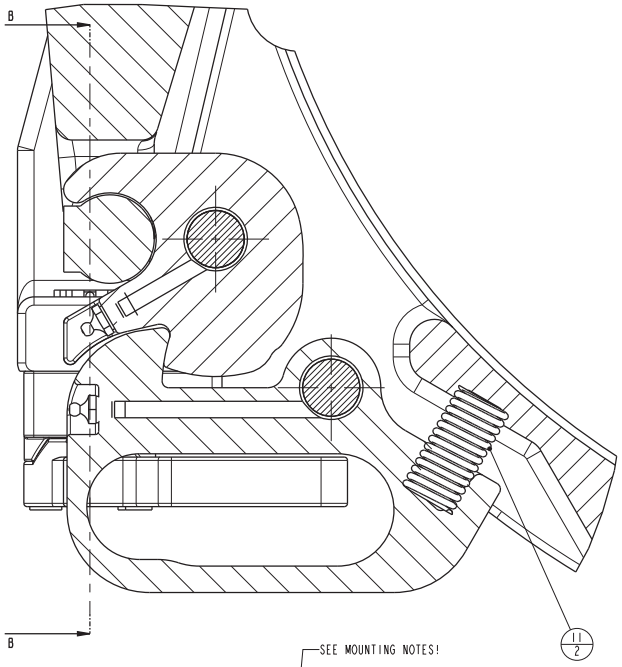

SECTION A-A
SCALE 1:1

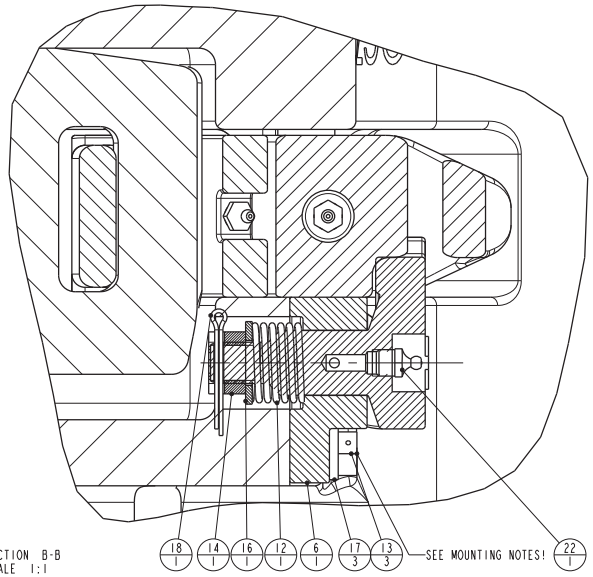

SECTION B-B
SCALE 1:1

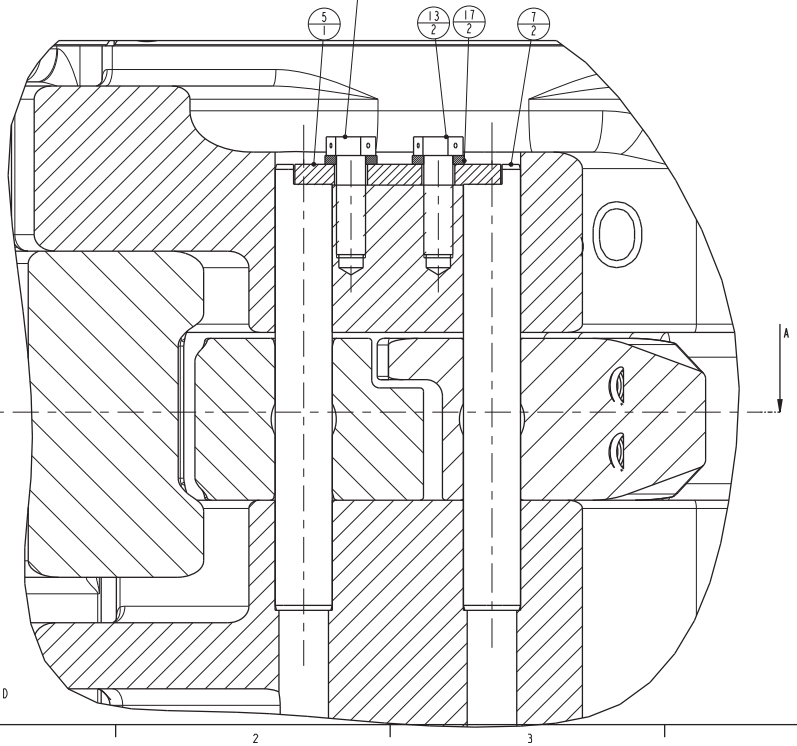

SECTION D-D
SCALE 1:1

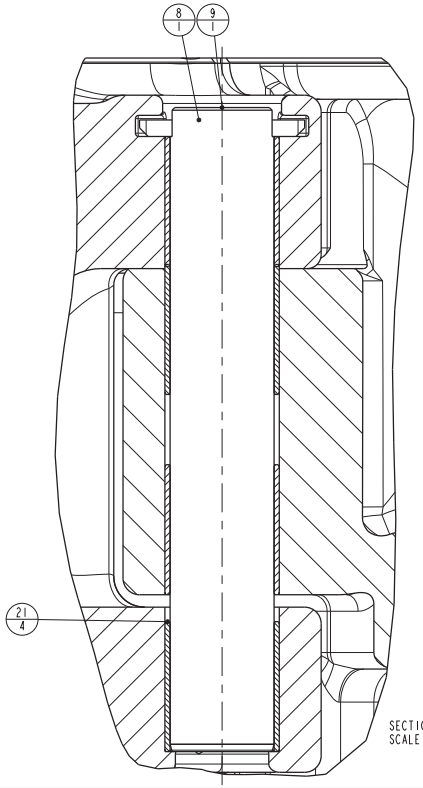

SECTION C-C
SCALE 1:1

ORACLE PARTNUMBER	10143649		
LEGACY PARTNUMBER	50006460	REFERENCE ONLY	
MATERIAL			
SURF. FINISH / PAINTSPEC.	-	COLOR	-
WEIGHT	921.2 Lbs	417.9 kg	
CREATED BY	Cees de Laat	REVISION	
CREATED ON	02-Oct-06		
REVISED BY	Rene Hommes		
REVISED ON	09-Apr-15 03:21:26 PM		
TC - ECR	00025554	ASM	

UNLESS OTHERWISE SPECIFIED
TOLERANCES (PER ANSI Y 14.5)
3 PLACE DECIMAL .XXX ± .010
2 PLACE DECIMAL .XX ± .03
1 PLACE DECIMAL .X ± .1
ANGLES ± .5 DEGREE
BREAK SHARP CORNERS .010 ± .005
MACHINED SURFACES 125
TORCHCUT SURFACES 1000
ALL WELD SYMBOLS ACC. TO ISO
ALL WELD DIMENSIONS ARE Z DIM'S

DO NOT SCALE DOCUMENT

THIS DOCUMENT IS NOV TEAMCENTER CONTROLLED

NATIONAL OILWELL VARCO

SCALE 2:5

PROJ.

UNITS INCH (mm)

TITLE
ASSY SMX 18" - 24-1/2" 250TON

SIZE D

DRAWING NO. 50006460

SHEET 2 OF 2

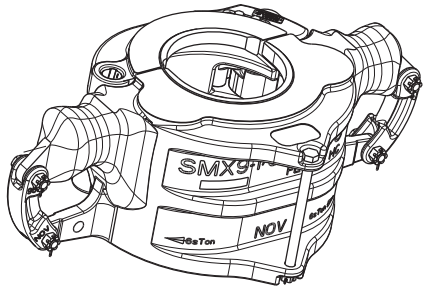

SCALE 1:5

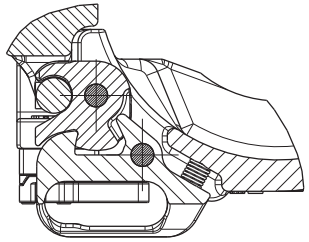

SECTION STOP-PIN-STOP-PIN

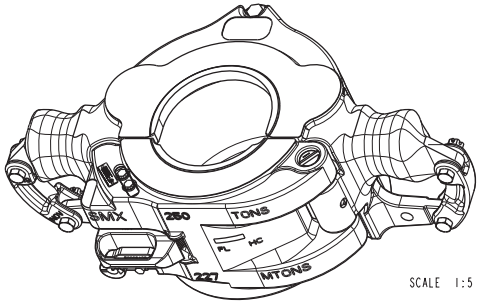

SCALE 1:5

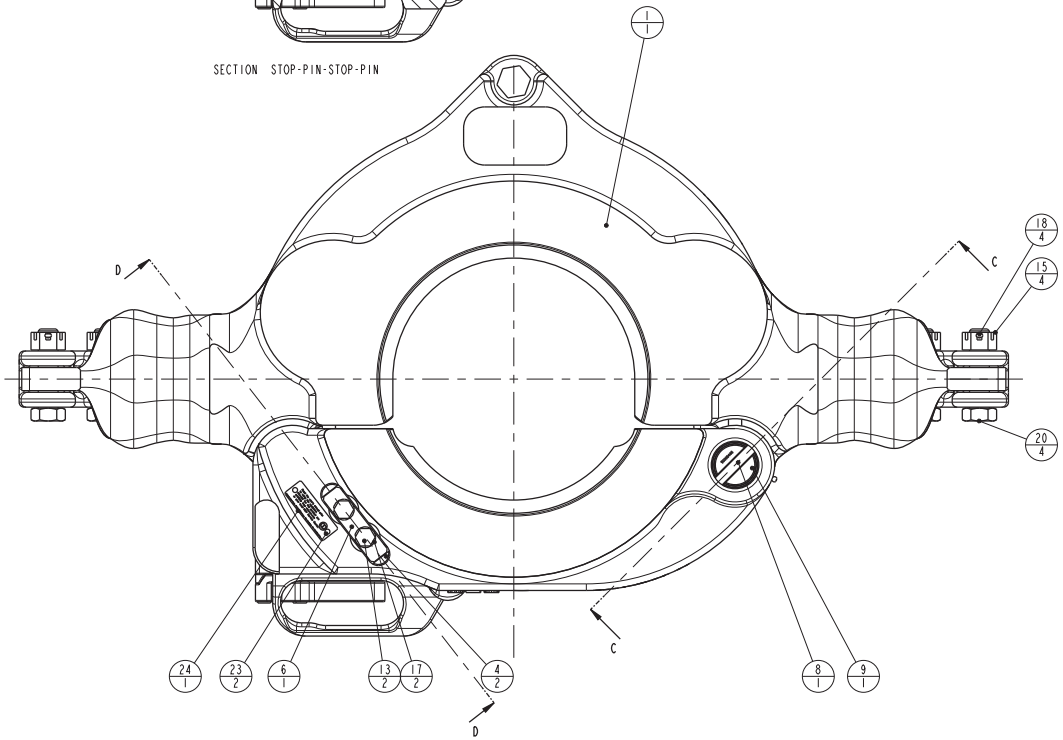

ITEM	QTY	PART NUMBER	DESCRIPTION
1	1	10721810	ASSY SMX 9-1/8" -13-3/8" MACHINING
2	1	10143503-001	SMX CAMLATCH MACHINING
3	1	10143507-001	SMX CAMLATCHLOCK MACHINING
4	2	10143511-001	SMX CAMLATCH/LOCK-PIN
5	1	10143513-001	VERIFICATION LOCK MACHINING
6	1	10143521-001	LOCK STRIP
7	1	10143522-001	LOCK STOP BLOCK MACH.
8	1	10143603-001	LOCK BAR SMX
9	1	10143605-001	HINGE PIN
10	2	10715139-001	LINK BLOCK
11	2	59000333	SMX COMPRESSION SPRING D-275-A RVS
12	1	59000334	SMX COMPRESSION SPRING D-268-B
13	5	50007-12-C8D	SCREW,CAP-HEX HD (UNC 7/16")
14	1	50510-C	NUT, HEX-SLOTTED 5/8-11
15	5	50512-C	NUT, HEX-SLOTTED 3/4-10
16	1	50810-N-C	WASHER, FLAT 5/8", NARROW
17	5	51007-C	WASHER, LOCK-STEEL
18	6	51402-12	COTTER PIN 0.125X1.5
19	1	939099-586	SCREW CAP-HEX-HD DRILLED SHANK 3/4" x 11"
20	4	939099-96	SCREW CAP-HEX-HD DRILLED SHANK 3/4-10UNC x 3"
21	4	979770-56	40x44x50 SY Bushing
22	4	53201	FITTING, GREASE, STRAIGHT
23	2	53301-4-5	SCREW, DRIVE 0.114 DIA X 5/16
24	1	10140060-001	INFO & READ MANUAL PLATE

ITEMS 2 AND 3; "CAM LATCH" AND "CAM LATCH LOCK"
SHALL BE USED AS A SET AND BOTH ARE MARKED WITH AN IDENTICAL
UNIQUE "E" NUMBER.
REPLACE AS SET!

KIT 50006449% CONTAINS ONE CAM LATCH- AND ONE CAM LATCH LOCK
SUPPLIED WITH A GREASE NIPPLE.
AVAILABLE KITS:
-50006449 "CAM LATCH /- LOCK-I KIT SMX"
-50006449-BT "CAM LATCH /- LOCK-I-BT KIT SMX" FOR LOW TEMPERATURE
-50006449-SR4 "CAM LATCH /- LOCK-I KIT SMX-SR4" WITH
ADDITIONAL VOLUMETRIC EXAMINATION OF CASTINGS.

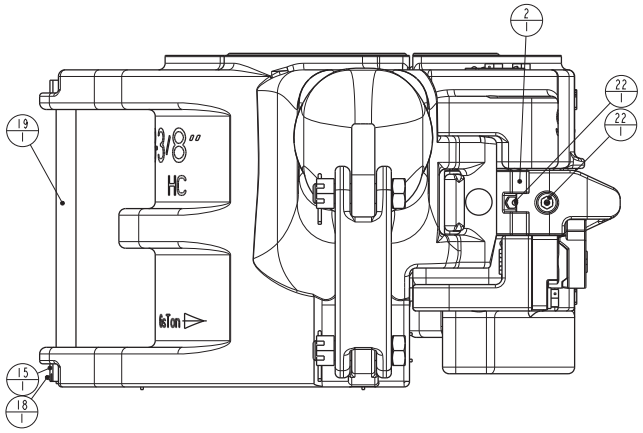

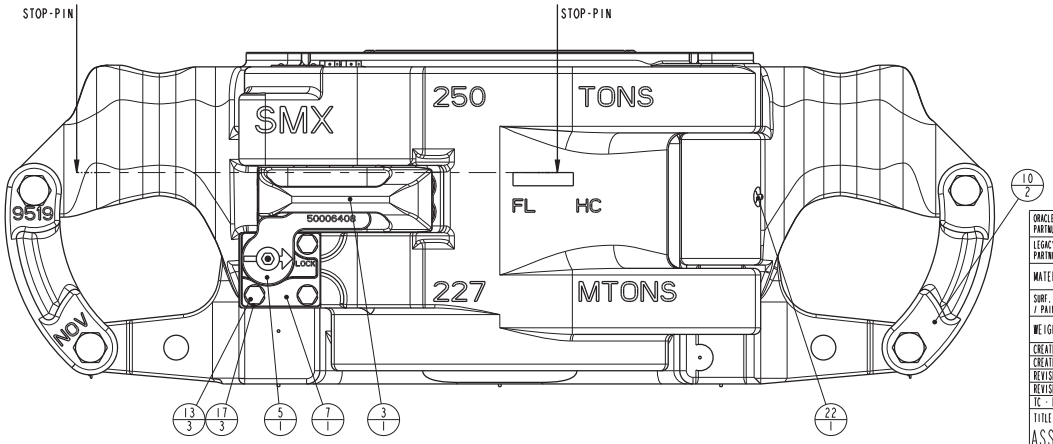

BOLT MOUNTING NOTES:

UNLESS WHEN SECURED BY A SPLIT PIN,
ALL BOLTS MUST BE LOCKWIRED AS PER
SHOWN EXAMPLE.

TO PREVENT MUD INGRESS, ALL BOLTS
NEED TO BE ASSEMBLED WITH A LIBERAL
AMOUNT OF WATER RESISTANT GREASE
ON THE THREAD.

ORACLE PARTNUMBER	10721814		
LEGACY PARTNUMBER	50006740	REFERENCE ONLY	
MATERIAL			
SURF. FINISH / PAINTSPEC.	-	COLOR	RED GREEN 10,16,18
WEIGHT	615.1 Lbs	279.0 kg	
CREATED BY	Cees de Laat	REVISION	
CREATED ON	05-Oct-07		
REVISED BY	Rene Hommes		
REVISED ON	09-Apr-15 11:47:25 AM		
TC - ECR	00025554	ASM	

UNLESS OTHERWISE SPECIFIED
TOLERANCES (PER ANSI Y 14.5)
3 PLACE DECIMAL .XXX ± .010
2 PLACE DECIMAL .XX ± .03
1 PLACE DECIMAL .X ± .1
ANGLES ± .5 DEGREE
BREAK SHARP CORNERS .010 ± .005
MACHINED SURFACES 125
TORCHCUT SURFACES 1000
ALL WELD SYMBOLS ACC. TO ISO
ALL WELD DIMENSIONS ARE 2 DIM'S

DO NOT SCALE DOCUMENT

THIS DOCUMENT IS NOV TEAMCENTER CONTROLLED

NOV
NATIONAL OILWELL VARCO

SCALE 2:5

PROJ.

UNITS INCH (mm)

TITLE: ASSY SMX 9-1/8" - 13-3/8" 250TON

SIZE: D

DRAWING NO. 50006740

SHEET 1 OF 2

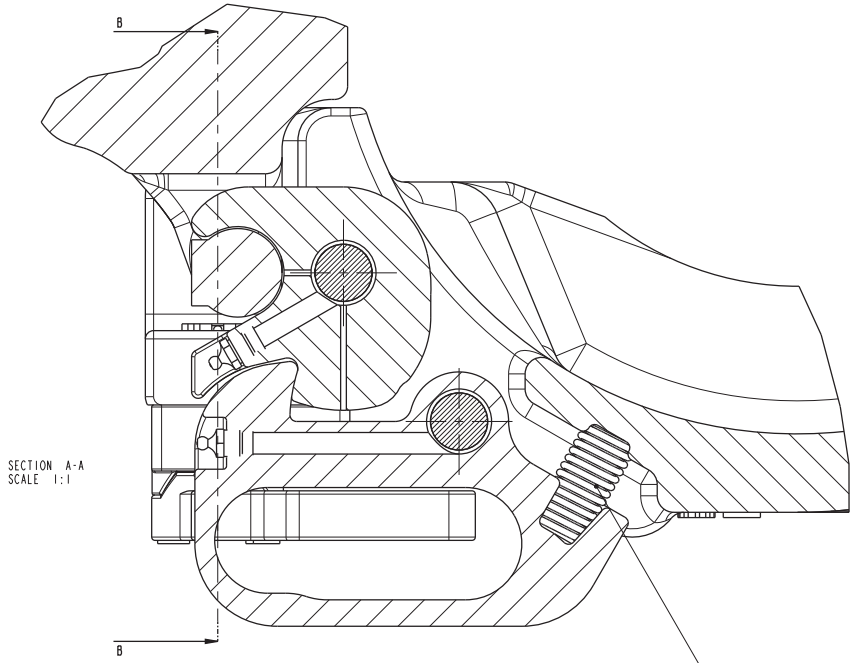

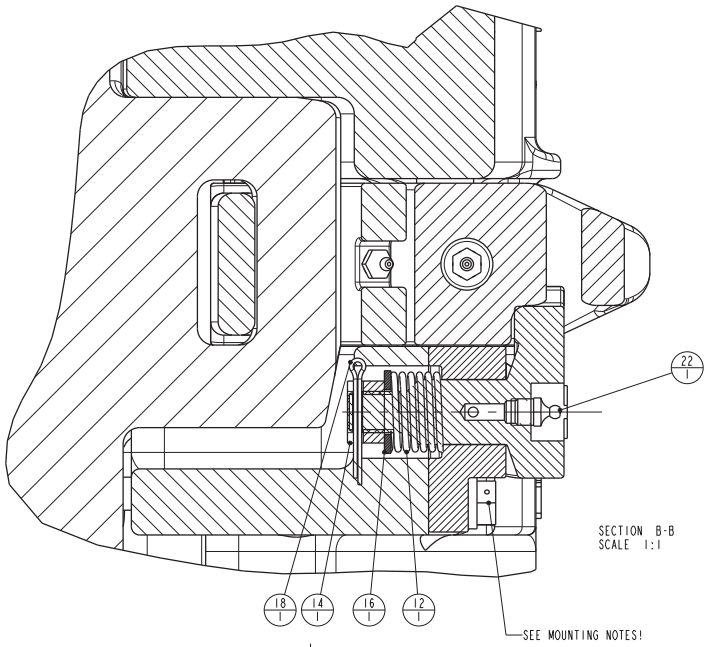

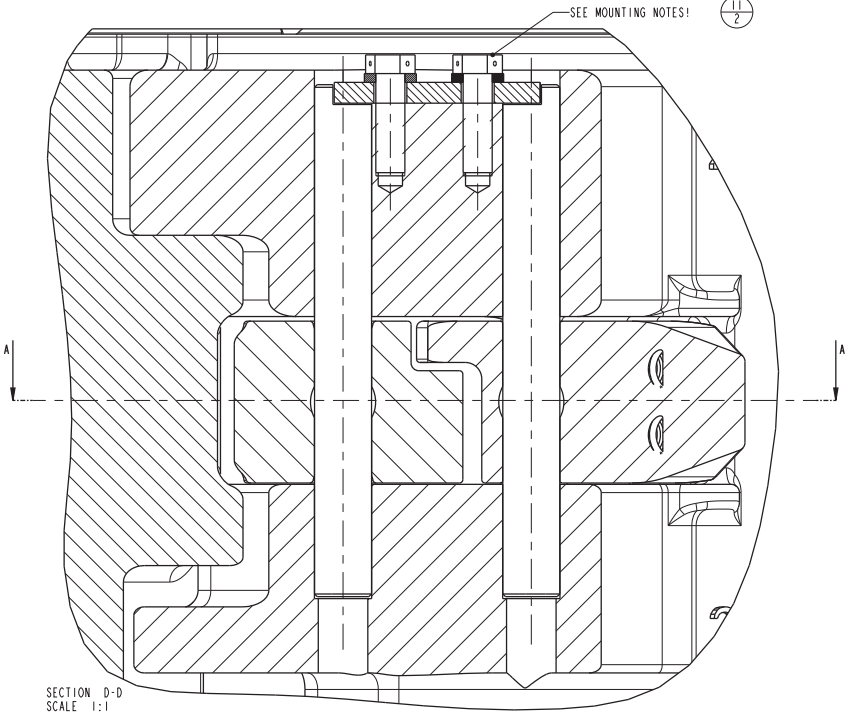

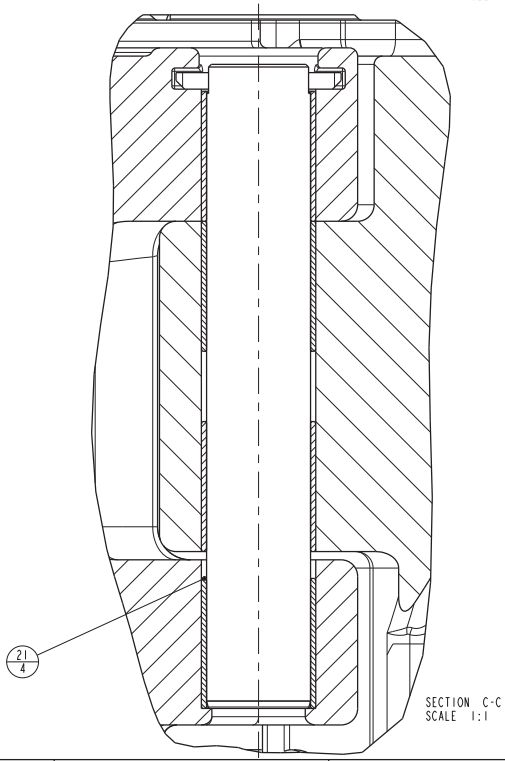

ORACLE PARTNUMBER	10721814		
LEGACY PARTNUMBER	50006740	REFERENCE ONLY	
MATERIAL			
SURF. FINISH / PAINTSPEC.	-	COLOR	-
WEIGHT	615.1 Lbs	279.0 kg	
CREATED BY	Cees de Laat	REVISION	
CREATED ON	05-Oct-07		
REVISED BY	Rene Hommes		
REVISED ON	09-Apr-15 11:47:25 AM		
TC - ECR	00025554	ASM	

UNLESS OTHERWISE SPECIFIED
TOLERANCES (PER ANSI Y 14.5)
3 PLACE DECIMAL .XXX ± .010
2 PLACE DECIMAL .XX ± .03
1 PLACE DECIMAL .X ± .1
ANGLES ± .5 DEGREE
BREAK SHARP CORNERS .010 ± .005
MACHINED SURFACES 125
TORCHCUT SURFACES 1000
ALL WELD SYMBOLS ACC. TO ISO
ALL WELD DIMENSIONS ARE 2 DIM'S

DO NOT SCALE DOCUMENT
THIS DOCUMENT IS NOV TEAMCENTER CONTROLLED

NATIONAL OILWELL VARCO

SCALE 2:5
PROJ.
UNITS INCH (mm)

TITLE
ASSY SMX 9-1/8" - 13-3/8" 250TON

SIZE D
DRAWING NO. 50006740
SHEET 2 OF 2

PART NUMBER 30598

STAMP HERE: SERIAL NUMBER
PART NUMBER
RELEVANT P.S.L. & S.R.-NUMBERS
AND API LOGO
AFTER Q.C. ACCEPTANCE

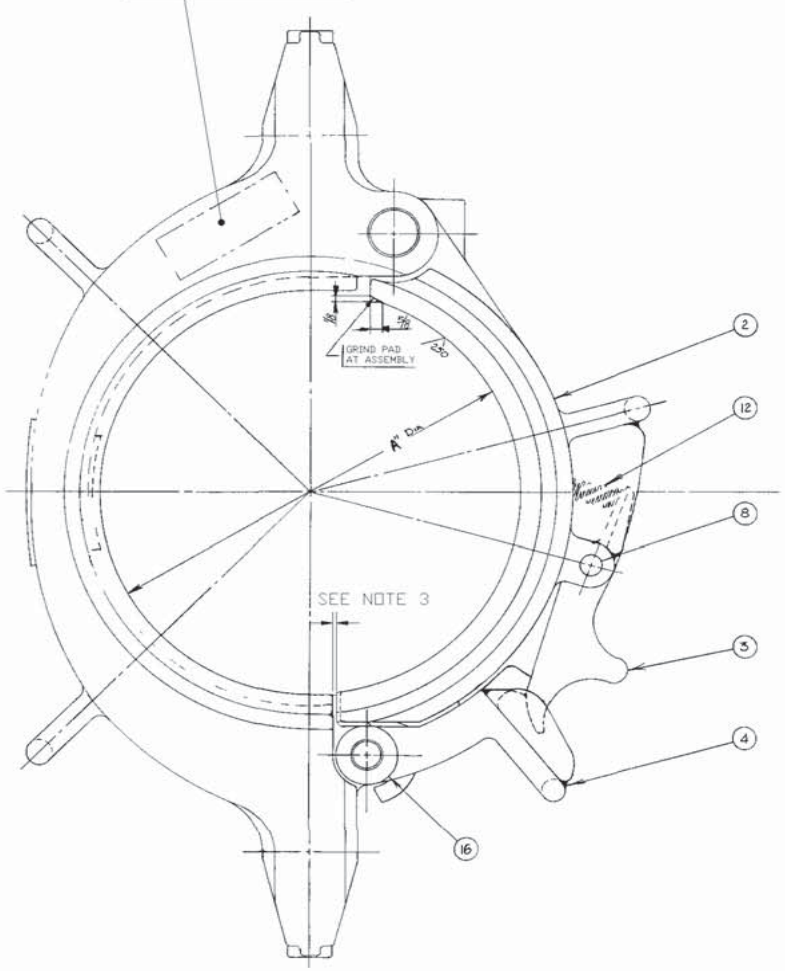

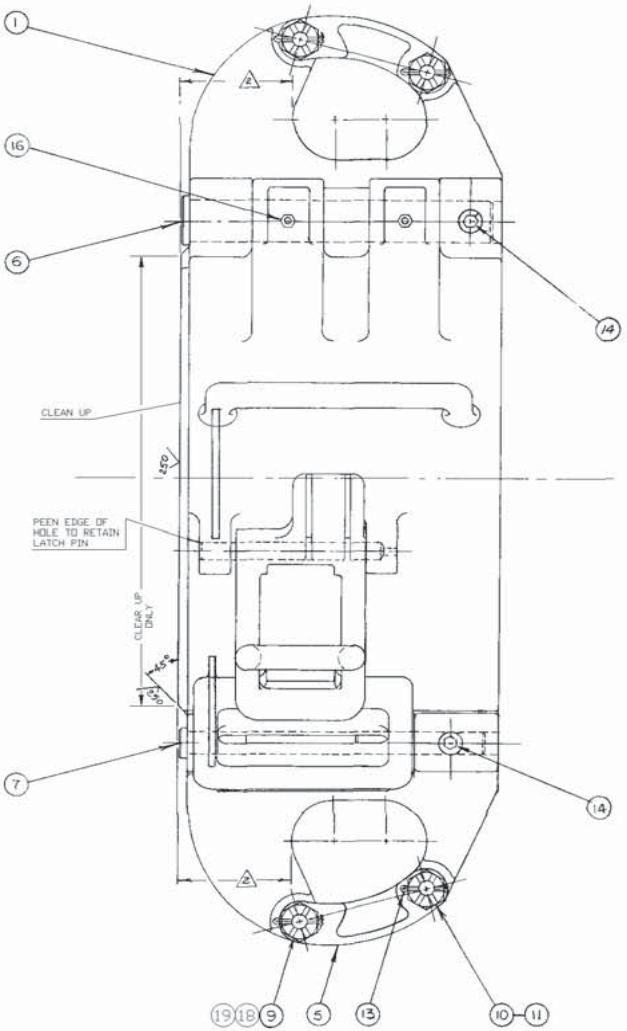

ITEM	QTY	DWG. SIZE	PART NUMBER	DESCRIPTION
1	1	–	30596	BODY
2	1	–	30595	DOOR
3	1	–	6021	LOCK, LATCH
4	1	–	30597	LATCH
5	2	–	9519	LINK BLOCK
6	1	–	29956	PIN, HINGE
7	1	–	29951	PIN, LATCH
8	1	–	6027	PIN–LOCK, LATCH
9	2	–	939099–97	HEX. HEAD CAP SCREW
10	2	–	8145	LINK BLOCK BOLT
11	2	–	50512–C	NUT HEX–SLOTTED 3/4"x10 UNC
12	2	–	30657	SPRING–LOCK, LATCH
13	2	–	51402–12	PIN COTTER "A" 1/8 X 1.5
14	2	–	50712–8.B.C	SCREW SET SOCKET HEAD 3/4"
15	–	–	–	–
16	4	–	53201	FITTING GREASE STRAIGHT 1/8
17	–	–	–	–
18	2	–	50514–C	NUT HEX.SLOTTED 7/8"x9 UNC
19	2	–	51402–16	PIN COTTER "A" 1/8x2"
–	1	–	203429–1	SAFETY PIN KIT (NOT SHOWN)
–	–	–	–	–

NOTE:
1. BORE AND TURN TOP SURFACE OF ELEVATOR AS AN ASSEMBLY WEDGE DOOR DOWN AGAINST BODY AND OUT AGAINST LATCH WHILE MACHINING
2. DISTANCE FROM UNDERSIDE OF LINK EARS TO TOP MACHINED SURFACE OF ELEVATOR MUST BE EQUAL WITHIN 1/16" GRIND UNDERSIDE OF LINK EARS IF NECESSARY.
3. GRIND TO PROVIDE CLEARANCE REQUIRED FOR UNLATCHING.

CASING SIZE	"A"
18.5/8	18.7/8
20	20.1/4

PART NO.	QTY.	NEXT ASSY	FINAL ASSY
30598	1	–	30598

Varco BJ
OIL TOOLS
ETEN-IJSUE, THE NETHERLANDS

UNLESS OTHERWISE SPECIFIED
TOLERANCES (PER ANSI Y 14.5)
3 PLACE DECIMAL .XXX ± .005
2 PLACE DECIMAL .XX ± .03
1 PLACE DECIMAL .X ± .2
ANGLES ± 0 DEGREE
BREAK SHARP CORNERS .005 ± .005
MACHINED SURFACES

	NAME	DATE
DRAWN	A.v.L.	11-19-'96
CHECKED	F.S.	11-19-'96
APPROVED	C.D.	11-19-'96

PROJ. ⊕ ⊕
MATERIAL NOTED
SCALE NONE
UNITS INCH (MM)
WEIGHT LBS/ KG

REV.	C.O.N.	NAME	DATE	CHECKED
N	30597	A.v.L.	11-19-'96	F.S.
L	–	–	–	–
K	–	–	–	–
J	–	–	–	–
H	–	–	–	–
G	–	–	–	–
F	–	–	–	–
E	–	–	–	–
D	–	–	–	–
C	–	–	–	–
B	–	–	–	–
A	–	–	–	–

ADAD FILE NO. :

TITLE ASS'Y MODEL "SX" SIDE DOOR
TYPE ELEV. 18.5/8 – 20 250 TON

SIZE D DRAWING NO. 30598 SHEET 1 OF 1

REDRAWN / REPLACED BY:
REPLACES: D-30598 REV.N DD.12-2-'95

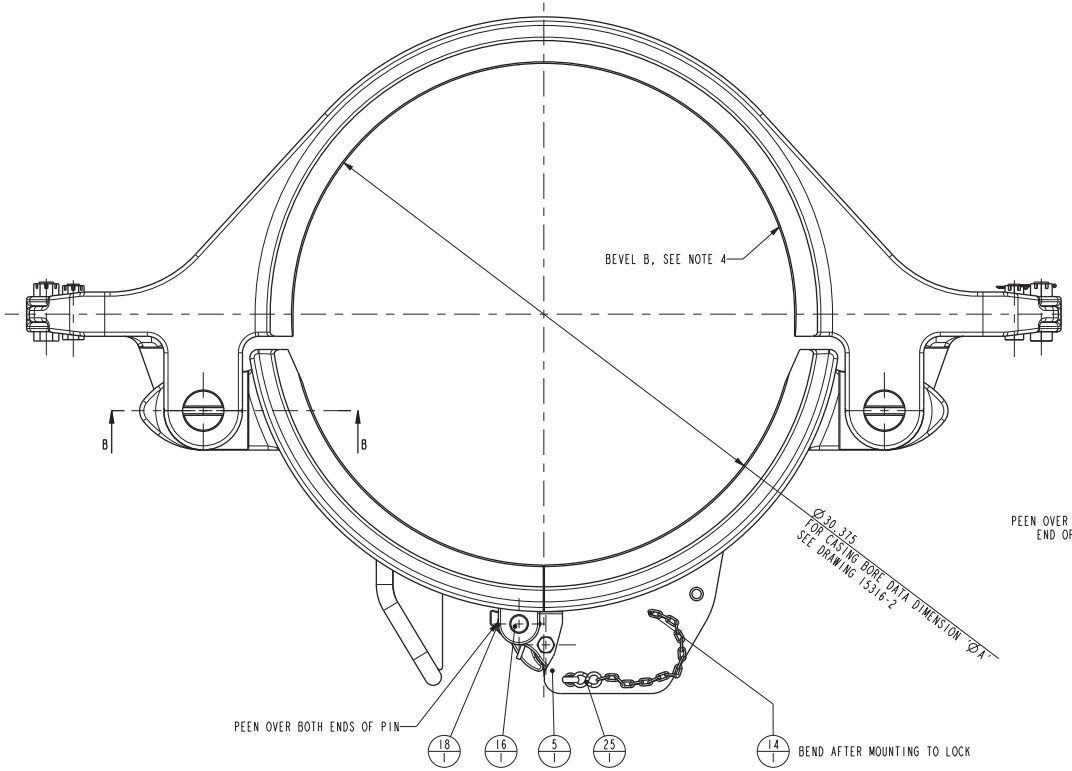

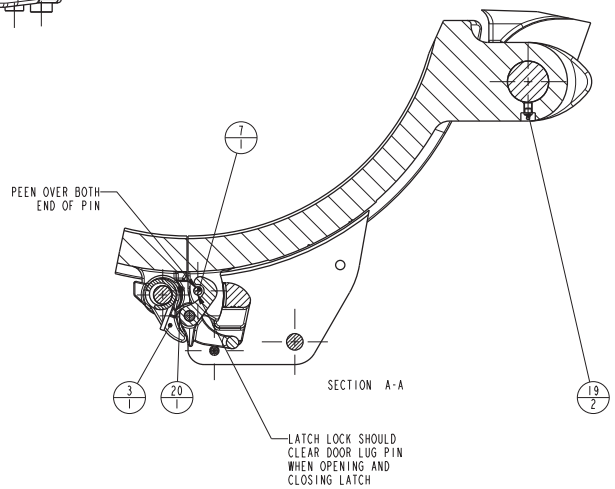

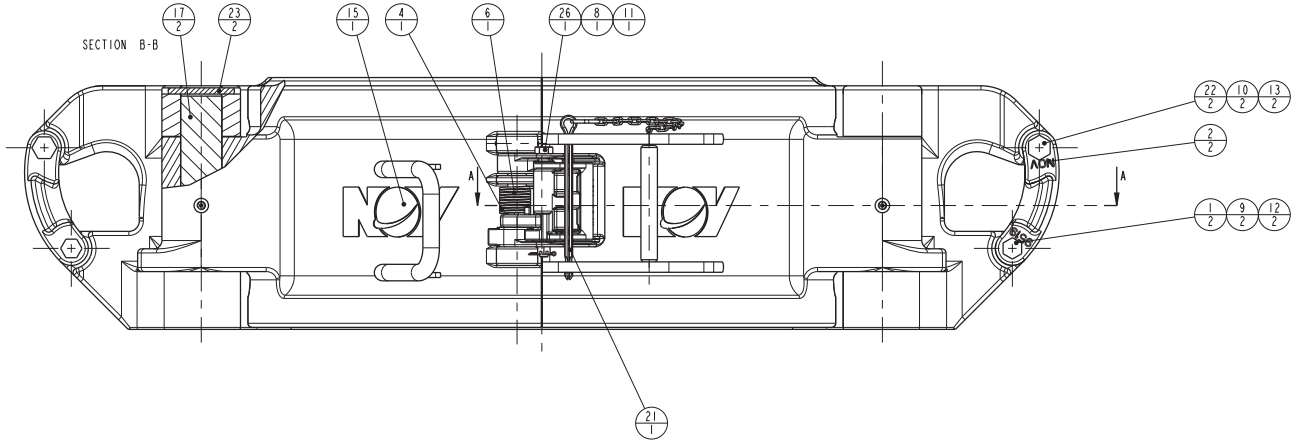

ITEM	QTY	PART NUMBER	DESCRIPTION
1	2	8145	SCREW CAP-HEX-HD DRILLED SHANK 3/4
2	2	9519	LINK BLOCK
3	1	11581-M	Machining Latch Cam
4	1	11763-M	Machining Latch SLX-AA-MAA-MG-MG-RA ELEVATOR
5	1	11764	Latch Lock Elevator
6	1	11766	LATCH SPRING TYPE SJL/SPL ELEVATOR
7	1	12529	DOOR LUG PIN
8	1	50508-C	NUT, HEX-SLOTTED 1/2-13
9	2	50512-C	NUT, HEX-SLOTTED 3/4-10
10	2	50514-C	NUT, HEX-SLOTTED 7/8-9
11	1	51402-10	COTTER PIN 1/8 x 1 1/4
12	2	51402-12	COTTER PIN 0.125X1.5
13	2	51402-16	COTTER PIN 0.125 x 1.9
14	1	51403-12	COTTER PIN 3/16 X 1 1/2
15	1	52755-M	MACHING 24-30" 150 SLX ELEVATOR
16	1	52760	Latch Pin 24"-30" 150 SsTON
17	2	52763	Hinge pin-DBL door-elevator
18	1	52810	Dowel Pin - 24"-30" 150 Ston SLX
19	2	53201	GREASE FITTING, STRAIGHT
20	1	53204	STRAIGHT GREASE FITTING
21	1	202850-3	LATCH RETAINING PIN 1/2" X 5.1/4"
22	2	939099-97	SCREW CAP-HEX-HD DRILLED SHANK 7/8
23	2	943632-405	Round Key SLX, dia. 3/8" X 4"
24	1	948042-416	chain straight link 4, 18 segments
25	1	948051-2	S-HOOK
26	1	10691571-001	Latch Lock bolt

Bore	BEVEL B x45°
< 26"	0.063"
26" and bigger	0.094"

NOTES:
1) MOUNT S-HOOK 948051-2 TO LOCK PIN 202850-3.
2) MOUNT THE CHAIN 948042-416 TO THE S-HOOK, WELD THE S-HOOK AFTER MOUNTING THE CHAIN.
3) WEIGHT DEPENDS ON BORE.

REVISION L: PICTORIAL CHANGE

PARTNUMBER	52755
MATERIAL	
SURF. FINISH / PAINTSPEC.	-
COLOR	-
WEIGHT	~~1595.4 Lbs~~ ~~723.7~~ kg
CREATED BY	Sonneveld, Leon
CREATED ON	01-May-13 12:33:42 PM
REVISED BY	Sonneveld, Leon
REVISED ON	01-May-13 04:47:28 PM
TC - ECR	00014960 DAD
REVISION	L

UNLESS OTHERWISE SPECIFIED
TOLERANCES (PER ANSI Y 14.5)
3 PLACE DECIMAL .XXX ± .010
2 PLACE DECIMAL .XX ± .03
1 PLACE DECIMAL .X ± .1
ANGLES ± .5° DEGREE
BREAK SHARP CORNERS .010 ± .005
MACHINED SURFACES 125
TORCHCUT SURFACES 1000
ALL WELD SYMBOLS ACC. TO ISO
ALL WELD DIMENSIONS ARE 2 DIM'S

DO NOT SCALE DOCUMENT
THIS DOCUMENT IS NOV TEAMCENTER CONTROLLED

NATIONAL OILWELL VARCO

SCALE 1:4
UNITS INCH (mm)
PROJ.

TITLE
Ass'y, 24"-30", 150 Ston, SLX Elevator

SIZE D
DRAWING NO. 52755
SHEET 1 OF 1

PART NUMBER	200022(–)

ITEM	QTY	DWG. SIZE	PART NUMBER	DESCRIPTION

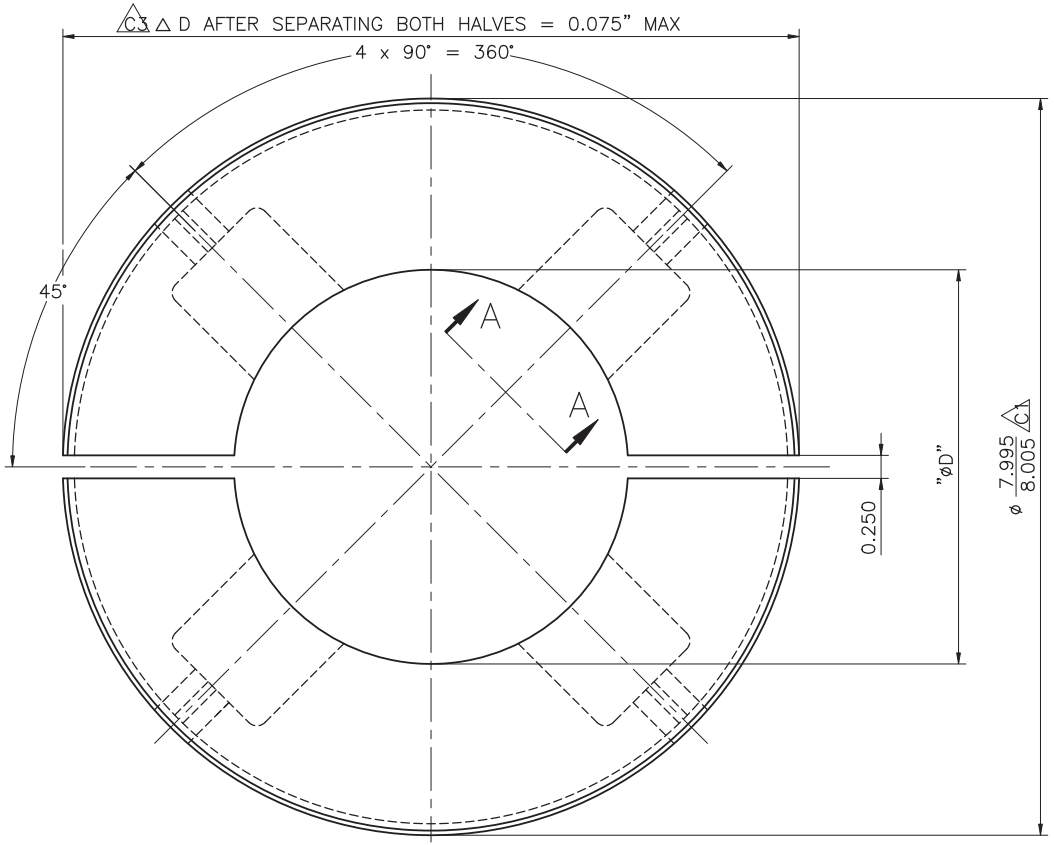

VIEW A–A

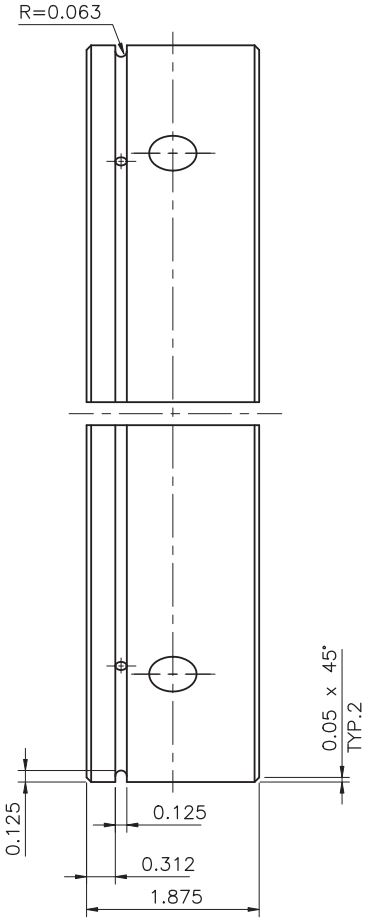

SECTION B–B

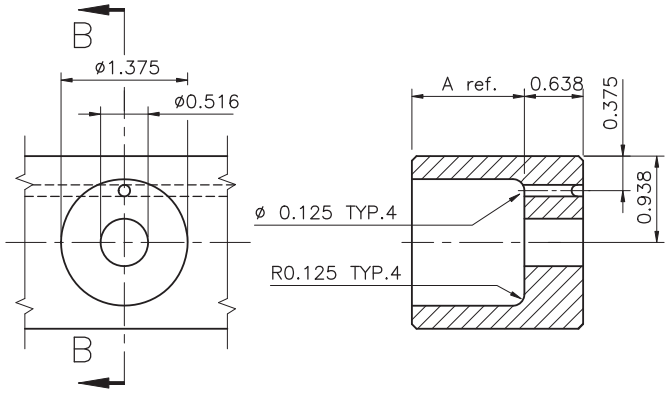

BORE CODE		øD	A
119	#	3.781	1.472
120	#	3.969	1.378
121		4.281	1.222
122		4.781	0.972
123		5.250	0.738
124		5.813	0.456
798	#	4.188	1.269
805		4.688	0.769

D1 E1

FOR MGG ONLY.

PART NO.	QTY.	NEXT ASS'Y	FINAL ASS'Y
200022(–)	1	–	200060(–) 200059(–) 200058(–) 200057(–) 200056(–) 200024(–)

C2

Varco BJ OIL TOOLS
ETTEN-LEUR, THE NETHERLANDS

UNLESS OTHERWISE SPECIFIED
TOLERANCES (PER ANSI Y 14.5)
3 PLACE DECIMAL .XXX ± .010
2 PLACE DECIMAL .XX ± .03
1 PLACE DECIMAL .X ± .1
ANGELS ± .5 DEGREE
BREAK SHARP CORNERS .010 ± .005
MACHINED SURFACES 250

	NAME	DATE	PROJ.
PREPARED	H.v.R.	3-24-'93	
CHECKED	AdP	3-30-93	SCALE 1 : 1
APPROVED	DBM	3-30-93	UNITS INCH (MM)

MATERIAL NYLATRON NSM
COLOR: BLACK
WEIGHT 3 (pair) LBS/ 1.5 (pair) KG

REV.	E.C.N.	NAME	DATE	CHECKED
M				
L				
K				
J				
H				
G				
F				
E	600733	A. de Pont	03-19-'02	K. Phillips
D	600113	B&J	12/13/'00	AdP
C	11193	EB	7 DEC '93	
B	X 11116	H.v.R.	3-24-'93	DBM
A	X			

ACAD FILE NO. : —

TITLE WEAR BUSHING GG/MGG/HGG ELEVATOR
BORECODE 119/–124, 798. 805

SIZE C | DRAWING NO. 200022(–) | SHEET 1 OF 1

REDRAWN / REPLACED BY:

REPLACES: C-200022(–) REV.B DATED:7-15-'92

SEE NOTE 1.

ITEM	QTY.	PARTNUMBER	DESCRIPTION
1	1	10153853–***	GG elevator without bore
2	1	10137213–***	Wear bushing
3	4	939098–406	Hexagon head cap screw
4	4	939352–61	Spring washer
5	2	947879–25	Lock wire

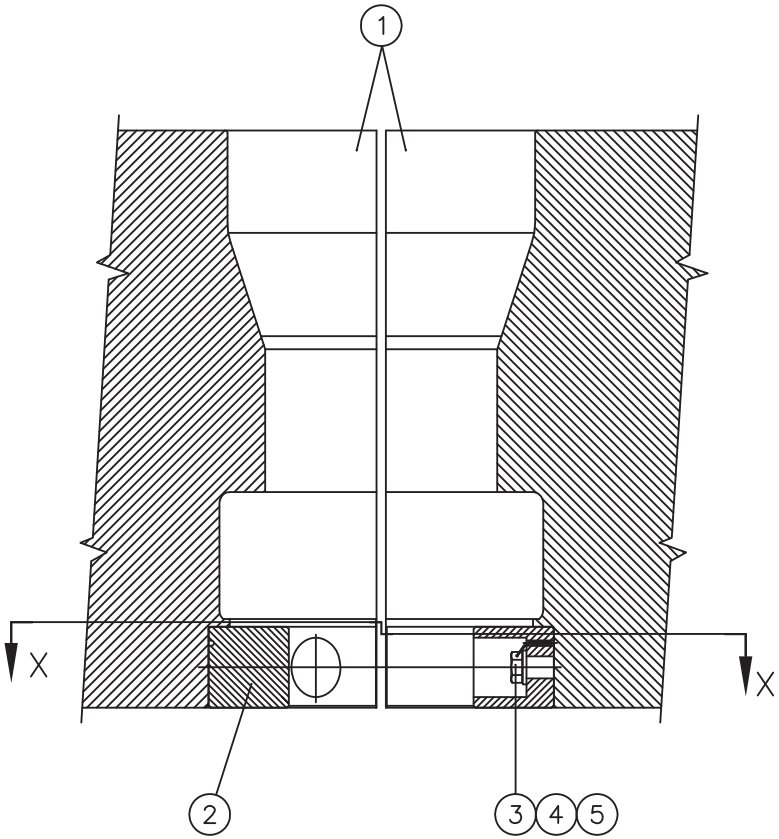

SECTION Y–Y

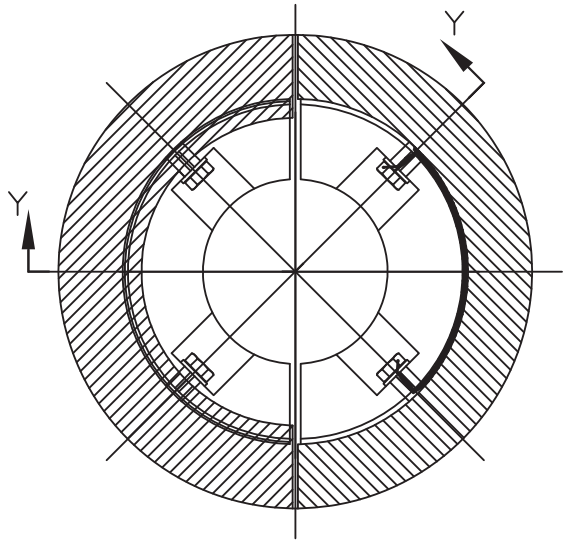

SECTION X–X

USABLE FOR BORECODE
121
122
123
124
756
805

D –CHANGED PARTNUMBER.
–REMOVED BORECODE DIMENSIONS.
–UPDATED DRAWING.

ORACLE PART NUMBER	10021851–***		
LEGACY PART NUMBER	200056(–)	REFERENCE ONLY	
MATERIAL	SEE PL 200056(–)		
SURF. FINISH/ PAINT SPEC	–	COLOR	–
WEIGHT	717 LBS/	325 KG	

UNLESS OTHERWISE SPECIFIED TOLERANCES (PER ANSI Y 14.5)
3 PLACE DECIMAL .XXX ± .010
2 PLACE DECIMAL .XX ± .03
1 PLACE DECIMAL .X ± .1
ANGLES ± .5 DEGREE
BREAK SHARP CORNERS .010-.005
MACHINED SURFACES 250
TORCHCUT SURFACES 1000
ALL WELD SYMBOLS ACC. TO ISO
ALL WELD DIMENSIONS ARE ± DIM'S

NATIONAL OILWELL VARCO

CREATED BY	Mike Dearden	REV.	
CREATED ON	24-Mar-93		
REVISED BY	Hans van Rijzingen		
REVISED ON	17-Sep-13	DAD	D
TC-ECR	00018304		

DO NOT SCALE DOCUMENT
THIS DOCUMENT IS TEAMCENTER CONTROLLED
SCALE 1 : 1
UNITS INCH (MM)
PROJ.

TITLE
ASSEMBLY GG ELEVATOR WITH WEARBUSHING

SIZE C | DRAWING NO. 200056(–) | SHEET 1 OF 1

NOTES:
1. WHEN BORE 123 IS APPLICABLE THE PARTNUMBER IS 10111324–001.

ITEM	QTY.	PARTNUMBER	DESCRIPTION
1	1	SEE NOTE 2.	HGG elevator without bore
2	1	10137213–***	Wear bushing
3	4	939098–406	Hexagon head cap screw
4	4	939352–61	Spring washer
5	2	947879–25	Lock wire

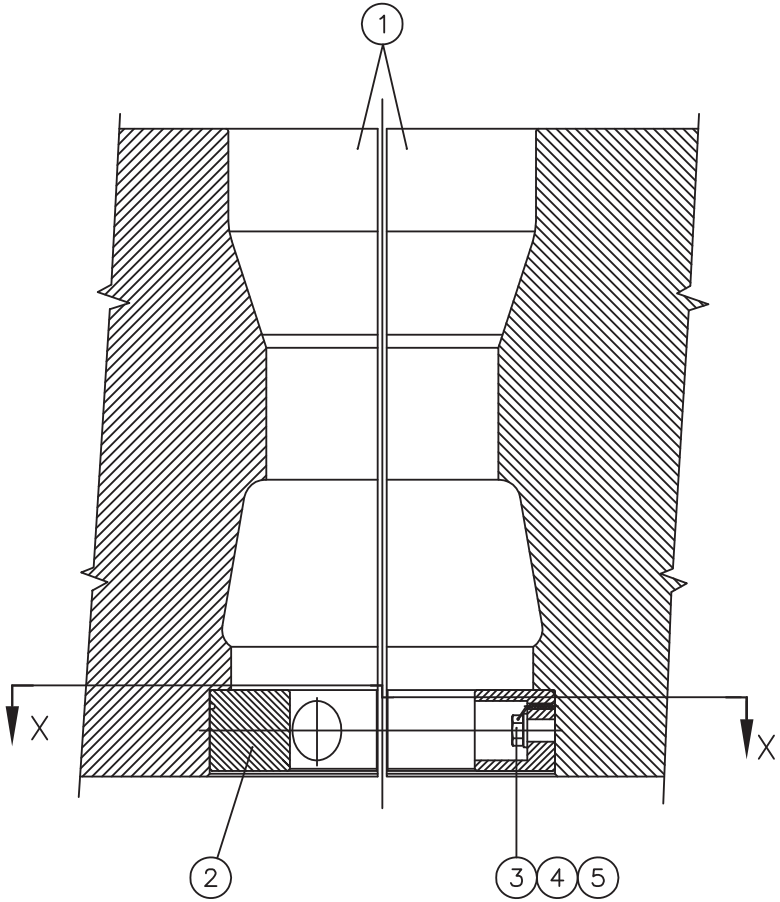

SECTION Y–Y

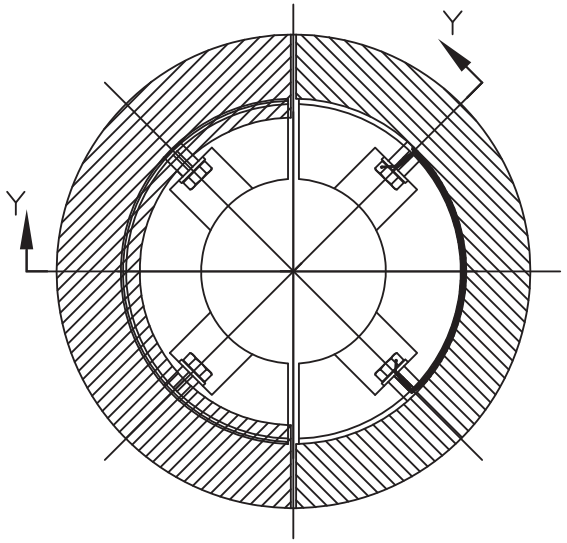

SECTION X–X

USABLE FOR BORECODE
121
122
123
124

D –CHANGED PARTNUMBER.
–REMOVED BORECODE DIMENSIONS.
–UPDATED DRAWING.

SEE NOTE 1.

ORACLE PART NUMBER	10137268–***		
LEGACY PART NUMBER	200060(–)	REFERENCE ONLY	
MATERIAL	SEE PL 200060(–)		
SURF. FINISH/ PAINT SPEC	–	COLOR	–
WEIGHT	1002LBS/	455 KG	
CREATED BY	Hans van Rijzingen	REV.	
CREATED ON	24–Mar–93		
REVISED BY	Mike Dearden		
REVISED ON	18–Sep–13	–	D
TC–ECR	00018304		

UNLESS OTHERWISE SPECIFIED TOLERANCES (PER ANSI Y 14.5)
3 PLACE DECIMAL .XXX ± .010
2 PLACE DECIMAL .XX ± .03
1 PLACE DECIMAL .X ± .1
ANGLES ± .5 DEGREE
BREAK SHARP CORNERS .010±.005
MACHINED SURFACES 250√
TORCHCUT SURFACES 1000√
ALL WELD SYMBOLS ACC. TO ISO
ALL WELD DIMENSIONS ARE ± 2 mm'S

NATIONAL OILWELL VARCO

DO NOT SCALE DOCUMENT
THIS DOCUMENT IS TEAMCENTER CONTROLLED

SCALE 1 : 1
UNITS INCH (MM)
PROJ.

TITLE
ASSEMBLY HGG ELEVATOR WITH WEARBUSHING

SIZE C | DRAWING NO. 200060(–) | SHEET 1 OF 1

NOTES:
1. WHEN BORE 123 IS APPLICABLE THE PARTNUMBER WILL BE 10111257–***.
WHEN BORE 124 IS APPLICABLE THE PARTNUMBER WILL BE 10022107–***.
2. WHEN BORE 121 IS APPLICABLE THE PARTNUMBER WILL BE 10146327–***.
WHEN BORE 122 IS APPLICABLE THE PARTNUMBER WILL BE 10146328–***.
WHEN BORE 123 IS APPLICABLE THE PARTNUMBER WILL BE 10146329–***.
WHEN BORE 124 IS APPLICABLE THE PARTNUMBER WILL BE 10146330–***.

SEE NOTE 2.

ITEM	QTY.	ORACLE PARTNR.	DESCRIPTION
1	1	10137279–***	Machining HGG air operated elevator
2	1	10137285–***	Wear bushing
3	4	939098–406	Hexagon head cap screw
4	4	939352–61	Spring washer
5	2	947879–25	Lock wire

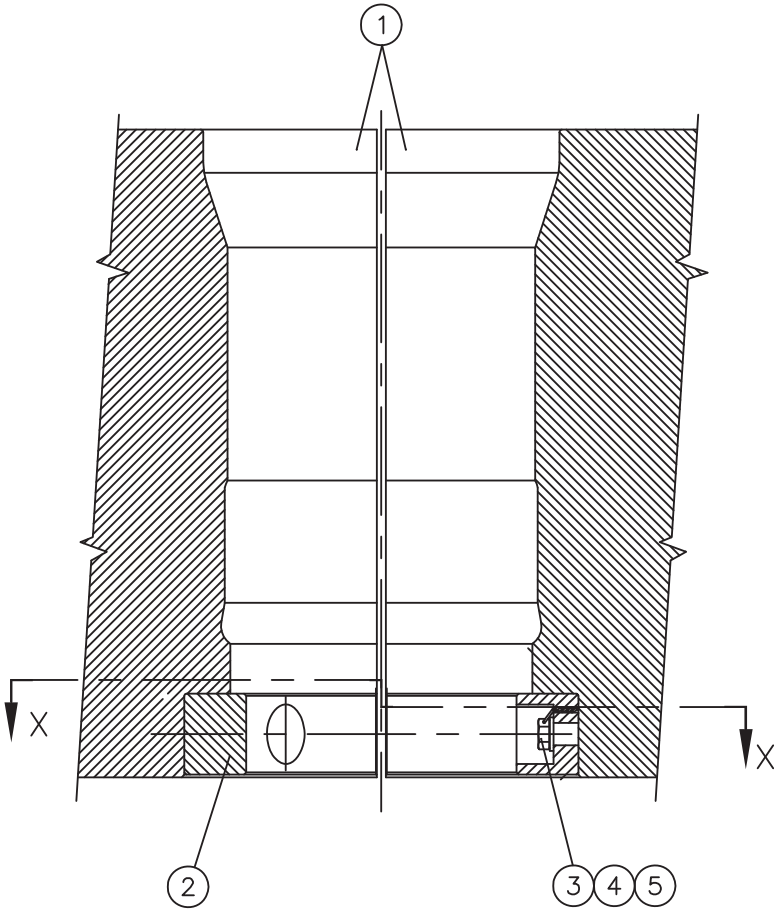

SECTION Y–Y

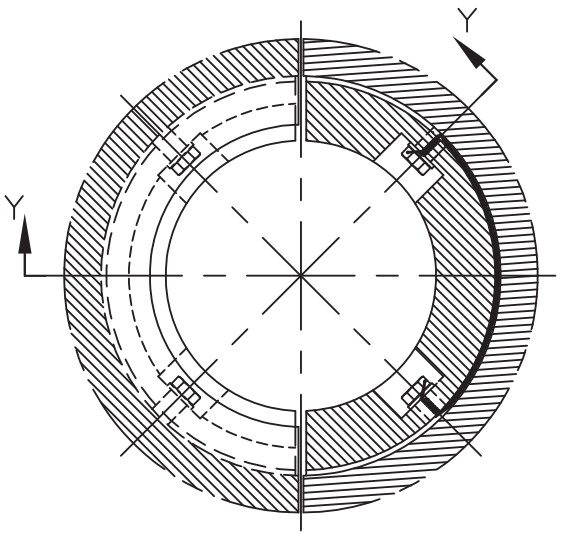

SECTION X–X

USABLE FOR BORECODE
678
740
770
789

SEE NOTE 1.

F –CHANGED PARTNUMBER.
–REMOVED BORECODE DIMENSIONS.
–UPDATED DRAWING.

ORACLE PART NUMBER	10137279–***		
LEGACY PART NUMBER	200062(–)	REFERENCE ONLY	
MATERIAL	SEE PL 200062(–)		
SURF. FINISH/ PAINT SPEC	–	COLOR	–
WEIGHT	1002lbs/	455 KG	
CREATED BY	Hans van Rijzingen		
CREATED ON	24-Mar-93		
REVISED BY	Mike Dearden		
REVISED ON	18-Sep-13	DAD	REV. F
TC-ECR	00018304		

UNLESS OTHERWISE SPECIFIED TOLERANCES (PER ANSI Y 14.5)
3 PLACE DECIMAL .XXX ± .010
2 PLACE DECIMAL .XX ± .03
1 PLACE DECIMAL .X ± .1
ANGLES ± .5 DEGREE
BREAK SHARP CORNERS .010-.005
MACHINED SURFACES 250
TORCHOUT SURFACES 1000
ALL WELD SYMBOLS ACC. TO ISO
ALL WELD DIMENSIONS ARE ± 2 mm'S

NATIONAL OILWELL VARCO

DO NOT SCALE DOCUMENT | SCALE 1 : 1 | PROJ.
THIS DOCUMENT IS TEAMCENTER CONTROLLED | UNITS INCH (MM)

TITLE: ASSEMBLY HGG ELEVATOR WITH WEARBUSHING | SIZE C | DRAWING NO. 200062(–) | SHEET 1 OF 1

NOTES:
1. WHEN BORE 740 IS APPLICABLE THE PARTNUMBER WILL BE 10022145–***.
   WHEN BORE 789 IS APPLICABLE THE PARTNUMBER WILL BE 10122147–***.
2. WHEN BORE 740 IS APPLICABLE THE PARTNUMBER WILL BE 10022145–***.
   WHEN BORE 789 IS APPLICABLE THE PARTNUMBER WILL BE 10122147–***.

PART NUMBER	200070(–)

ITEM	QTY	DWG. SIZE	PART NUMBER	DESCRIPTION

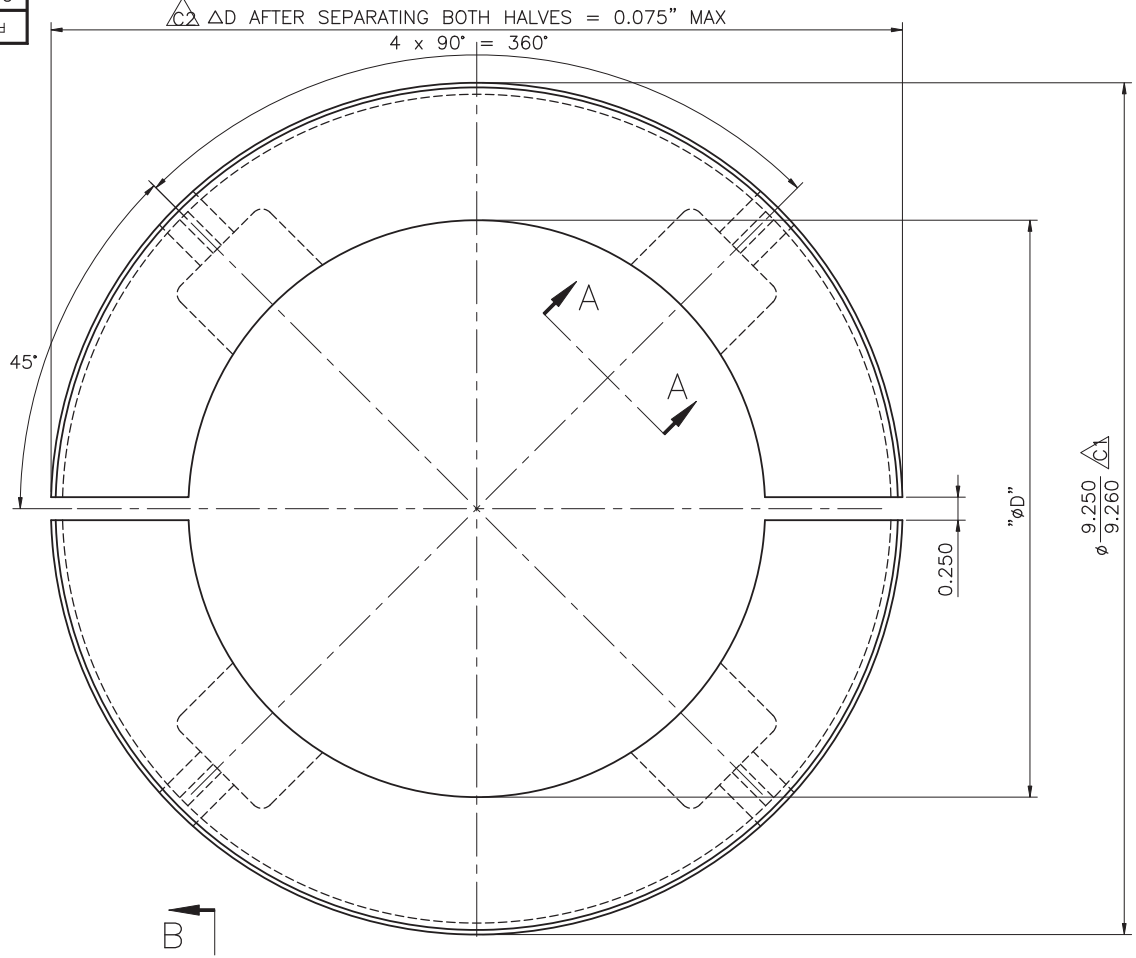

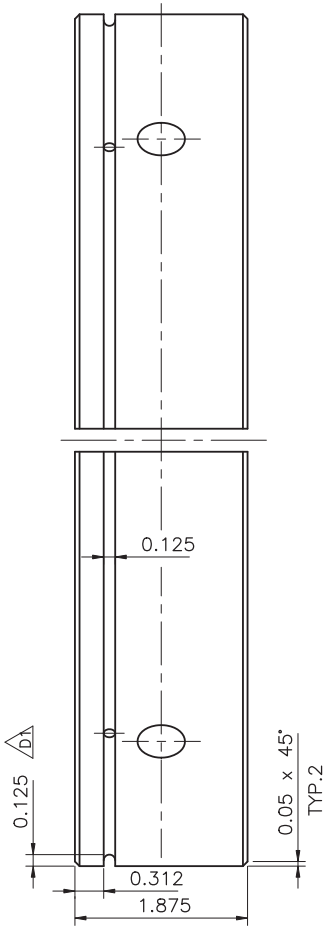

VIEW A–A

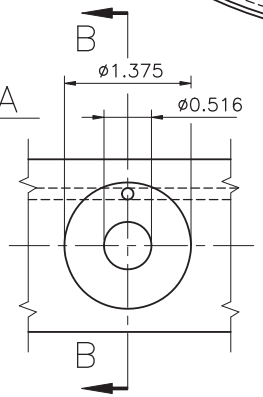

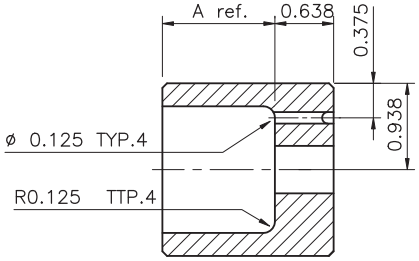

SECTION B–B

BORE CODE	øD	A
655	7.031	0.472
678	6.266	0.855
740	use 200070–655	
770	6.125	0.925
789	use 200070–770	

(Note 1: 770 also applicable for 789)
(Note 2: 655 also applicable for 740)

PART NO.	QTY.	NEXT ASS'Y	FINAL ASS'Y
200070(–)	1	–	200062(–) 200061(–)

Varco BJ OIL TOOLS
ETTEN-LEUR, THE NETHERLANDS

UNLESS OTHERWISE SPECIFIED
TOLERANCES (PER ANSI Y 14.5)
3 PLACE DECIMAL .XXX ± .010
2 PLACE DECIMAL .XX ± .03
1 PLACE DECIMAL .X ± .1
ANGELS ± .5 DEGREE
BREAK SHARP CORNERS .010 ± .005
MACHINED SURFACES 250

	NAME	DATE	PROJ.
PREPARED	H.v.R.	3-24-'93	
CHECKED	AdP	3-30-93	SCALE 1 : 1
APPROVED	DBM	3-30-93	UNITS INCH (MM)

MATERIAL NYLATRON NSM
COLOR: BLACK
WEIGHT 3 (pair) LBS/ 1.5 (pair) KG

REV.	E.C.N.	NAME	DATE	CHECKED
M				
L				
K				
J				
H				
G				
F	600668	K.P.	02-18-'02	A.d.P.
E	575501	B&J	9 Aug '99	AdP
D	11245	R.K.	5-4-'94	
C	X 11193	EB	7 DEC '93	H.v.R.
B	X 11116	H.v.R.	3-24-'93	DBM
A				

ACAD FILE NO. :

TITLE WEAR BUSHING
HGG-ELEVATOR

SIZE C | DRAWING NO. 200070(–) | SHEET 1 OF 1

REDRAWN / REPLACED BY:

REPLACES: C-200070(–) REV.A DATED:7-20-'92

ITEM	QTY	PART NUMBER	DESCRIPTION
1	1	7829-1	LATCH SPRING TYPE SJL/SPL ELEVATOR
2	1	50008-06-C8D	SCREW,CAP-HEX HD (UNC 1/2")
3	1	50808-R-C	WASHER, FLAT 1/2" REGULAR
4	1	53201	GREASE FITTING, STRAIGHT
5	2	53301-10-6	SCREW, DRIVE 0.179 DIA X 3/8
~~6~~	~~2~~	~~979459-475~~	~~SHACKLE, GREEN PIN 'POLAR', 4.75 S.W.L G 5163~~
7	1	10137236-001	HINGE PIN (4-13,3/8 ELEV.)
8	1	10137244-001	LOCK BAR 1/4 x 2 3/16
9	1	10139703-001	LATCH RETAINING PIN SJL/SPL
10	1	10140060-001	INFO & READ MANUAL PLATE
11	1	10146446-001	SAFETY LATCH ASSEMBLY
12	1	10148047-001	LATCH PIN TYPE SJL & SPL ELEVATOR
13	1	10708894-001 △	SJL-Elevator Door Mach., 2.3/8"-5.1/2", 5 sTon
14	1	10708896-001 △	SJL-Elevator Body Mach., 2.3/8"-5.1/2", 5 sTon
15	1	10785548-001	LOCK PIN SJL ELEVATOR
16	1	59000507	GREASE CAP

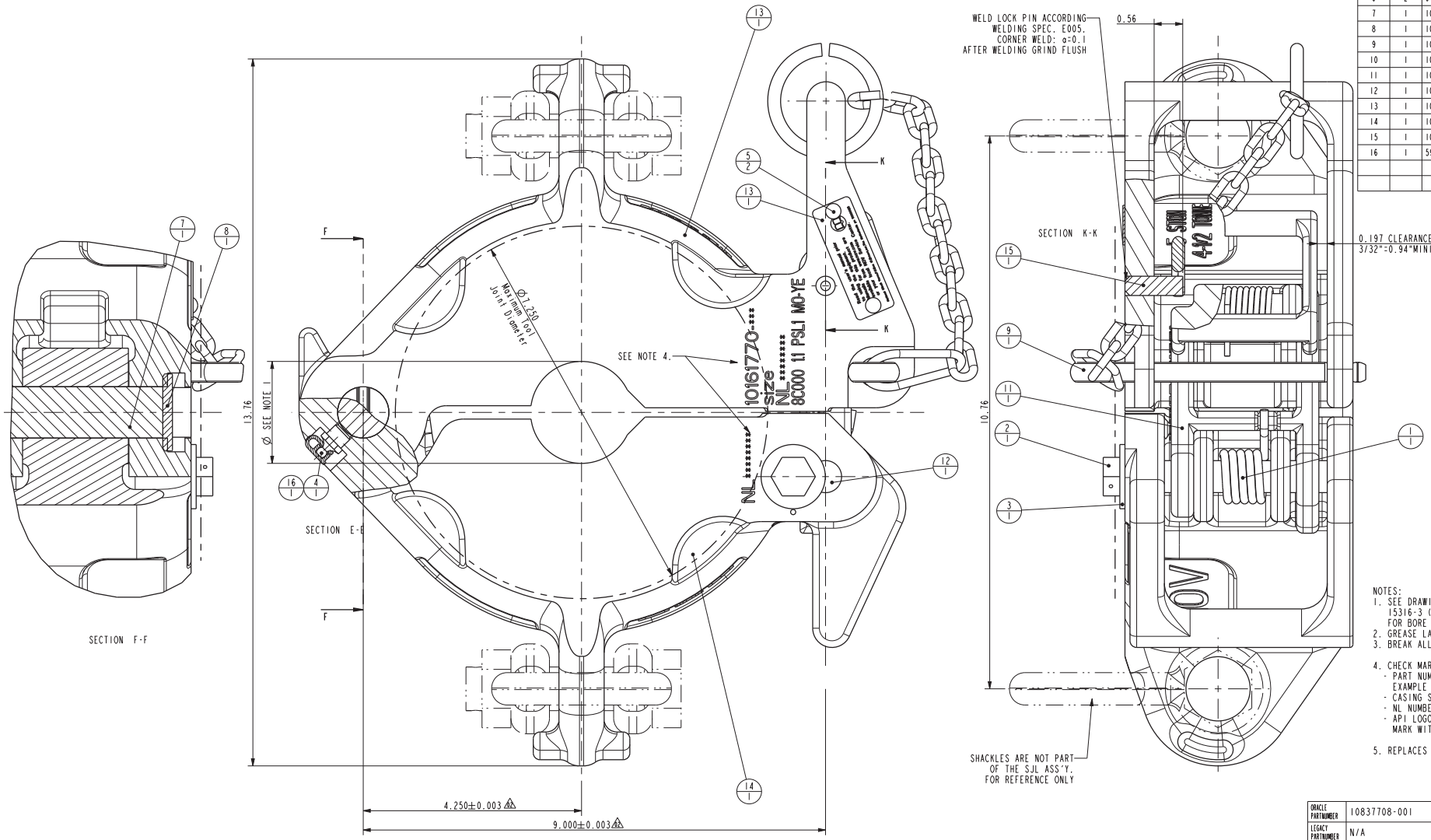

NOTES:
1. SEE DRAWING 15316-1 (DRILL PIPE) / 15316-2 (CASING) / 15316-3 (TUBING) / 15316-6 (ZIP DC) / 15316-8 (DC LIFT PLUG) FOR BORE DIAMETER
2. GREASE LATCH AND LATCH LOCK PIN AT ASSEMBLY.
3. BREAK ALL SHARP EDGES.

4. CHECK MARKING ON SJL ELEVATOR:
   - PART NUMBER: (ORACLE PARTNUMBER)
     EXAMPLE : 10161770-012 (was 70500Y132)
   - CASING SIZE : 5-1/2"
   - NL NUMBER
   - API LOGO & LICENCE NUMBER with MONTH AND YEAR PRODUCED: MARK WITH 0.25" [6mm] HIGH LOW STRESS CHARACTERS

5. REPLACES DRAWING 70499 & 70500.

ORACLE PARTNUMBER	10837708-001		
LEGACY PARTNUMBER	N/A	REFERENCE ONLY	
MATERIAL			
SURF. FINISH / PAINTSPEC.	P-001	COLOR	RED
WEIGHT	66.9 Lbs	30.3 kg	
CREATED BY	Sonneveld, Leon	REVISION	
CREATED ON	04-Oct-13 08:56:10 AM		
REVISED BY	Sonneveld, Leon		
REVISED ON	07-Oct-13 03:31:26 PM	02	
TC - ECR	00018728	ASM	

UNLESS OTHERWISE SPECIFIED
TOLERANCES (PER ANSI Y 14.5)
3 PLACE DECIMAL .XXX ± .010
2 PLACE DECIMAL .XX ± .03
1 PLACE DECIMAL .X ± .1
ANGLES ± .5 DEGREE
BREAK SHARP CORNERS .010 ± .005
MACHINED SURFACES 125
TORCHCUT SURFACES 1000
ALL WELD SYMBOLS ACC. TO ISO
ALL WELD DIMENSIONS ARE 2 DIM'S

DO NOT SCALE DOCUMENT
THIS DOCUMENT IS NOV TEAMCENTER CONTROLLED

NATIONAL OILWELL VARCO

SCALE 1:1 | PROJ. | UNITS INCH (mm)

TITLE △ Assy SJL-Elevator, 2.3/8"-5.1/2", 5sTon

SIZE D | DRAWING NO. 10708899-ASM | SHEET 1 OF 1

ITEM	QTY	PART NUMBER	DESCRIPTION
1	1	10708896	SJL-Elevator Body Mach., 2.3/8"-5.1/2", 5 sTon
2	1	10708894	SJL-Elevator Door Mach., 2.3/8"-5.1/2", 5 sTon
3	1	10137236	HINGE PIN (4-13.3/8 ELEV.)
4	1	10137244-001	LOCK BAR 1/4 x 2 3/16
5	1	10146446	SAFETY LATCH ASSEMBLY
6	1	10148047	LATCH PIN TYPE SJL & SPL ELEVATOR
7	1	10146849-001	LATCH SPRING TYPE SJL/SPL ELEVATOR
8	1	11030728-001	Latch Retaining Pin Ass'y SPL Elevator
9	1	11056836-001	LOCK PIN SJL
10	1	50806-R-C	WASHER, FLAT
11	1	50006-04-C8D	SCREW,CAP-HEX HD (UNC 3/8")
12	1	53201	FITTING, GREASE, STRAIGHT
13	1	59000507	GREASE CAP
14	2	53301-10-6	SCREW, DRIVE 0.179 DIA X 3/8
15	1	10140060-001	INFO & READ MANUAL PLATE

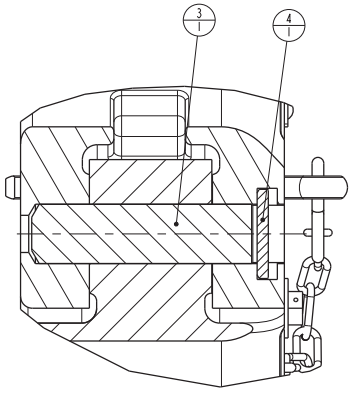

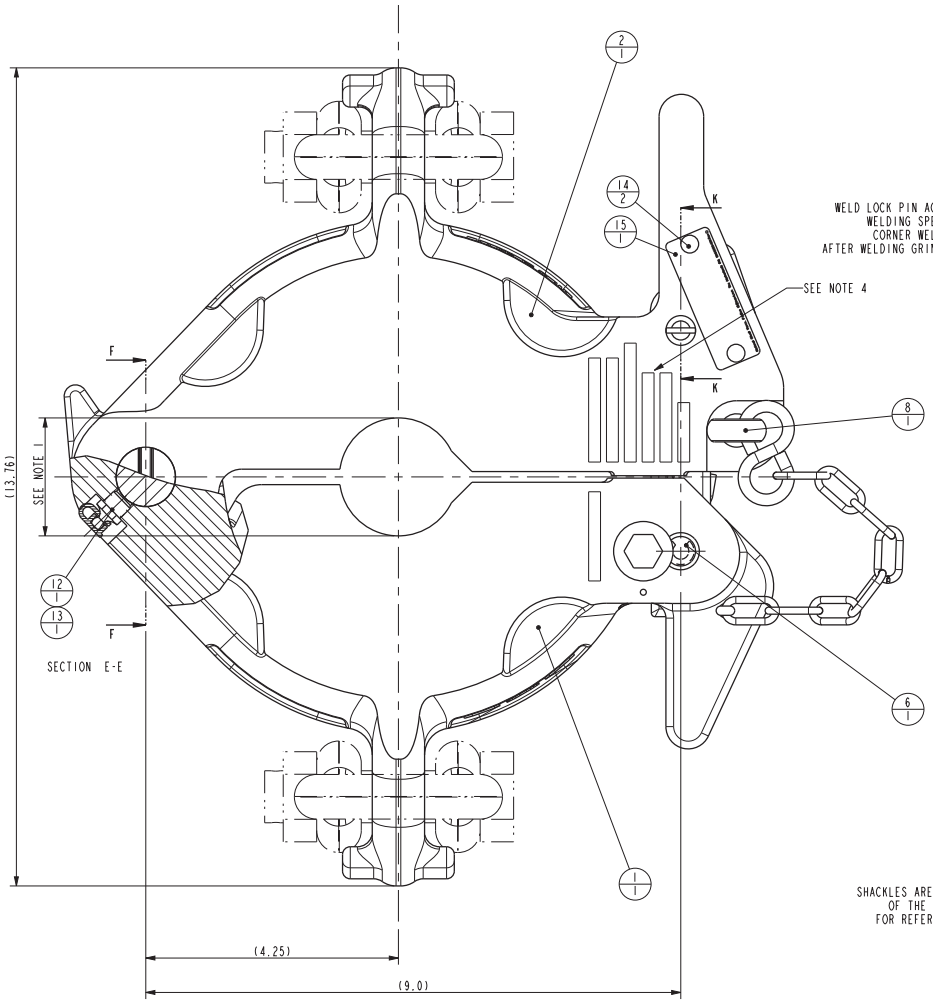

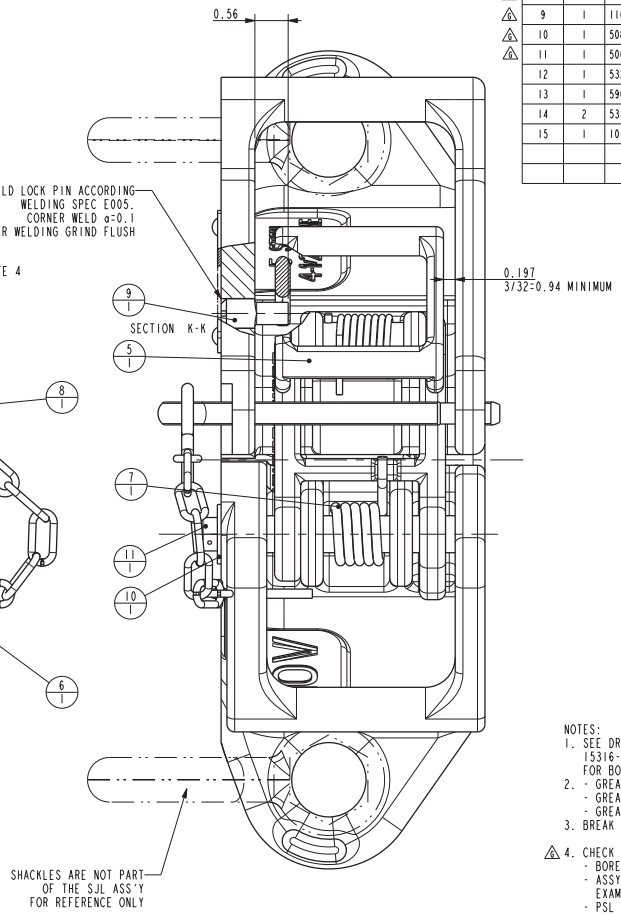

NOTES:
1. SEE DRAWING 15316-1 (DRILL PIPE) / 15316-2 (CASING) / 15316-3 (TUBING) / 15316-6 (ZIP DC) / 15316-8 (DC LIFT PLUG) FOR BORE DIAMETER
2. - GREASE LATCH AND LATCH LOCK PIN AT ASSEMBLY.
   - GREASE HINGE PIN AT ASSEMBLY.
   - GREASE BODY HINGE VIA GREASE NIPPLE.
3. BREAK ALL SHARP EDGES.
4. CHECK MARKING ON SJL ELEVATOR:
   - BORE SIZE
   - ASSY ORACLE PARTNUMBER
     EXAMPLE : 10146447-017
   - PSL 1 OR 2, API LICENSE NUMBER
     EXAMPLE "PSL1 8C000 1.1"
   - NL NUMBER (WORKORDER)
   - CE + MONTH + YEAR
   - "SJL"

ORACLE PARTNUMBER	10146447		
LEGACY PARTNUMBER	70499....		REFERENCE ONLY
MATERIAL			
SURF. FINISH / PAINTSPEC.	P-001	COLOR	RED
WEIGHT	67.1 Lbs	30.4 kg	
CREATED BY	Rene Hommes		REVISION
CREATED ON	18-Aug-14 04:46:04 AM		
REVISED BY	Rene Hommes		G
REVISED ON	17-Oct-14 05:16:18 AM		
TC - ECR	00026938	ASM	

UNLESS OTHERWISE SPECIFIED
TOLERANCES (PER ANSI Y 14.5)
3 PLACE DECIMAL .XXX ± .010
2 PLACE DECIMAL .XX ± .03
1 PLACE DECIMAL .X ± .1
ANGLES ± .5 DEGREE
BREAK SHARP CORNERS .010 ± .005
MACHINED SURFACES 125
TORCHCUT SURFACES 1000
ALL WELD SYMBOLS ACC. TO ISO
ALL WELD DIMENSIONS ARE 2 DIM'S

DO NOT SCALE DOCUMENT
THIS DOCUMENT IS NOV TEAMCENTER CONTROLLED

NATIONAL OILWELL VARCO

SCALE 9:10
UNITS INCH (mm)
PROJ.

TITLE: SJL elevator ass'y 2.3/8" - 3.1/2"
SIZE: D
DRAWING NO.: 70499
SHEET 1 OF 1

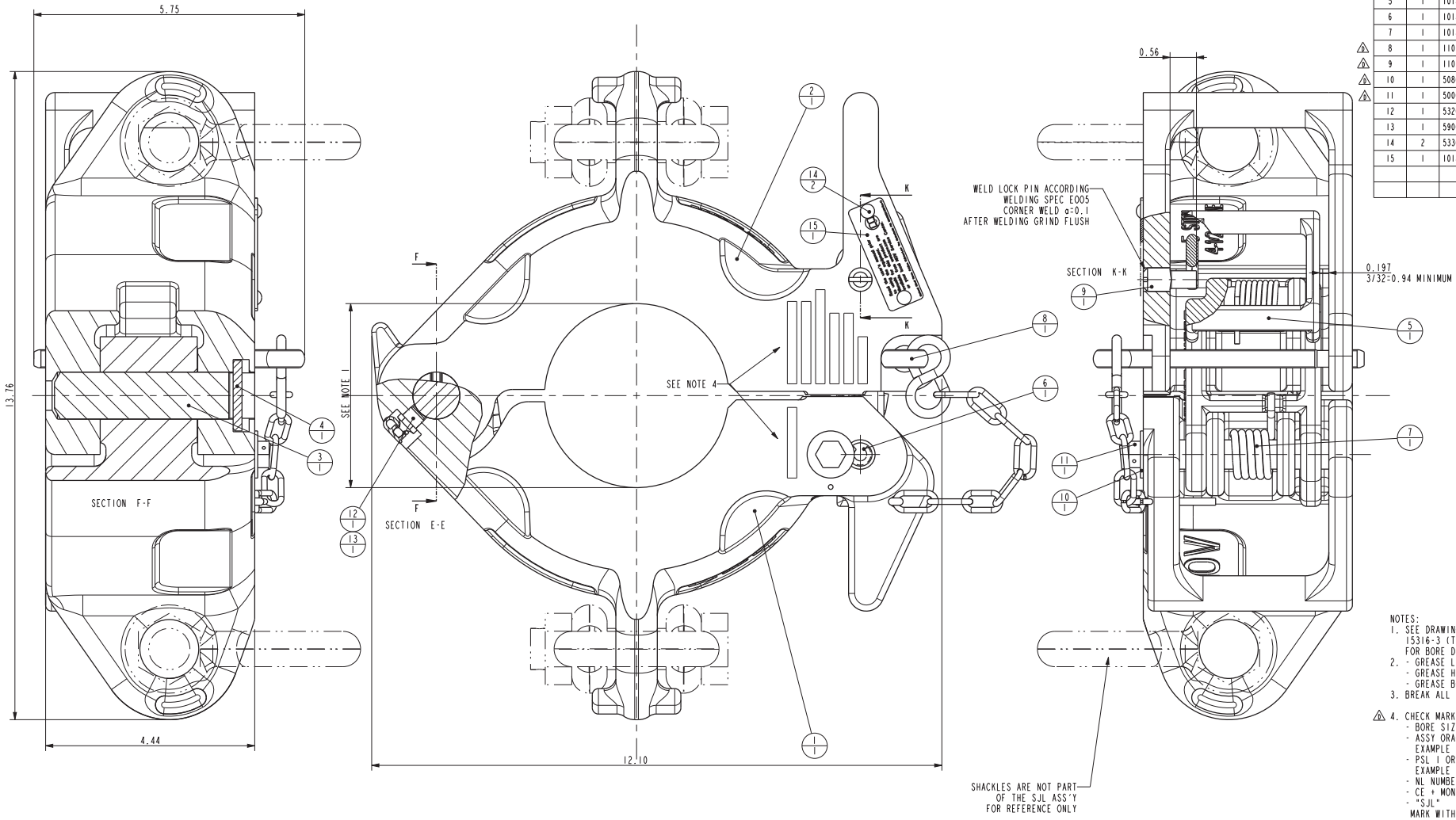

ITEM	QTY	PART NUMBER	DESCRIPTION
1	1	10708896	SJL-Elevator Body Mach., 2.3/8"-5.1/2", 5 sTon
2	1	10708894	SJL-Elevator Door Mach., 2.3/8"-5.1/2", 5 sTon
3	1	10137236	HINGE PIN (4-13.3/8 ELEV.)
4	1	10137244-001	LOCK BAR 1/4 x 2 3/16
5	1	10146446	SAFETY LATCH ASSEMBLY
6	1	10148047	LATCH PIN TYPE SJL & SPL ELEVATOR
7	1	10146849-001	LATCH SPRING TYPE SJL/SPL ELEVATOR
8	1	11030728-001	Latch Retaining Pin Ass'y SPL Elevator
9	1	11056836-001	LOCK PIN SJL
10	1	50806-R-C	WASHER, FLAT
11	1	50006-04-C8D	SCREW,CAP-HEX HD (UNC 3/8")
12	1	53201	FITTING, GREASE, STRAIGHT
13	1	59000507	GREASE CAP
14	2	53301-10-6	SCREW, DRIVE 0.179 DIA X 3/8
15	1	10140060-001	INFO & READ MANUAL PLATE

NOTES:
1. SEE DRAWING 15316-1/15316-4 (DRILL PIPE) / 15316-2 (CASING) / 15316-3 (TUBING) / 15316-6 (ZIP DC) / 15316-8 (DC LIFT PLUG) FOR BORE DIAMETER
2. - GREASE LATCH AND LATCH LOCK PIN AT ASSEMBLY.
   - GREASE HINGE PIN AT ASSEMBLY.
   - GREASE BODY HINGE VIA GREASE NIPPLE.
3. BREAK ALL SHARP EDGES.
4. CHECK MARKING ON SJL ELEVATOR:
   - BORE SIZE
   - ASSY ORACLE PARTNUMBER
     EXAMPLE : 10161770-004
   - PSL 1 OR 2, API LICENSE NUMBER
     EXAMPLE "PSL1 8C000 1.1"
   - NL NUMBER (WORKORDER)
   - CE + MONTH + YEAR
   - "SJL"
   MARK WITH 0.2" [5mm] HIGH LOW STRESS CHARACTERS

ORACLE PARTNUMBER	10161770		
LEGACY PARTNUMBER	70500Y	REFERENCE ONLY	
MATERIAL			
SURF. FINISH / PAINTSPEC.	P-001	COLOR	RED
WEIGHT	64.3 Lbs	29.1 kg	
CREATED BY	Rene Hommes	REVISION	D
CREATED ON	20-Aug-14 06:11:34 AM		
REVISED BY	Rene Hommes		
REVISED ON	17-Oct-14 05:16:18 AM		
TC - ECR	00026938	DAD	

UNLESS OTHERWISE SPECIFIED
TOLERANCES (PER ANSI Y 14.5)
3 PLACE DECIMAL .XXX ± .010
2 PLACE DECIMAL .XX ± .03
1 PLACE DECIMAL .X ± .1
ANGLES ± .5 DEGREE
BREAK SHARP CORNERS .010 ± .005
MACHINED SURFACES 250
TORCHCUT SURFACES 1000
ALL WELD SYMBOLS ACC. TO ISO
ALL WELD DIMENSIONS ARE 2 DIM'S

NATIONAL OILWELL VARCO

DO NOT SCALE DOCUMENT
THIS DOCUMENT IS NOV TEAMCENTER CONTROLLED
SCALE 9:10
PROJ.
UNITS INCH (mm)

TITLE
Assy SJL-Elevator, 3.3/4"-5.1/2", 5 sTon

SIZE D | DRAWING NO. 70500 | SHEET 1 OF 1

ITEM	QTY	PART NUMBER	DESCRIPTION
1	1	10706890	SJL-Elevator Body Mach., 5.5/8"-7.3/4", 5 sTon
2	1	10706885	SJL-Elevator Door Mach., 5.5/8"-7.3/4", 5 sTon
3	1	10137236	HINGE PIN (4-13.3/8 ELEV.)
4	1	10137244-001	LOCK BAR 1/4 x 2 3/16
5	1	10146446	SAFETY LATCH ASSEMBLY
6	1	10148047	LATCH PIN TYPE SJL & SPL ELEVATOR
7	1	10146849-001	LATCH SPRING TYPE SJL/SPL ELEVATOR
4 8	1	11030728-001	Latch Retaining Pin Ass'y SPL Elevator
4 9	1	11056836-001	LOCK PIN SJL
4 10	1	50806-R-C	WASHER, FLAT
4 11	1	50006-04-C8D	SCREW,CAP-HEX HD (UNC 3/8")
12	1	53201	FITTING, GREASE, STRAIGHT
13	1	59000507	GREASE CAP
14	2	53301-4-5	SCREW, DRIVE 0.114 DIA X 5/16
15	1	10140060-001	INFO & READ MANUAL PLATE

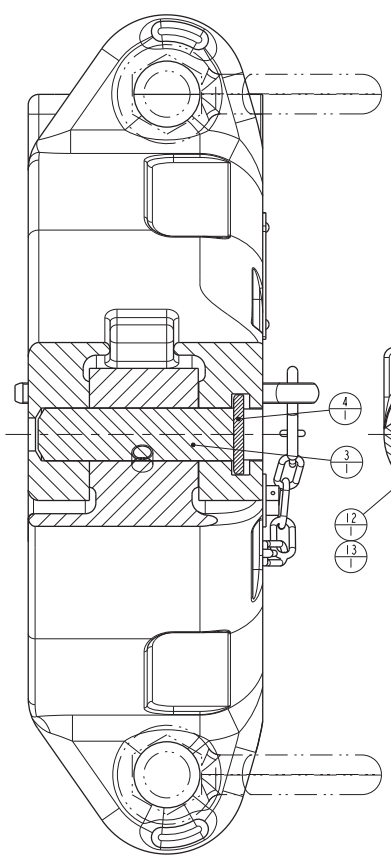

SECTION F-F

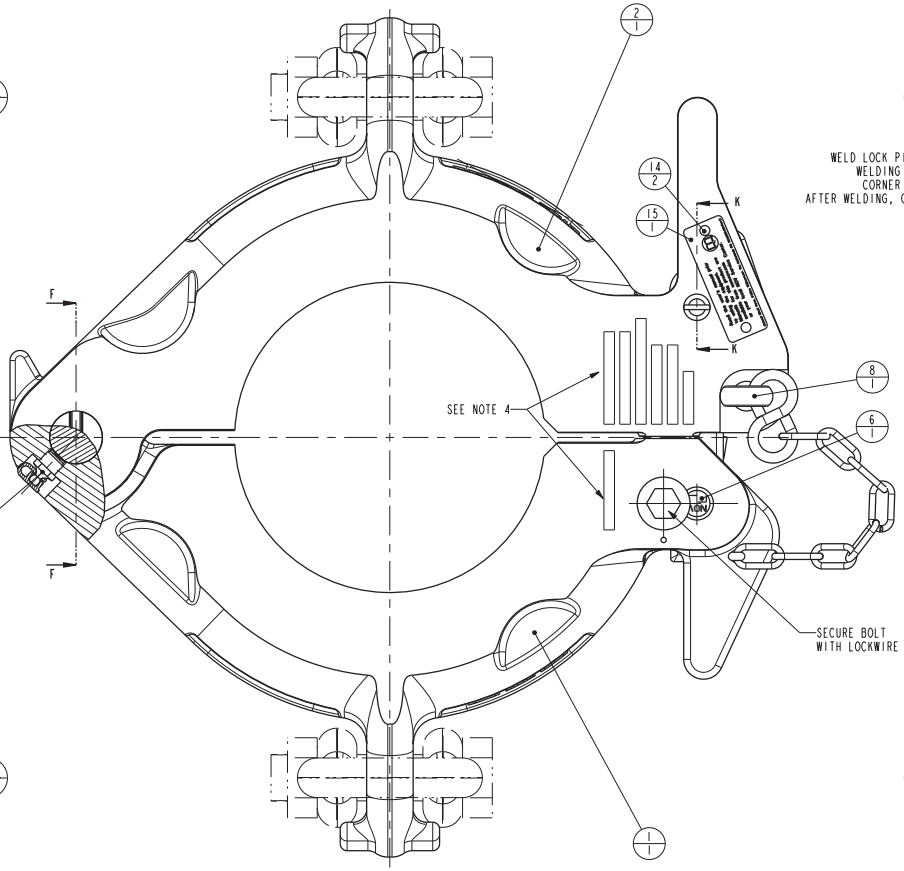

SECTION E-E

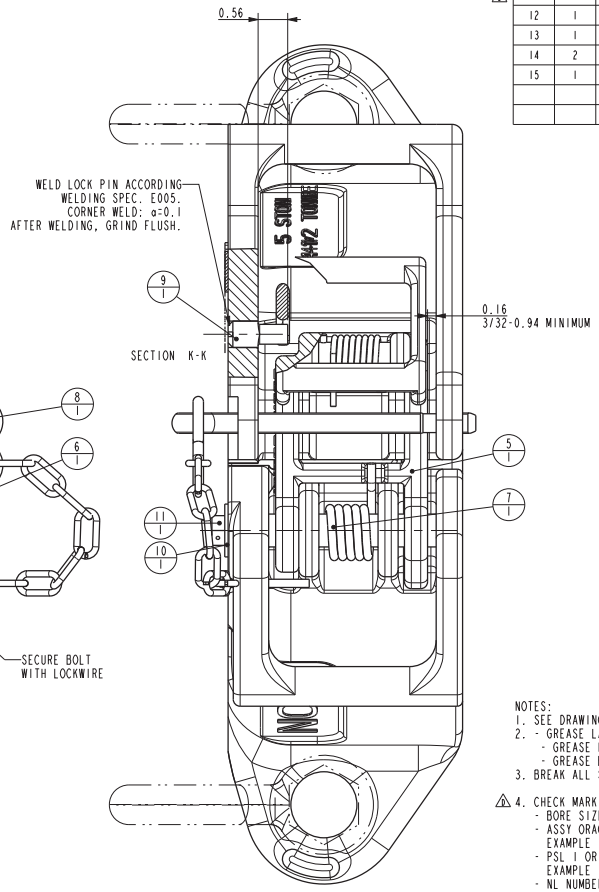

SHACKLES ARE NOT PART
OF THE SJL ASS'Y.
FOR REFERENCE ONLY.

NOTES:
1. SEE DRAWING 15316-2 (CASING) OR 15316-6 (DC zip) FOR BORE DIAMETER
2. - GREASE LATCH AND LATCH LOCK PIN AT ASSEMBLY.
   - GREASE HINGE PIN AT ASSEMBLY.
   - GREASE BODY HINGE VIA GREASE NIPPLE.
3. BREAK ALL SHARP EDGES.
4. CHECK MARKING ON SJL ELEVATOR:
   - BORE SIZE
   - ASSY ORACLE PARTNUMBER
     EXAMPLE : 10722134-028
   - PSL 1 OR 2, API LICENSE NUMBER
     EXAMPLE "PSL1 8C000 1.1"
   - NL NUMBER (WORKORDER)
   - CE + MONTH + YEAR
   - "SJL"

ORACLE PARTNUMBER	10722134		
LEGACY PARTNUMBER	70501	REFERENCE ONLY	
MATERIAL			
SURF. FINISH / PAINTSPEC.	P-001	COLOR	RED
WEIGHT	81.2 Lbs	36.8 kg	
CREATED BY	Rene Hommes	REVISION	D
CREATED ON	21-Aug-14 11:36:07 PM		
REVISED BY	Rene Hommes		
REVISED ON	17-Oct-14 05:16:18 AM		
TC - ECR	00026938	DAD	

UNLESS OTHERWISE SPECIFIED
TOLERANCES (PER ANSI Y 14.5)
3 PLACE DECIMAL .XXX ± .010
2 PLACE DECIMAL .XX ± .03
1 PLACE DECIMAL .X ± .1
ANGLES ± .5° DEGREE
BREAK SHARP CORNERS .010 ± .005
MACHINED SURFACES 125
TORCHCUT SURFACES 1000
ALL WELD SYMBOLS ACC. TO ISO
ALL WELD DIMENSIONS ARE 2 DIM'S

NOV
NATIONAL OILWELL VARCO

DO NOT SCALE DOCUMENT
THIS DOCUMENT IS NOV TEAMCENTER CONTROLLED
SCALE 4:5
UNITS INCH (mm)
PROJ.

TITLE
SJL ELEVATER ASS'Y 6"-7-5/8" 5T.

SIZE D | DRAWING NO. 70501 | SHEET 1 OF 1

ITEM	QTY	PART NUMBER	DESCRIPTION
1	1	10705993	SJL-Elevator Body Mach., 7.7/8"-11", 5 sTon
2	1	10705991	SJL-Elevator Door Mach., 8.1/8"-11", 5 sTon
3	1	10137236	HINGE PIN (4-13.3/8 ELEV.)
4	1	10137244-001	LOCK BAR 1/4 x 2 3/16
5	1	10146446	SAFETY LATCH ASSEMBLY
6	1	10148047	LATCH PIN TYPE SJL & SPL ELEVATOR
7	1	10146849-001	LATCH SPRING TYPE SJL/SPL ELEVATOR
8	1	11030728-001	Latch Retaining Pin Ass'y SPL Elevator
9	1	11056836-001	LOCK PIN SJL
10	1	50806-R-C	WASHER, FLAT
11	1	50006-04-C8D	SCREW,CAP-HEX HD (UNC 3/8")
12	1	53201	FITTING, GREASE, STRAIGHT
13	1	59000507	GREASE CAP
14	2	53301-4-5	SCREW, DRIVE 0.114 DIA X 5/16
15	1	10140060-001	INFO & READ MANUAL PLATE

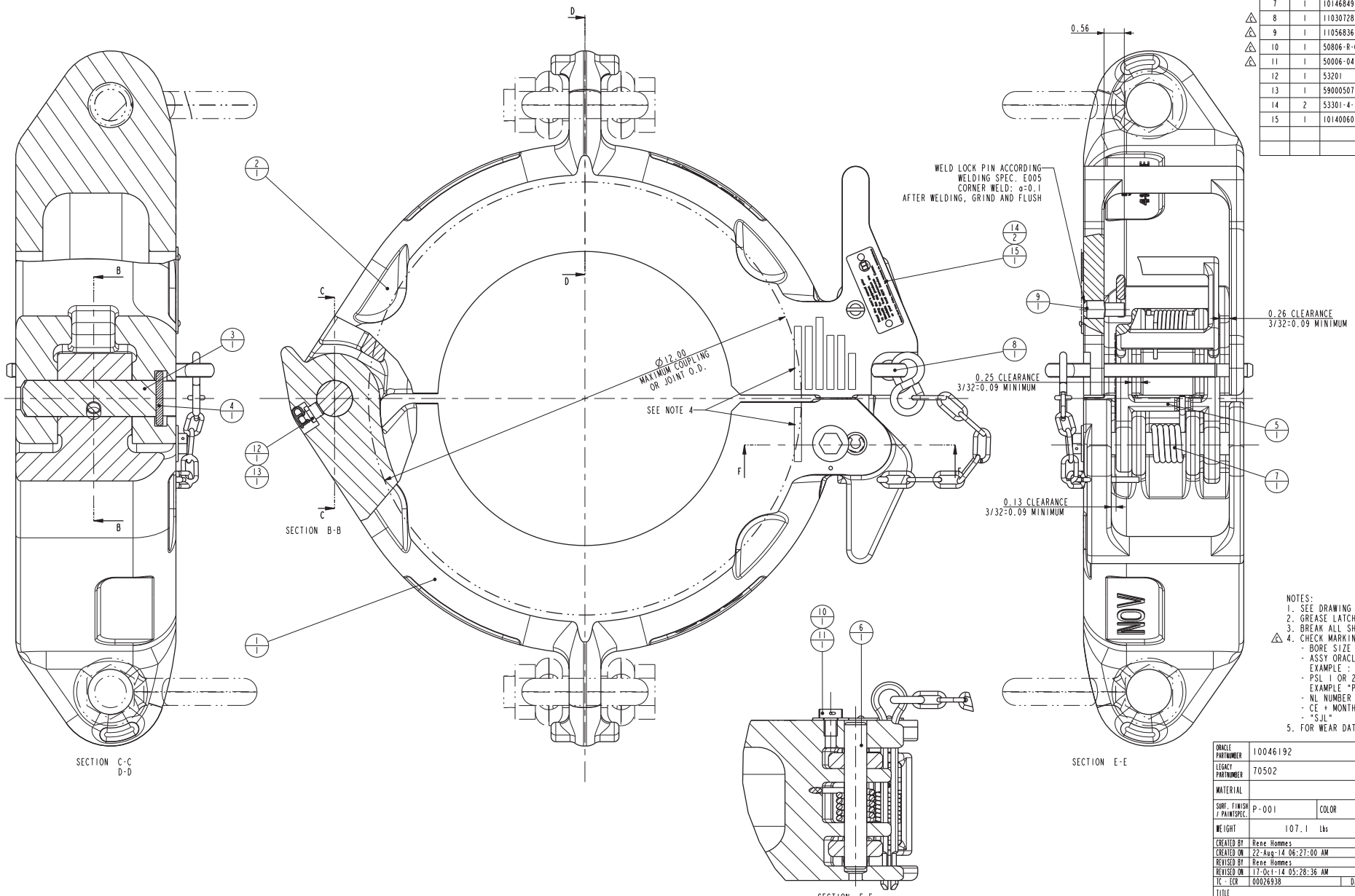

NOTES:
1. SEE DRAWING 15316-2 (CASING) FOR BORE DIAMETER.
2. GREASE LATCH AND LATCH LOCK PIN AT ASSEMBLY.
3. BREAK ALL SHARP EDGES.
4. CHECK MARKING ON SJL ELEVATOR:
   - BORE SIZE
   - ASSY ORACLE PARTNUMBER
     EXAMPLE : 10046192-***
   - PSL 1 OR 2, API LICENSE NUMBER
     EXAMPLE "PSL1 8C000 1.1"
   - NL NUMBER (WORKORDER)
   - CE + MONTH + YEAR
   - "SJL"
5. FOR WEAR DATA INFORMATION SEE DRAWING: 10900385-INF

ORACLE PARTNUMBER	10046192		
LEGACY PARTNUMBER	70502	REFERENCE ONLY	
MATERIAL			
SURF. FINISH / PAINTSPEC.	P-001	COLOR	RED
WEIGHT	107.1 Lbs	48.6 kg	
CREATED BY	Rene Hommes	REVISION	
CREATED ON	22-Aug-14 06:27:00 AM		
REVISED BY	Rene Hommes		
REVISED ON	17-Oct-14 05:28:36 AM		
TC - ECR	00026938	DAD	C

UNLESS OTHERWISE SPECIFIED
TOLERANCES (PER ANSI Y 14.5)
3 PLACE DECIMAL .XXX ± .010
2 PLACE DECIMAL .XX ± .03
1 PLACE DECIMAL .X ± .1
ANGLES ± .5° DEGREE
BREAK SHARP CORNERS .010 ± .005
MACHINED SURFACES 125
TORCHCUT SURFACES 1000
ALL WELD SYMBOLS ACC. TO ISO
ALL WELD DIMENSIONS ARE 2 DIM'S

DO NOT SCALE DOCUMENT
THIS DOCUMENT IS NOV TEAMCENTER CONTROLLED

NATIONAL OILWELL VARCO

SCALE 3:4 | PROJ.
UNITS INCH (mm)

TITLE
SJL ELEVATER ASS'Y 7-7/8"-11" 5T.

SIZE D | DRAWING NO. 70502 | SHEET 1 OF 1

ITEM	QTY	PART NUMBER	DESCRIPTION
1	1	33035	LATCH PIN TYPE SJL & SPL ELEVATOR
2	1	34439	LATCH RETAINING PIN SJL/SPL
3	1	50008-06-C8D	SCREW,CAP-HEX HD (UNC 1/2")
4	1	50808-R-C	WASHER, FLAT 1/2" REGULAR
5	1	53201	GREASE FITTING, STRAIGHT
6	2	53301-10-6	SCREW, DRIVE 0.179 DIA X 3/8
7	1	70497	SAFETY LATCH ASSEMBLY
8	1	200050	HINGE PIN (4" - 13-3/8" ELEV.)
9	1	200052	LOCK BAR 1/4 x 2 3/16
10	2	979459-475	SHACKLE, GREEN PIN 'POLAR', 4.75 S.W.L G-5163
11	1	10706885-001	SJL-Elevator Door Mach., 5.3/4"-7.3/4", 5 sTon
12	1	10706890-001	SJL-Elevator Body Mach.,5.3/4"-7.3/4", 5 sTon
13	1	50000126	INFO & READ MANUAL PLATE

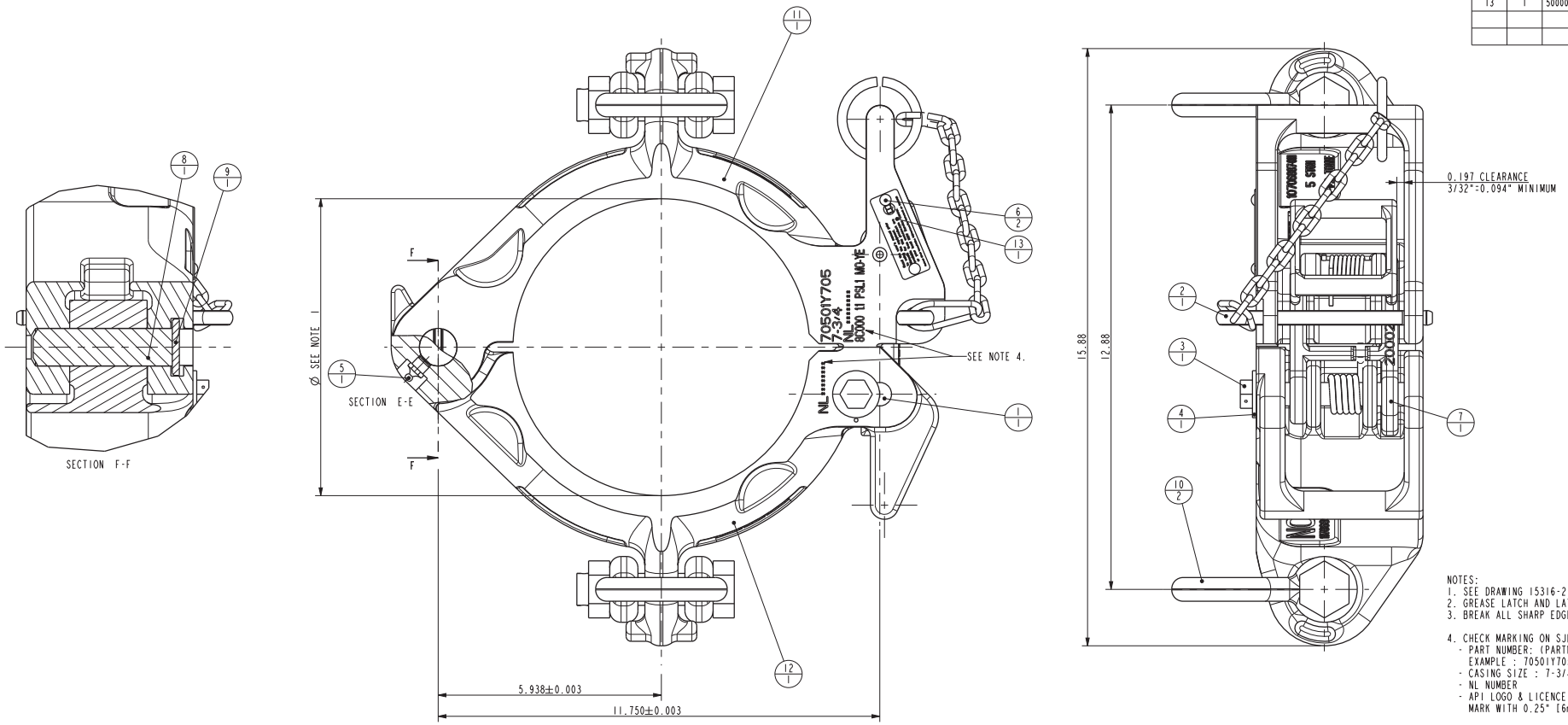

NOTES:
1. SEE DRAWING 15316-2 (CASING) OR 15316-6 (DC zip) FOR BORE DIAMETER
2. GREASE LATCH AND LATCH LOCK PIN AT ASSEMBLY.
3. BREAK ALL SHARP EDGES.

4. CHECK MARKING ON SJL ELEVATOR:
   - PART NUMBER: (PARTNUMBER + BORECODE)
     EXAMPLE : 70501Y705
   - CASING SIZE : 7-3/4"
   - NL NUMBER
   - API LOGO & LICENCE NUMBER with MONTH AND YEAR PRODUCED:
     MARK WITH 0.25" [6mm] HIGH LOW STRESS CHARACTERS

5. REPLACES DRAWING 70501.

PARTNUMBER	70501Y....		
MATERIAL			
SURF. FINISH / PAINTSPEC.	-		
COLOR	-		
WEIGHT	71.4 Lbs	32.4 kg	
CREATED BY	Sonneveld, Leon	REVISION	01
CREATED ON	06-Dec-12 04:22:36 PM		
REVISED BY	Sonneveld, Leon		
REVISED ON	25-Mar-13 02:34:03 PM		
TC - ECR	00011664	ASM	

UNLESS OTHERWISE SPECIFIED
TOLERANCES (PER ANSI Y 14.5)
3 PLACE DECIMAL .XXX ± .010
2 PLACE DECIMAL .XX ± .03
1 PLACE DECIMAL .X ± .1
ANGLES ± .5 DEGREE
BREAK SHARP CORNERS .010 ± .005
MACHINED SURFACES 125
TORCHCUT SURFACES 1000
ALL WELD SYMBOLS ACC. TO ISO
ALL WELD DIMENSIONS ARE Z DIM'S

DO NOT SCALE DOCUMENT
THIS DOCUMENT IS NOV TEAMCENTER CONTROLLED

NATIONAL OILWELL VARCO

SCALE 2:3 | PROJ. | UNITS INCH (mm)

TITLE: Assy SJL-Elevator, 5.3/4"-7.3/4", 5sTon

SIZE: D | DRAWING NO. 10706896-ASM | SHEET 1 OF 1

ITEM	QTY	PART NUMBER	DESCRIPTION
1	1	33035	LATCH PIN TYPE SJL & SPL ELEVATOR
2	1	34439	LATCH RETAINING PIN SJL/SPL
3	1	50008-06-C8D	SCREW,CAP-HEX HD (UNC 1/2")
4	1	50808-R-C	WASHER, FLAT 1/2" REGULAR
5	1	53201	GREASE FITTING, STRAIGHT
6	2	53301-10-6	SCREW, DRIVE 0.179 DIA X 3/8
7	1	70497	SAFETY LATCH ASSEMBLY
8	1	200050	HINGE PIN (4" - 13-3/8" ELEV.)
9	1	200052	LOCK BAR 1/4 x 2 3/16
10	2	979459-475	SHACKLE, GREEN PIN 'POLAR', 4.75 S.W.L G-5163
11	1	10705991-001	SJL-Elevator Door Mach., 8.1/8"-11", 5 sTon
12	1	10705993-001	SJL-Elevator Body Mach., 8.1/8"-11", 5 sTon
13	1	50000126	INFO & READ MANUAL PLATE

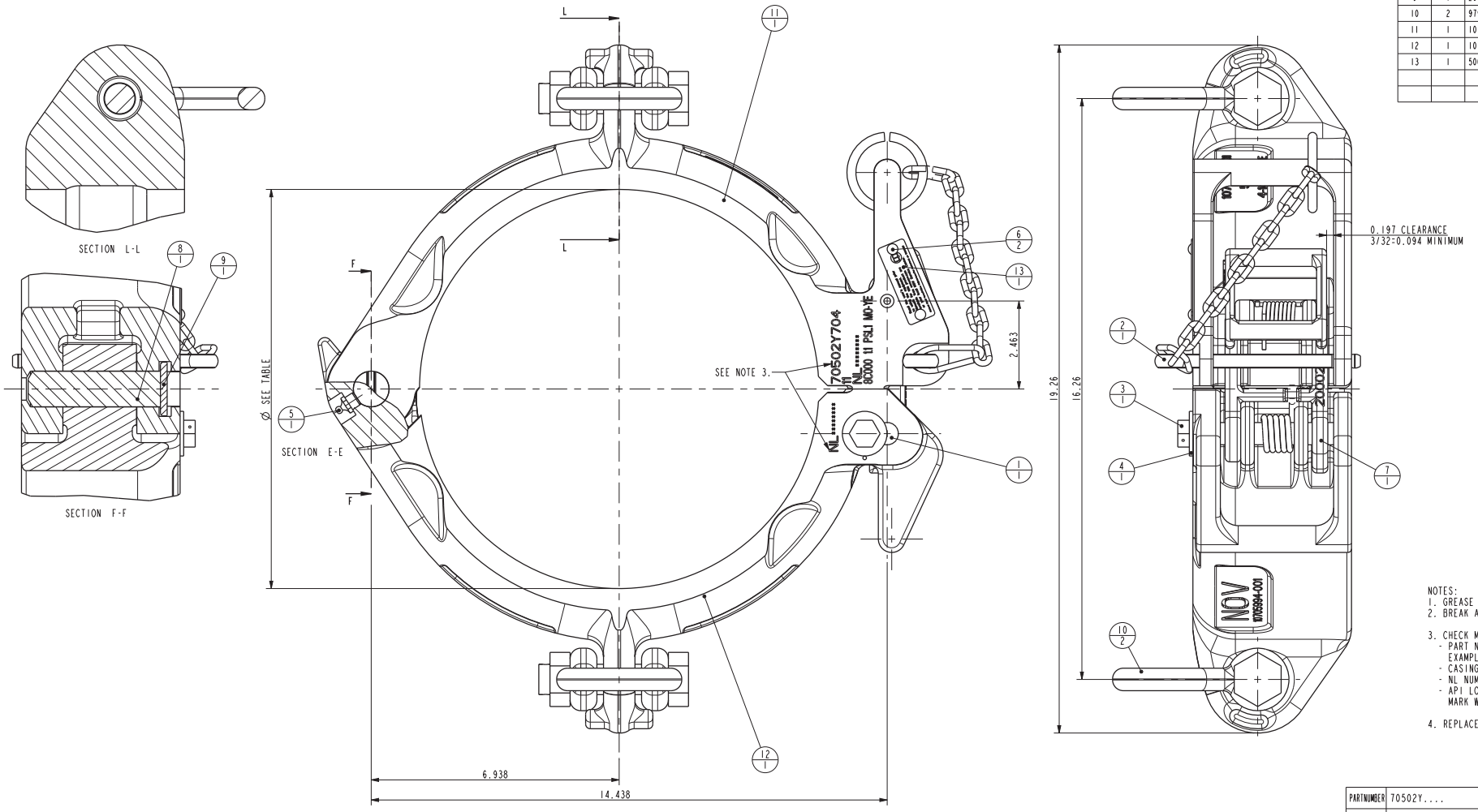

NOTES:
1. GREASE LATCH AND LATCH LOCK PIN AT ASSEMBLY.
2. BREAK ALL SHARP EDGES.

3. CHECK MARKING ON SJL ELEVATOR:
- PART NUMBER: (PARTNUMBER + BORECODE)
  EXAMPLE : 70502Y704
- CASING SIZE : 11
- NL NUMBER
- API LOGO & LICENCE NUMBER with MONTH AND YEAR PRODUCED:
  MARK WITH 0.25" [6mm] HIGH LOW STRESS CHARACTERS

4. REPLACES DRAWING 70502.

PARTNUMBER	70502Y....
MATERIAL	
SURF. FINISH / PAINTSPEC.	-
COLOR	-
WEIGHT	87.1 Lbs 39.5 kg
CREATED BY	Sonneveld, Leon
CREATED ON	03-Dec-12 10:36:45 AM
REVISED BY	Sonneveld, Leon
REVISED ON	13-Mar-13 01:47:50 PM
TC - ECR	00011459 DAD
REVISION	01

UNLESS OTHERWISE SPECIFIED
TOLERANCES (PER ANSI Y 14.5)
3 PLACE DECIMAL .XXX ± .010
2 PLACE DECIMAL .XX ± .03
1 PLACE DECIMAL .X ± .1
ANGLES ± .5 DEGREE
BREAK SHARP CORNERS .010 ± .005
MACHINED SURFACES 125
TORCHCUT SURFACES 1000
ALL WELD SYMBOLS ACC. TO ISO
ALL WELD DIMENSIONS ARE 2 DIM'S

DO NOT SCALE DOCUMENT
THIS DOCUMENT IS NOV TEAMCENTER CONTROLLED

NATIONAL OILWELL VARCO

SCALE 2:3
UNITS INCH (mm)
PROJ.

TITLE
Assy SJL-Elevator, 8"-11", 5 sTon

SIZE D
DRAWING NO. 10705995-DAD
SHEET 1 OF 1

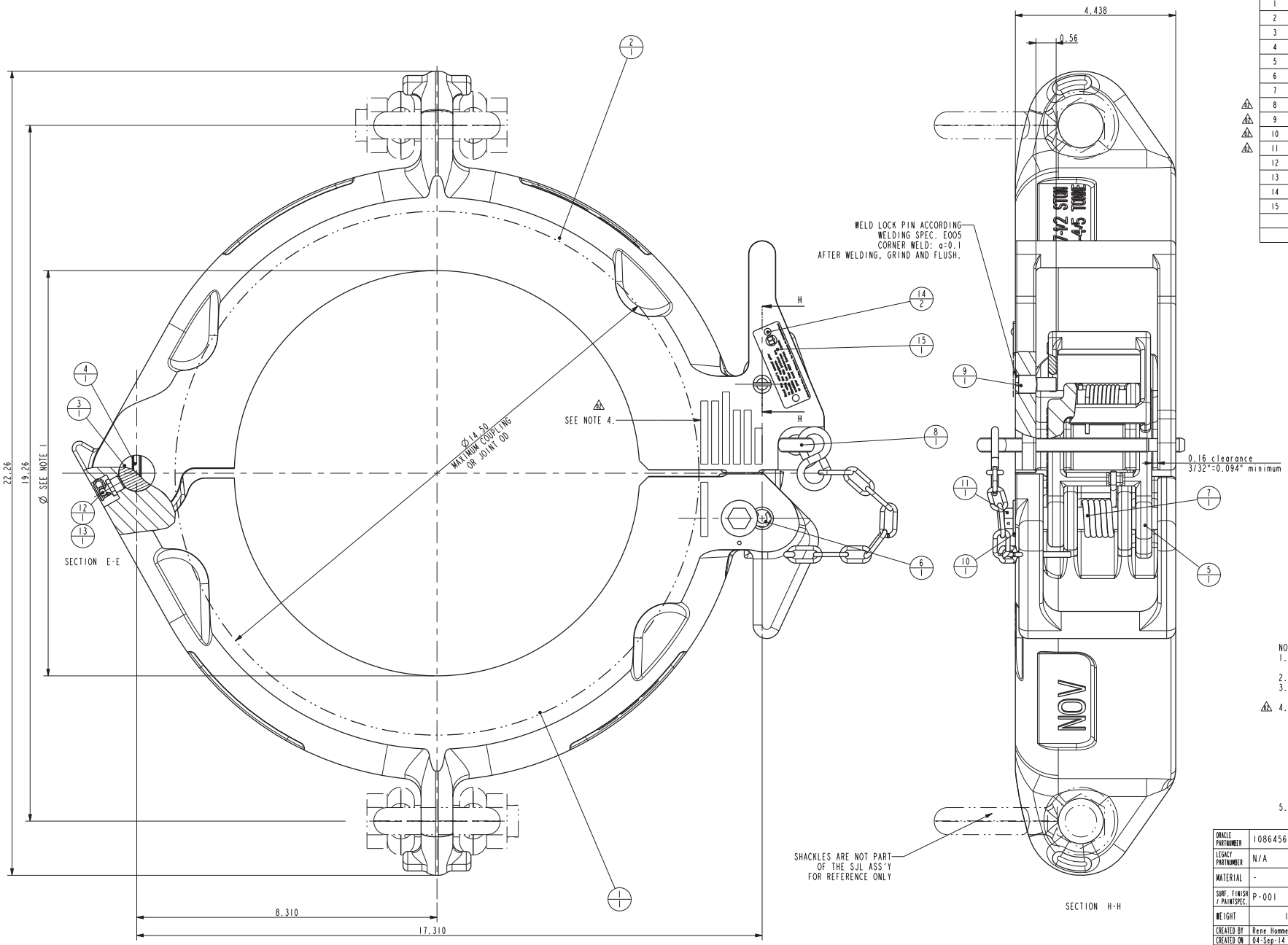

ITEM	QTY	PART NUMBER	DESCRIPTION
1	1	10864613	SJL ELEV. BODY MACH. 11.1/8"-14", 7.5 STON
2	1	10864569	SJL ELEV. DOOR MACH. 11.1/8-14", 7.5 STON
3	1	10137236	HINGE PIN (4-13.3/8 ELEV.)
4	1	10137244-001	LOCK BAR 1/4 x 2 3/16
5	1	10146446	SAFETY LATCH ASSEMBLY
6	1	10148047	LATCH PIN TYPE SJL & SPL ELEVATOR
7	1	10146849-001	LATCH SPRING TYPE SJL/SPL ELEVATOR
4 8	1	11030728-001	Latch Retaining Pin Ass'y SPL Elevator
4 9	1	11056836-001	LOCK PIN SJL
4 10	1	50806-R-C	WASHER, FLAT
4 11	1	50006-06-C8D	SCREW,CAP-HEX HD (UNC 3/8")
12	1	53201	FITTING, GREASE, STRAIGHT
13	1	59000507	GREASE CAP
14	2	53301-4-5	SCREW, DRIVE 0.114 DIA X 5/16
15	1	10140060-001	INFO & READ MANUAL PLATE

NOTES:
1. SEE DRAWING 15316-2 OR 15316-6, OR GENERAL BORE CODE LIST FOR BORE DIAMTER
2. GREASE LATCH AND LATCH LOCK PIN AT ASSEMBLY.
3. BREAK ALL SHARP EDGES.
4. CHECK MARKING SJL ELEVATOR:
   - BORE SIZE
   - ASSY ORACLE PARTNUMBER
     EXAMPLE : 10864561-001
   - PSL 1 OR 2, API LICENSE NUMBER
     EXAMPLE "PSL1 8C000 1.1"
   - NL NUMBER (WORKORDER)
   - CE + MONTH + YEAR
   - "SJL"
5. REPLACES DRAWING 70503 AND SJL 70503Y/Z***

ORACLE PARTNUMBER	10864561-001		
LEGACY PARTNUMBER	N/A	REFERENCE ONLY	
MATERIAL	-		
SURF. FINISH / PAINTSPEC.	P-001	COLOR	RED
WEIGHT	131.2 Lbs	59.5 kg	
CREATED BY	Rene Hommes	REVISION	
CREATED ON	04-Sep-14 01:20:05 AM		
REVISED BY	Rene Hommes		
REVISED ON	27-Oct-14 04:23:50 AM	02	
TC - ECR	00026938	DAD	

UNLESS OTHERWISE SPECIFIED
TOLERANCES (PER ANSI Y 14.5)
3 PLACE DECIMAL .XXX ± .010
2 PLACE DECIMAL .XX ± .03
1 PLACE DECIMAL .X ± .1
ANGLES ± .5 DEGREE
BREAK SHARP CORNERS .010 ± .005
MACHINED SURFACES 125
TORCHCUT SURFACES 1000
ALL WELD SYMBOLS ACC. TO ISO
ALL WELD DIMENSIONS ARE 2 DIM'S

NATIONAL OILWELL VARCO

DO NOT SCALE DOCUMENT
THIS DOCUMENT IS NOV TEAMCENTER CONTROLLED
SCALE 3:4
PROJ.
UNITS INCH (mm)

TITLE
SJL ELEVATOR ASS'Y 11-1/8"-14", 7.5 STON

SIZE D | DRAWING NO. 10864561-ASM | SHEET 1 OF 1

ITEM	QTY	PART NUMBER	DESCRIPTION
1	1	10704239	SJL-Elevator Body Mach., 14.1/8"-20.1/2",7.5sTon
2	1	10704236	SJL-Elevator Door Mach., 14.1/8"-20.1/2",7.5sTon
3	1	10137240	HINGE PIN (16" - 24" ELEV.)
4	1	10144697-001	LOCK BAR - HINGE PIN TYPE SJL ELEV. 16" - 24"
5	1	10146446	SAFETY LATCH ASSEMBLY
6	1	10148047	LATCH PIN TYPE SJL & SPL ELEVATOR
7	1	10146849-001	LATCH SPRING TYPE SJL/SPL ELEVATOR
3 8	1	11030728-001	Latch Retaining Pin Ass'y SPL Elevator
3 9	1	11056836-001	LOCK PIN SJL
3 10	1	50806-R-C	WASHER, FLAT
3 11	1	50006-06-C8D	SCREW,CAP-HEX HD (UNC 3/8")
12	1	53201	FITTING, GREASE, STRAIGHT
13	1	59000507	GREASE CAP
14	2	53301-4-5	SCREW, DRIVE 0.114 DIA X 5/16
15	1	10140060-001	INFO & READ MANUAL PLATE

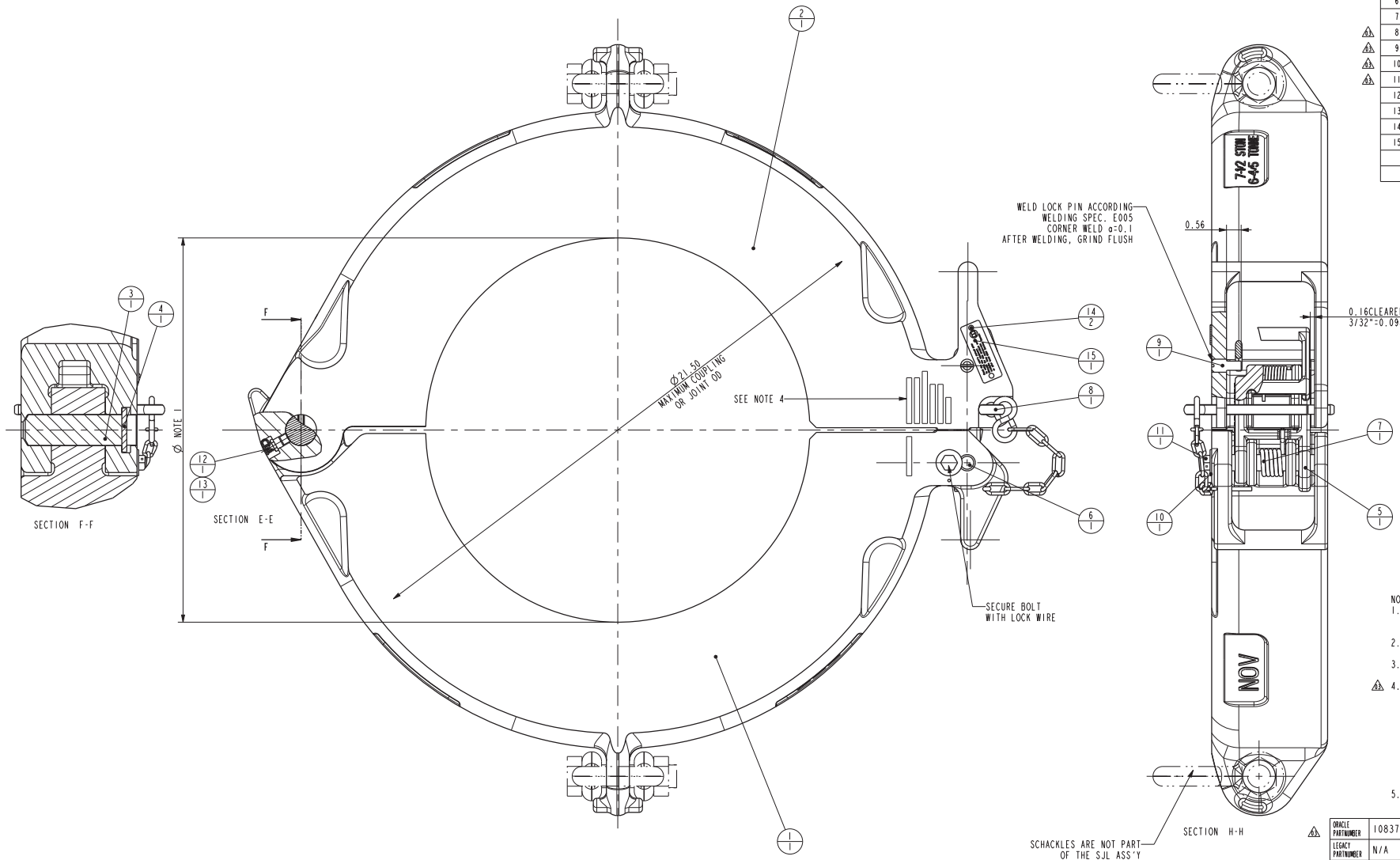

NOTES:

1. SEE DRAWING 15316-2 (CASING) 15316-6 (DC zip) FOR BORE DIAMETER. OR GENERAL BORE CODE LIST.
2. GREASE LATCH AND LATCH LOCK PIN AT ASSEMBLY.
3. BREAK ALL SHARP EDGES.
4. CHECK MARKING ON SJL ELEVATOR:
   - BORE SIZE
   - ASSY ORACLE PARTNUMBER
     EXAMPLE : 10864561-001
   - PSL 1 OR 2, API LICENSE NUMBER
     EXAMPLE "PSL1 8C000 1.1"
   - NL NUMBER (WORKORDER)
   - CE + MONTH + YEAR
   - "SJL"
5. REPLACES DRAWING 70504 AND PART NUMBERS 70504Y/Z***

ORACLE PARTNUMBER	10837790		
LEGACY PARTNUMBER	N/A	REFERENCE ONLY	
MATERIAL			
SURF. FINISH / PAINTSPEC.	P-001	COLOR	RED
WEIGHT	265.5 Lbs	120.4 kg	
CREATED BY	Rene Hommes	REVISION	
CREATED ON	04-Sep-14 05:54:03 AM		
REVISED BY	Rene Hommes		
REVISED ON	17-Oct-14 04:50:57 AM	03	
TC - ECR	00026938	ASM	

UNLESS OTHERWISE SPECIFIED
TOLERANCES (PER ANSI Y 14.5)
3 PLACE DECIMAL .XXX ± .010
2 PLACE DECIMAL .XX ± .03
1 PLACE DECIMAL .X ± .1
ANGLES ± .5° DEGREE
BREAK SHARP CORNERS .010 ± .005
MACHINED SURFACES 125
TORCHCUT SURFACES 1000
ALL WELD SYMBOLS ACC. TO ISO
ALL WELD DIMENSIONS ARE Z DIM'S

DO NOT SCALE DOCUMENT
THIS DOCUMENT IS NOV TEAMCENTER CONTROLLED

NATIONAL OILWELL VARCO

SCALE 1:2 | PROJ.
UNITS INCH (mm)

TITLE: Assy SJL-Elevator, 14.1/8"-20.1/2",7.5sTon
SIZE: D | DRAWING NO. 10704240-ASM | SHEET 1 OF 1

	ITEM	QTY	PART NUMBER	DESCRIPTION
3	1	1	10872083	SJL-Elevator Body Mach., 20.5/8-24.1/2", 7.5sTon
4	2	1	10872069	SJL-Elevator Door Mach., 14.1/8"-20.1/2",7.5sTon
	3	1	10137240	HINGE PIN (16" - 24" ELEV.)
	4	1	10144697-001	LOCK BAR - HINGE PIN TYPE SJL ELEV. 16" - 24"
	5	1	10146446	SAFETY LATCH ASSEMBLY
	6	1	10148047	LATCH PIN TYPE SJL & SPL ELEVATOR
3	7	1	10146849-001	LATCH SPRING TYPE SJL/SPL ELEVATOR
	8	1	11024797-001	Latch Retaining Pin Ass'y SJL Elevator
3	9	1	11056836-001	LOCK PIN SJL
3	10	1	50806-R-C	WASHER, FLAT
3	11	1	50006-08-C8D	SCREW,CAP-HEX HD (UNC 3/8")
	12	1	53201	FITTING, GREASE, STRAIGHT
	13	1	59000507	GREASE CAP
	14	2	53301-4-5	SCREW, DRIVE 0.114 DIA X 5/16
3	15	1	10140060-001	INFO & READ MANUAL PLATE

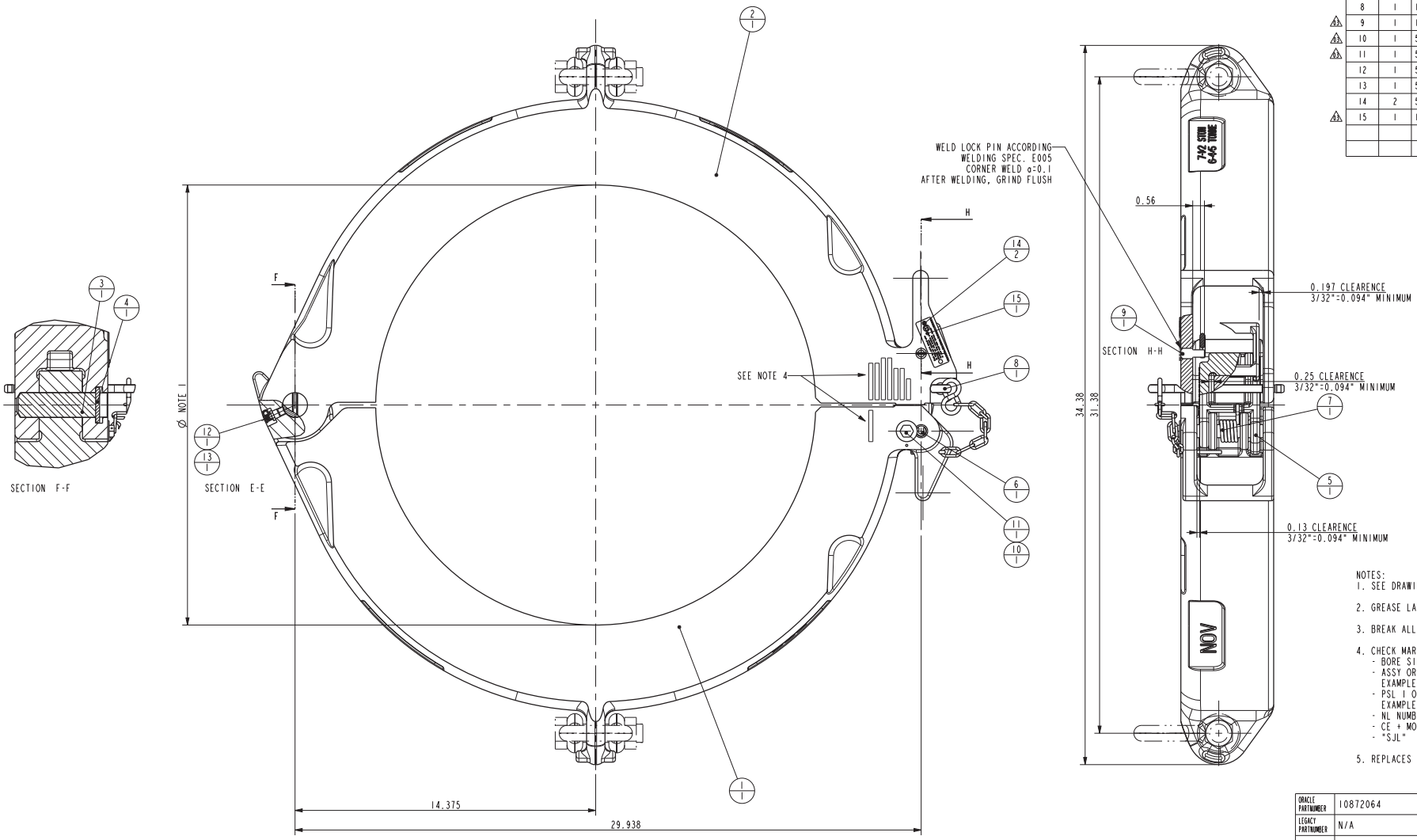

NOTES:

1. SEE DRAWING 15316-2 (CASING) FOR BORE DIAMETER.
2. GREASE LATCH AND LATCH LOCK PIN AT ASSEMBLY.
3. BREAK ALL SHARP EDGES.
4. CHECK MARKING ON SJL ELEVATOR:
   - BORE SIZE
   - ASSY ORACLE PARTNUMBER
     EXAMPLE : 10872064-***
   - PSL 1 OR 2, API LICENSE NUMBER
     EXAMPLE "PSL1 8C000 1.1"
   - NL NUMBER (WORKORDER)
   - CE + MONTH + YEAR
   - "SJL"
5. REPLACES DRAWING 70505 AND PART NUMBERS 70505Y/Z***

ORACLE PARTNUMBER	10872064		
LEGACY PARTNUMBER	N/A	REFERENCE ONLY	
MATERIAL			
SURF. FINISH / PAINTSPEC.	P-001	COLOR	RED
WEIGHT	315.9 Lbs	143.3 kg	
CREATED BY	Rene Hommes	REVISION	
CREATED ON	05-Sep-14 02:25:59 AM		
REVISED BY	Rene Hommes		
REVISED ON	17-Oct-14 04:50:57 AM	03	
TC - ECR	00026938	ASM	

UNLESS OTHERWISE SPECIFIED
TOLERANCES (PER ANSI Y 14.5)
3 PLACE DECIMAL .XXX ± .010
2 PLACE DECIMAL .XX ± .03
1 PLACE DECIMAL .X ± .1
ANGLES ± .5° DEGREE
BREAK SHARP CORNERS .010 ± .005
MACHINED SURFACES 125
TORCHCUT SURFACES 1000
ALL WELD SYMBOLS ACC. TO ISO
ALL WELD DIMENSIONS ARE Z DIM'S

DO NOT SCALE DOCUMENT
THIS DOCUMENT IS NOV TEAMCENTER CONTROLLED

NATIONAL OILWELL VARCO

SCALE 2:5 | PROJ.
UNITS INCH (mm)

TITLE: Assy SJL-Elevator, 20.5/8"-24.1/2",7.5sTon
SIZE: D | DRAWING NO. 10872064-ASM | SHEET 1 OF 1

ITEM	QTY	PART NUMBER	DESCRIPTION
1	1	50008-06-C8D	SCREW,CAP-HEX HD (UNC 1/2")
2	1	50808-R-C	WASHER, FLAT 1/2" REGULAR
3	1	53201	FITTING, GREASE, STRAIGHT
4	2	53301-4-5	SCREW, DRIVE 0.114 DIA X 5/16
5	1	10137240-001	HINGE PIN (16" - 24" ELEV.)
6	1	10140060	INFO & READ MANUAL PLATE
7	1	10144697-001	LOCK BAR - HINGE PIN TYPE SJL ELEV. 16" - 24"
8	1	10146446	SAFETY LATCH ASSEMBLY
9	1	10146849	LATCH SPRING TYPE SJL/SPL ELEVATOR
10	1	10148047-001	LATCH PIN TYPE SJL & SPL ELEVATOR
11	1	10785548-001	Latch Retaining Pin ass'y. SJL Elevator
12	1	10876018-001	SJL-Elevator Door Mach., 24.5/8-30",7.5sTon
13	1	10876025-001	SJL-Elevator Body Mach., 24.5/8-30",7.5sTon
14	1	11024797-001	Latch Retaining Pin Ass'y SJL Elevator
15	1	59000507	GREASE CAP

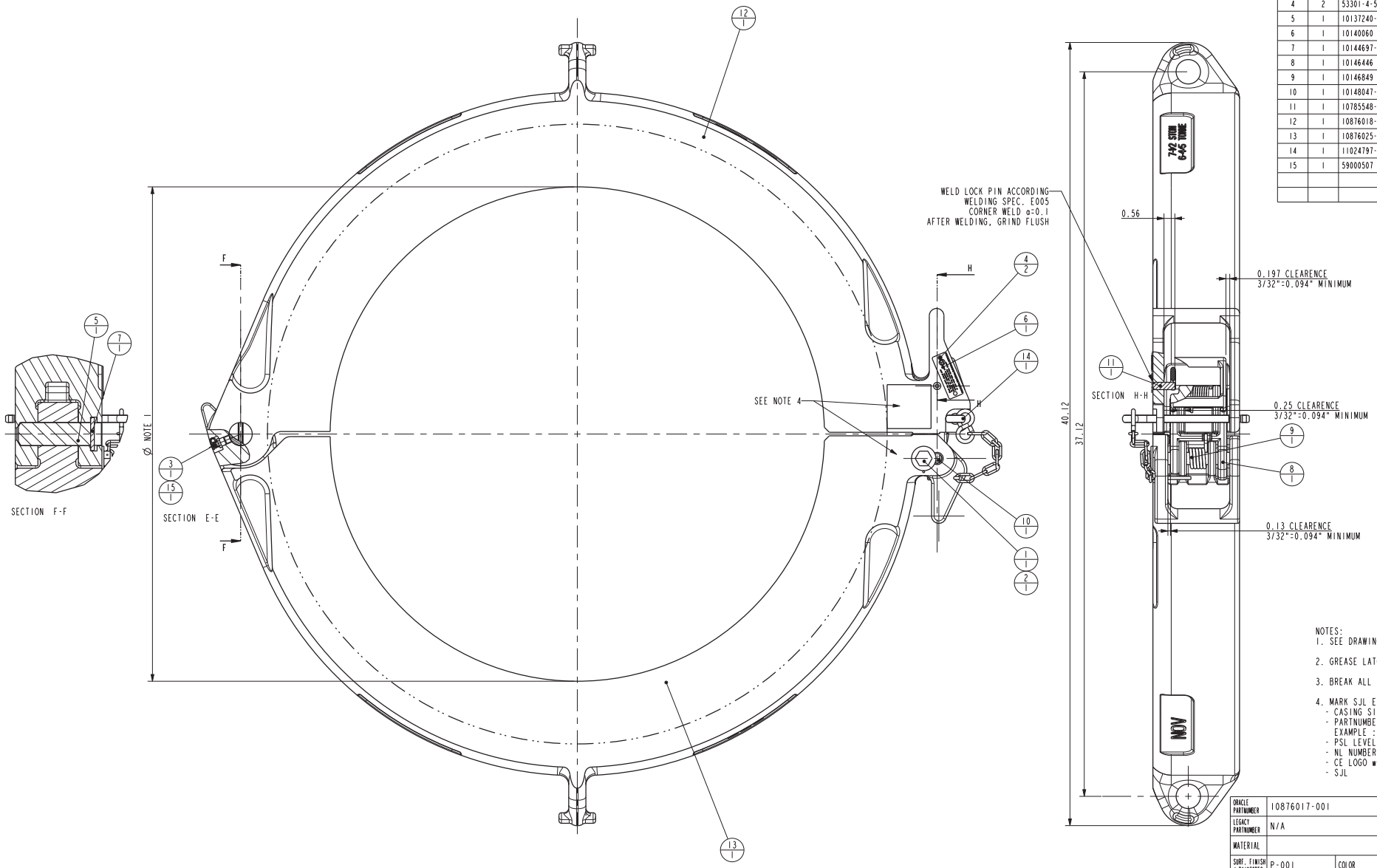

NOTES:
1. SEE DRAWING 15316-2 (CASING) FOR BORE DIAMETER.

2. GREASE LATCH AND LATCH LOCK PIN AT ASSEMBLY.

3. BREAK ALL SHARP EDGES.

4. MARK SJL ELEVATOR WITH:
- CASING SIZE : SEE TABLE
- PARTNUMBER: (ORACLE PARTNUMBER)
  EXAMPLE :10876018-*** (SEE SHOP ORDER)
- PSL LEVEL 1 OR 2, API LICENCE NUMBER
- NL NUMBER (= WORK ORDER NUMBER)
- CE LOGO with MONTH AND YEAR PRODUCED:
- SJL

ORACLE PARTNUMBER	10876017-001		
LEGACY PARTNUMBER	N/A	REFERENCE ONLY	
MATERIAL			
SURF. FINISH / PAINTSPEC.	P-001	COLOR	RED
WEIGHT	402.9 Lbs	182.8 kg	
CREATED BY	Sonneveld, Leon	REVISION	
CREATED ON	13-Nov-13 02:56:51 AM		
REVISED BY	Sonneveld, Leon		
REVISED ON	05-Aug-14 03:54:00 AM		
TC - ECR	00019653	ASM	01

UNLESS OTHERWISE SPECIFIED
TOLERANCES (PER ANSI Y 14.5)
3 PLACE DECIMAL .XXX ± .010
2 PLACE DECIMAL .XX ± .03
1 PLACE DECIMAL .X ± .1
ANGLES ± .5° DEGREE
BREAK SHARP CORNERS .010 ± .005
MACHINED SURFACES 125
TORCHCUT SURFACES 1000
ALL WELD SYMBOLS ACC. TO ISO
ALL WELD DIMENSIONS ARE Z DIM'S

DO NOT SCALE DOCUMENT
THIS DOCUMENT IS NOV TEAMCENTER CONTROLLED

NATIONAL OILWELL VARCO

SCALE 2:5
UNITS INCH (mm)
PROJ.

TITLE
Assy SJL-Elevator, 24.5/8"-30",7.5sTon

SIZE D | DRAWING NO. 10876017-ASM | SHEET 1 OF 1

TYPE	PART NO.
MDD 5–7	8069
XLD 2 3/8–3 1/2	17407

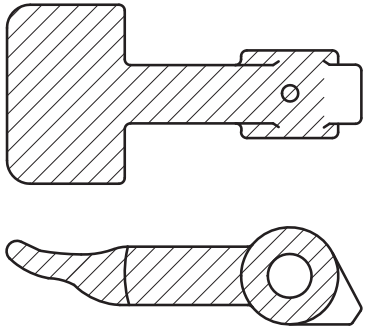

TYPE	PART NO.
GG 4–5 1/2	31071
MGG 3 1/2–5 1/2	34906
RG 2 3/8–3 1/2	23543/13151
MG 2 3/8–5	11763
HGG 4 1/2–5 1/2	30460
YT 2 1/4–2 3/4	15348
YC 2 1/4–2 3/4	15348
MYC 3 1/2–7	200363
RA 2 3/8–3 1/2	11111
MAA 5–7	11763
HYC 3 1/2–7 5/8	55503
MAA 5–7	12945
AA 3 1/2–7	11763
MAA 2 3/8–4 1/2	11763
RA 4–7	11763
SLX 24–30	11763
BX ELEV. FRAME 1	201566
BX ELEV. FRAME 2	201605

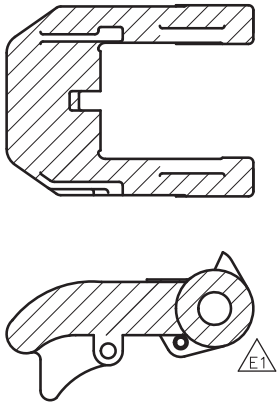

E1

TYPE	PART NO.
SLB 2 3/8–3 1/2	36947
SLB 3 1/2–4 1/2	36996
SLX 6 5/8–13 3/8	31331
SLX 16–24 1/2	33634
SLX 3 1/2–5 1/2	33813
SLX 1.660–2 7/8	33697

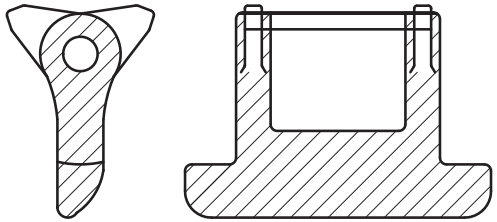

H G D1

TYPE	PART NO.
SJL/SPL	200026
SJC	73202/73203
SJ/SP	33026

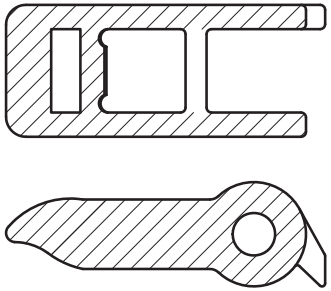

TYPE	PART NO.
SX 16	30597–2
SX 18 5/8–20	30597
SX 9 3/4–13 3/8	29945

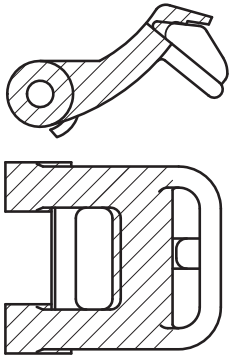

TYPE	PART NO.
MYT 1.315–2 7/8	30652
TA 1.660–4 1/2	32380
TA 1.059–2 7/8	32446
TA 5 1/2–11 1/4	32752
TA 4 3/4–11 1/4	32752–1
HYT 2 3/8–3 1/2	39162
LYT 1.05–2 1/16	30644

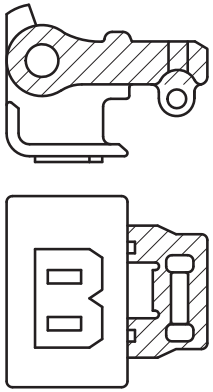

TYPE	PART NO.
SLBB 4–6 5/8	32230
SLBB 4 1/2– 5	30974

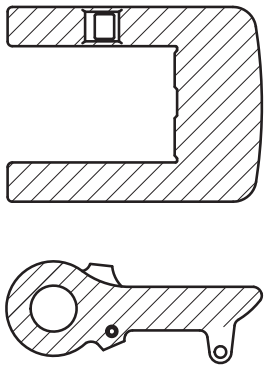

NOTES:

1. HATCHED AREAS ARE CONSIDERED CRITICAL
2. AREAS NOT HATCHED ARE CONSIDERED NON CRITICAL
3. THE ACCEPTANCE CRITERIA TO BE APPLIED ARE GIVEN IN THE VARCO BJ QUALITY ASSURANCE DOCUMENT.

F1

PART NO.	QTY.	NEXT ASS'Y	FINAL ASS'Y

Varco BJ OIL TOOLS
ETTEN-LEUR, THE NETHERLANDS

UNLESS OTHERWISE SPECIFIED
TOLERANCES (PER ANSI Y 14.5)
3 PLACE DECIMAL .XXX ± .010
2 PLACE DECIMAL .XX ± .03
1 PLACE DECIMAL .X ± .1
ANGLES ± .5 DEGREE
BREAK SHARP CORNERS .010 ± .005
MACHINED SURFACES 250

	NAME	DATE
PREPARED	M v/d M	06-29-'92
CHECKED	A.KRIJNEN	07-07-'92
APPROVED	C.QUIST	07-20-'92

PROJ.
SCALE NONE
UNITS INCH (MM)
MATERIAL
WEIGHT LBS/ KG

REV.	E.C.N.	NAME	DATE	CHECKED
M				
L				
K				
J				
H	600383	K.P.	07-03-'01	A.d.P.
G	563001	W.B.	14 Okt 98	F.S.
F	531501	ADe	10 Jan'97	H.T.
E	529301	ADe	7 nov 96	AdP
D	11055	M v/d M	08-03-'92	C.Quist
C	X 11009	M v/d M	06-29-'92	A.KRIJNEN
B	–	–	–	–
A	–	–	–	–

ACAD FILE NO. : CA201.DWG

TITLE CRITICAL AREAS ELEVATOR LATCHES

SIZE B

DRAWING NO. CA-201

SHEET 1 OF 1

REDRAWN / REPLACED BY:

REPLACES: B-CA-201 REV.B DATE:01-06-'92

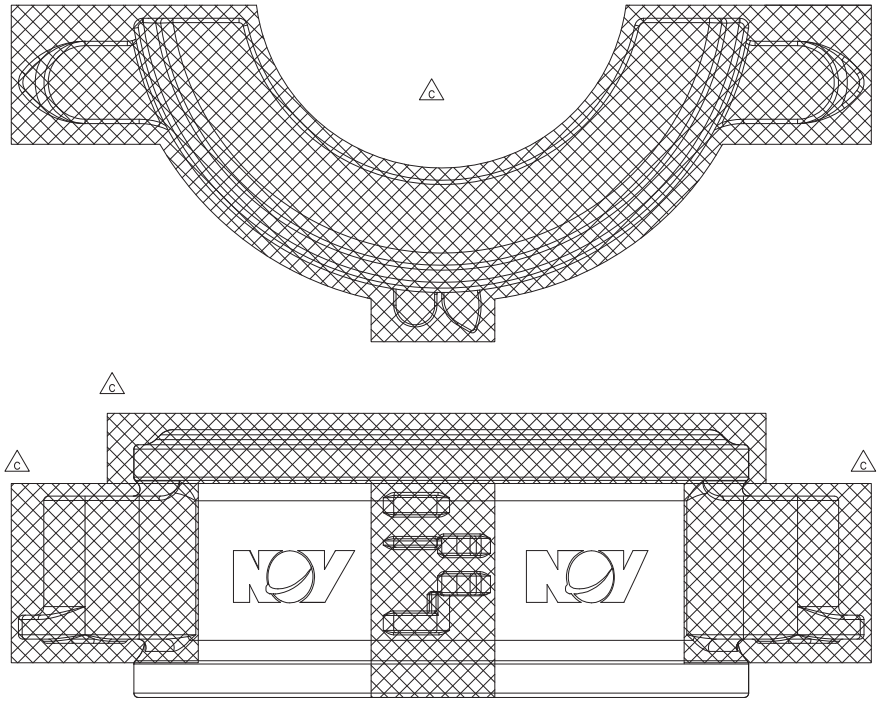

NOTES:
1. HATCHED AREAS ARE CONSIDERED CRITICAL
2. AREAS NOT HATCHED ARE CONSIDERED NON CRITICAL
3. THE ACCEPTANCE CRITERIA TO BE APPLIED ARE GIVEN IN THE VARCO BJ QUALITY ASSURANCE DOCUMENT.
4. (C) MATERIAL: CMS-01 GRADE 120-110.

PARTNUMBER	52757YC		
MATERIAL			
SURF. FINISH/ PAINT SPEC			
COLOR			
WEIGHT	LBS/	KG	
CREATED BY	Mv/d M	REV.	
CREATED ON	26 JUN 1992		
REVISED BY	L.S.		
REVISED ON	8 Oct 2012	GEN	C
TC-ECR	00009812		

UNLESS OTHERWISE SPECIFIED
TOLERANCES (PER ANSI Y 14.5)
3 PLACE DECIMAL .XXX ± .010
2 PLACE DECIMAL .XX ± .03
1 PLACE DECIMAL .X ± .1
ANGLES ± .5 DEGREE
BREAK SHARP CORNERS .010±.005
MACHINED SURFACES 250
TORCHOUT SURFACES 1000
ALL WELD SYMBOLS ACC. TO ISO
ALL WELD DIMENSIONS ARE Z DIM'S

NATIONAL OILWELL VARCO

DO NOT SCALE DOCUMENT
THIS DOCUMENT IS TEAMCENTER CONTROLLED
SCALE 1:5
UNITS INCH (MM)
PROJ.

TITLE: CA DOOR, SIDE DOOR COLLAR TYPES, CASTING
SIZE: C
DRAWING NO.: CA-229
SHEET 1 OF 1

DOOR

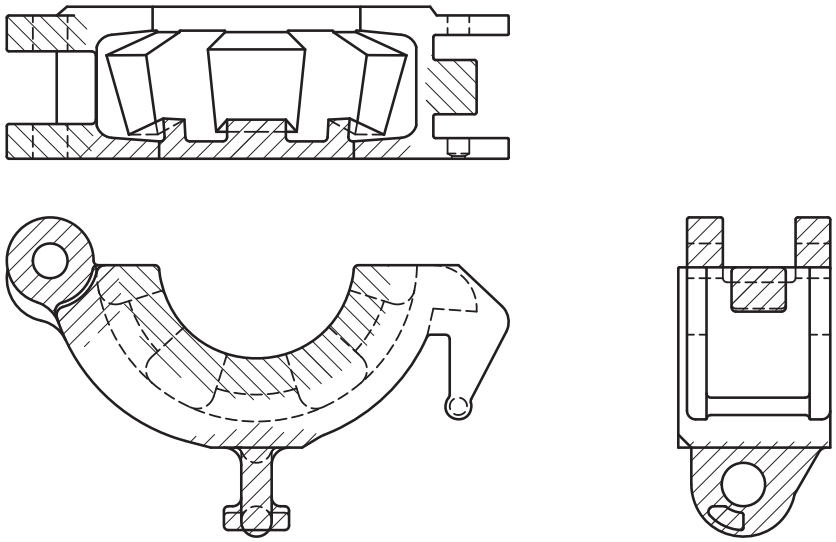

BODY

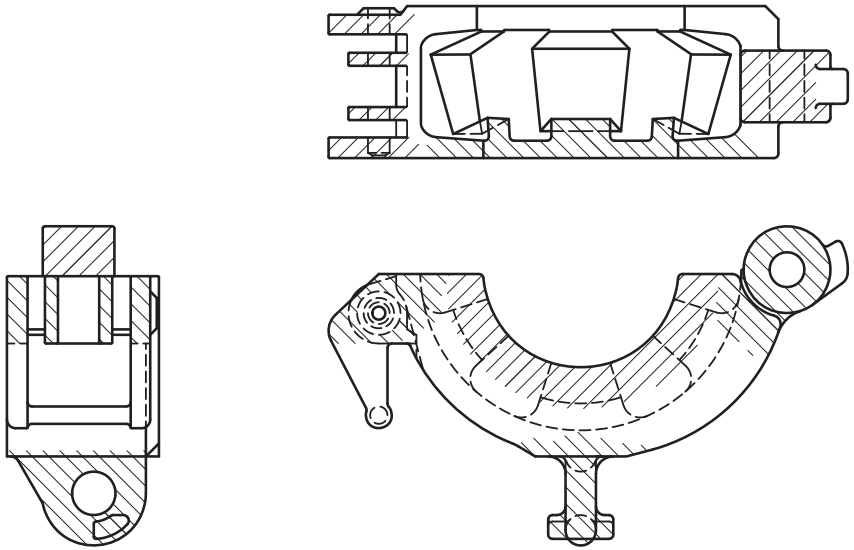

SP & SPL			
FRAME NO.	TYPE	BODY	DOOR
200008	SPL5" 2 7/8 – 5 1/2	36182	200031
200010	SPL5" 5 1/2 – 7 5/8	36386	200032
200012	SPL5" 8 5/8 – 9 5/8	36263	200033
200013	SPL5" 10 3/4	36263	200033
200014	SPL12" 2 3/8 – 4 1/2	36182	200031
200009	SPL18" 2 3/8 – 5	36182	200031
200011	SPL18" 5 1/2 – 6 5/8	36386	200032

NOTES:

1. HATCHED AREAS ARE CONSIDERED CRITICAL
2. AREAS NOT HATCHED ARE CONSIDERED NON CRITICAL
3. THE ACCEPTANCE CRITERIA TO BE APPLIED ARE GIVEN IN THE VARCO BJ QUALITY CONTROL DOCUMENT QWI 09.1

PARTNUMBER	see table
MATERIAL	
SURF. FINISH/ PAINT SPEC	—
COLOR	
WEIGHT	LBS/ KG

UNLESS OTHERWISE SPECIFIED TOLERANCES (PER ANSI Y 14.5)
3 PLACE DECIMAL .XXX ± .010
2 PLACE DECIMAL .XX ± .03
1 PLACE DECIMAL .X ± .1
ANGLES ± .5 DEGREE
BREAK SHARP CORNERS .010±.005
MACHINED SURFACES 250
TORCHCUT SURFACES 1000
ALL WELD SYMBOLS ACC. TO ISO

ORIGINAL DOCUMENT		LATEST REVISION		REV.
NAME	M v/d M	NAME	H.K	C
DATE	Jun 29, 1992	DATE	Jul 24, 2012	
DRAWING TYPE	CA	E.C.N.	EL-0703884	

DO NOT SCALE DOCUMENT

THIS DOCUMENT IS DMS CONTROLLED

NATIONAL OILWELL VARCO

SCALE NONE

UNITS INCH (MM)

PROJ.

TITLE
CRITICAL AREAS BODY/DOOR SINGLE JOINT SP/SPL ELEVATOR

SIZE B

DRAWING NO. CA-231

SHEET 1 OF 1

NOTES:
1. HATCHED AREAS ARE COSIDERED CRITICAL
2. AREAS NOT HATCHED ARE CONSIDERED NON CRITICAL
3. THE ACCEPTANCE CRITERIA TO BE APPLIED ARE GIVEN IN THE VARCO BJ QUALITY ASSURANCE DOCUMENT.

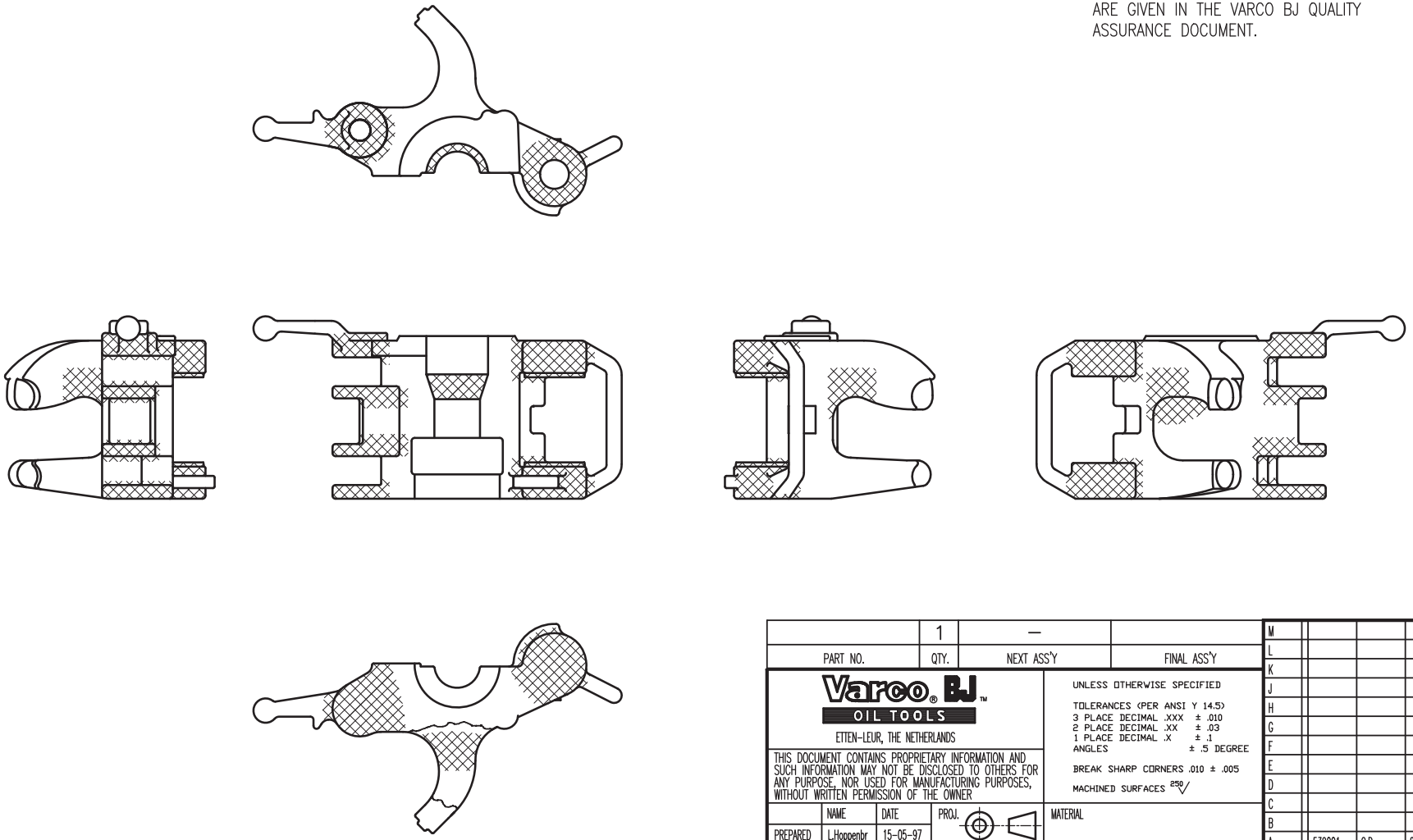

PART NO.	QTY.	NEXT ASS'Y	FINAL ASS'Y
	1	—	

Varco BJ OIL TOOLS
ETTEN-LEUR, THE NETHERLANDS

UNLESS OTHERWISE SPECIFIED
TOLERANCES (PER ANSI Y 14.5)
3 PLACE DECIMAL .XXX ± .010
2 PLACE DECIMAL .XX ± .03
1 PLACE DECIMAL .X ± .1
ANGLES ± .5 DEGREE
BREAK SHARP CORNERS .010 ± .005
MACHINED SURFACES 250

	NAME	DATE	PROJ.	MATERIAL
PREPARED	L.Hoppenbr	15-05-97		
CHECKED	C.Dekkers	15-05-97	SCALE 1 : 8	
APPROVED	R.v.Dooren	15-05-97	UNITS INCH (MM)	WEIGHT LBS/ KG

REV.	E.C.N.	NAME	DATE	CHECKED
A	539001	C.D.	20-05-97	A.d.P.

ACAD FILE NO. : CA300M.DWG

TITLE CRITICAL AREAS BODY CENTER LATCH "G" TYPE ELEV. MACHINING.

SIZE B | DRAWING NO. CA-300-M | SHEET 1 OF 1

REDRAWN / REPLACED BY:

REPLACES: CA200.DWG

NOTES:
1. HATCHED AREAS ARE COSIDERED CRITICAL
2. AREAS NOT HATCHED ARE CONSIDERED NON CRITICAL
3. THE ACCEPTANCE CRITERIA TO BE APPLIED ARE GIVEN IN THE VARCO BJ QUALITY ASSURANCE DOCUMENT.

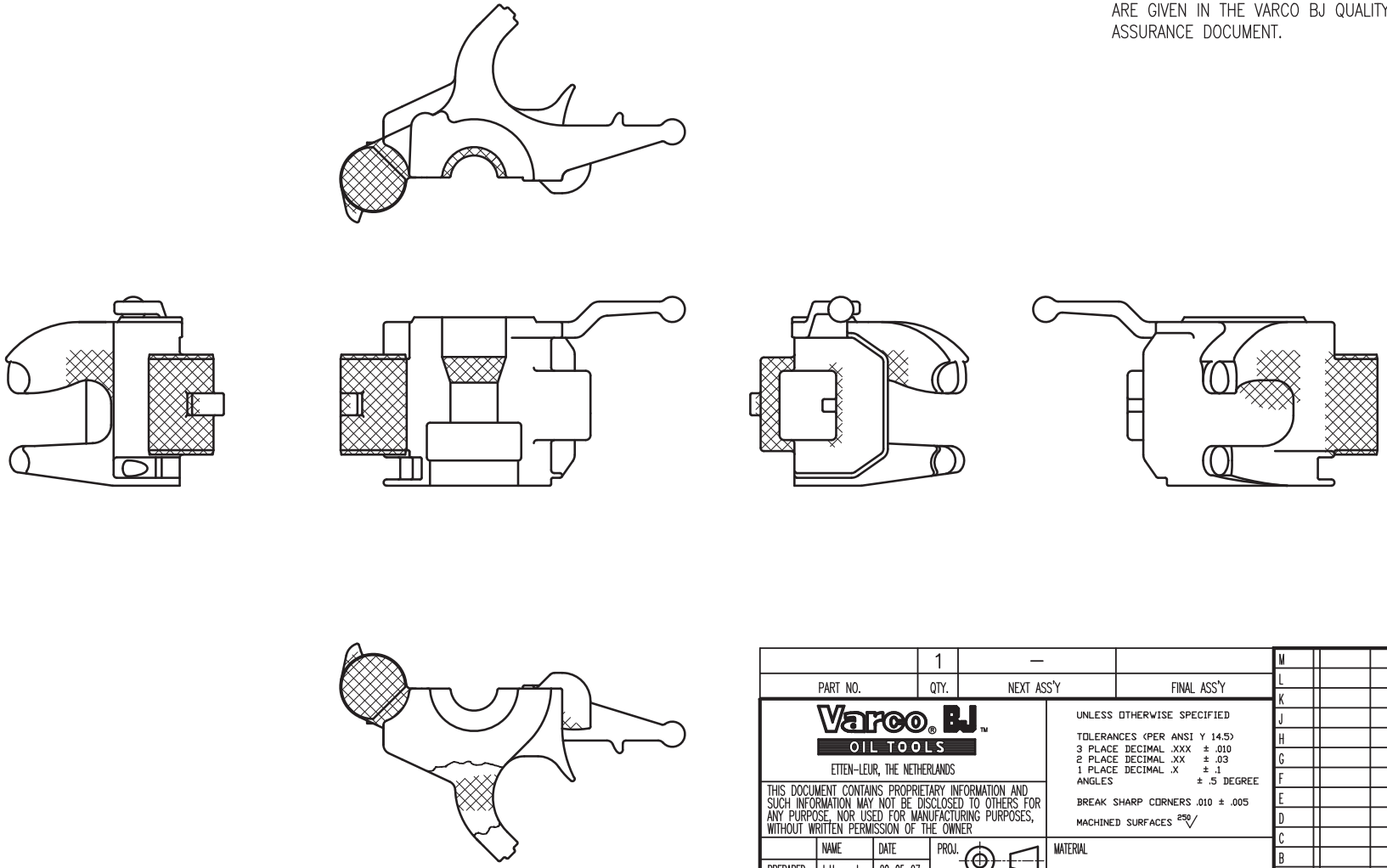

PART NO.	QTY.	NEXT ASS'Y	FINAL ASS'Y
	1	—	

Varco BJ OIL TOOLS
ETTEN-LEUR, THE NETHERLANDS

UNLESS OTHERWISE SPECIFIED
TOLERANCES (PER ANSI Y 14.5)
3 PLACE DECIMAL .XXX ± .010
2 PLACE DECIMAL .XX ± .03
1 PLACE DECIMAL .X ± .1
ANGLES ± .5 DEGREE
BREAK SHARP CORNERS .010 ± .005
MACHINED SURFACES 250

	NAME	DATE	PROJ.	MATERIAL
PREPARED	L.Hoppenbr	20-05-97		
CHECKED	C.Dekkers	20-05-97	SCALE 1 : 8	
APPROVED	R.v.Dooren	20-05-97	UNITS INCH (MM)	WEIGHT LBS/ KG

REV.	E.C.N.	NAME	DATE	CHECKED
A	539001	C.D.	20-05-97	A.d.P.

ACAD FILE NO. : CA301M.DWG

TITLE CRITICAL AREAS DOOR CENTER LATCH "G" TYPE ELEV. MACHINING.

SIZE B | DRAWING NO. CA-301-M | SHEET 1 OF 1

REDRAWN / REPLACED BY:

REPLACES: CA200.DWG

NOTES:
1. HATCHED AREAS ARE CONSIDERED CRITICAL
2. AREAS NOT HATCHED ARE CONSIDERED NON CRITICAL
3. THE ACCEPTANCE CRITERIA TO BE APPLIED ARE GIVEN IN THE VARCO BJ QUALITY ASSURANCE DOCUMENT.

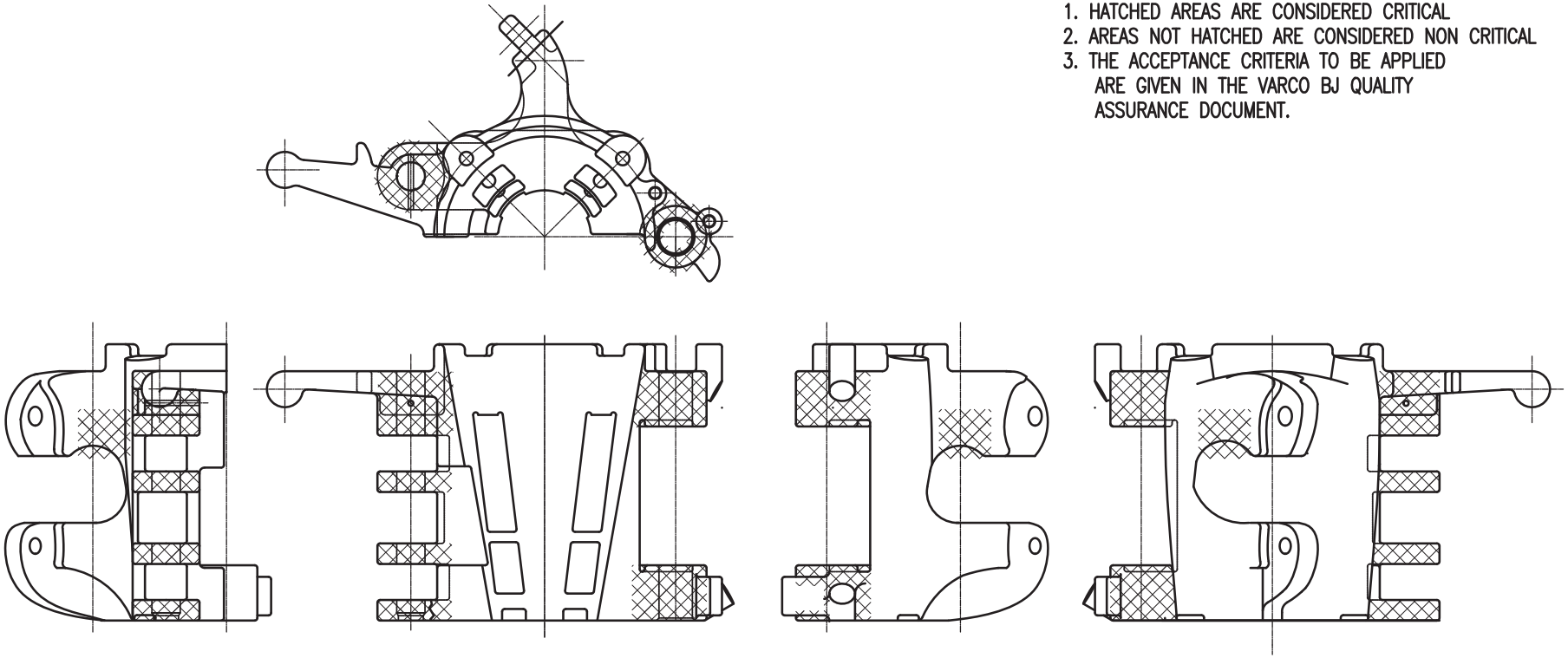

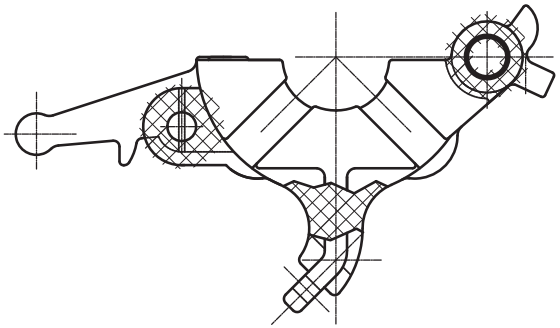

PART NO.	QTY.	NEXT ASS'Y	FINAL ASS'Y
	1	—	

Varco® BJ™ OIL TOOLS
ETTEN-LEUR, THE NETHERLANDS

UNLESS OTHERWISE SPECIFIED

TOLERANCES (PER ANSI Y 14.5)
3 PLACE DECIMAL .XXX ± .010
2 PLACE DECIMAL .XX ± .03
1 PLACE DECIMAL .X ± .1
ANGLES ± .5 DEGREE

BREAK SHARP CORNERS .010 ± .005

MACHINED SURFACES 250

	NAME	DATE	PROJ.	MATERIAL
PREPARED	PvC	08-07-'97		
CHECKED	C.D.	10-07-'97	SCALE 1 : 5	
APPROVED	R.v.D.	11-07-'97	UNITS INCH (MM)	WEIGHT LBS/ KG

REV.	E.C.N.	NAME	DATE	CHECKED
M				
L				
K				
J				
H				
G				
F				
E				
D				
C				
B				
A	541801	PvC	08-07-'97	C.D.

ACAD FILE NO. :

TITLE CRITICAL AREAS BODY
Y- TYPE ELEVATOR MACHINING

SIZE B

DRAWING NO. CA-302-M

SHEET 1 OF 1

REDRAWN / REPLACED BY:

REPLACES:

NOTES:
1. HATCHED AREAS ARE CONSIDERED CRITICAL
2. AREAS NOT HATCHED ARE CONSIDERED NON CRITICAL
3. THE ACCEPTANCE CRITERIA TO BE APPLIED ARE GIVEN IN THE VARCO BJ QUALITY ASSURANCE DOCUMENT.

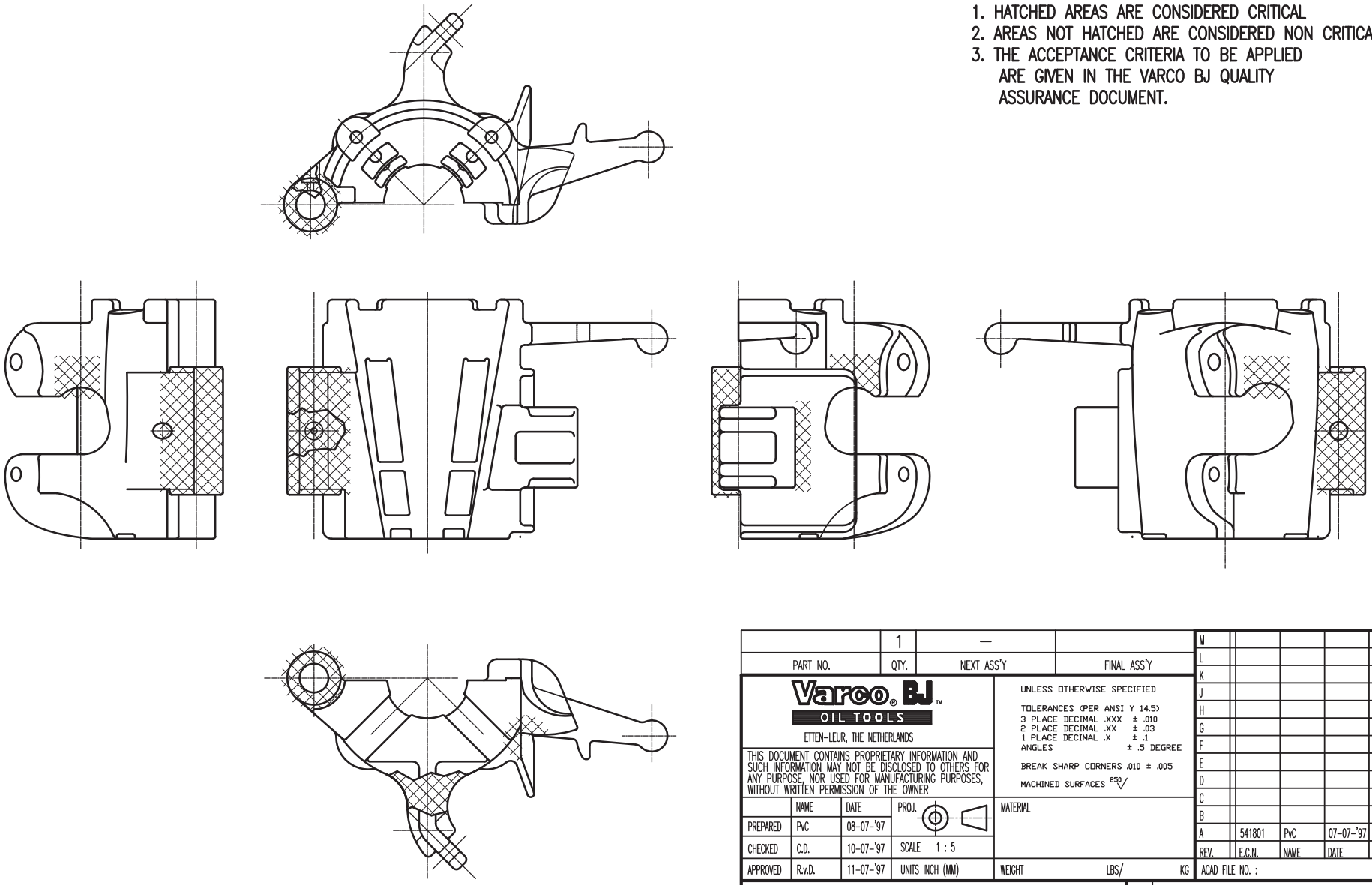

PART NO.	QTY.	NEXT ASS'Y	FINAL ASS'Y
	1	—	

Varco BJ OIL TOOLS
ETTEN-LEUR, THE NETHERLANDS

UNLESS OTHERWISE SPECIFIED
TOLERANCES (PER ANSI Y 14.5)
3 PLACE DECIMAL .XXX ± .010
2 PLACE DECIMAL .XX ± .03
1 PLACE DECIMAL .X ± .1
ANGLES ± .5 DEGREE
BREAK SHARP CORNERS .010 ± .005
MACHINED SURFACES 250

	NAME	DATE	PROJ.	MATERIAL
PREPARED	PvC	08-07-'97		
CHECKED	C.D.	10-07-'97	SCALE 1 : 5	
APPROVED	R.v.D.	11-07-'97	UNITS INCH (MM)	WEIGHT LBS/ KG

REV.	E.C.N.	NAME	DATE	CHECKED
M				
L				
K				
J				
H				
G				
F				
E				
D				
C				
B				
A	541801	PvC	07-07-'97	C.D.

ACAD FILE NO. :

TITLE CRITICAL AREAS DOOR
Y- TYPE ELEVATOR MACHINING

SIZE B
DRAWING NO. CA-303-M
SHEET 1 OF 1

REDRAWN / REPLACED BY:
REPLACES:

NOTES:
1. HATCHED AREAS ARE CONSIDERED CRITICAL
2. AREAS NOT HATCHED ARE CONSIDERED NON CRITICAL
3. THE ACCEPTANCE CRITERIA TO BE APPLIED ARE GIVEN IN THE VARCO BJ QUALITY ASSURANCE DOCUMENT.

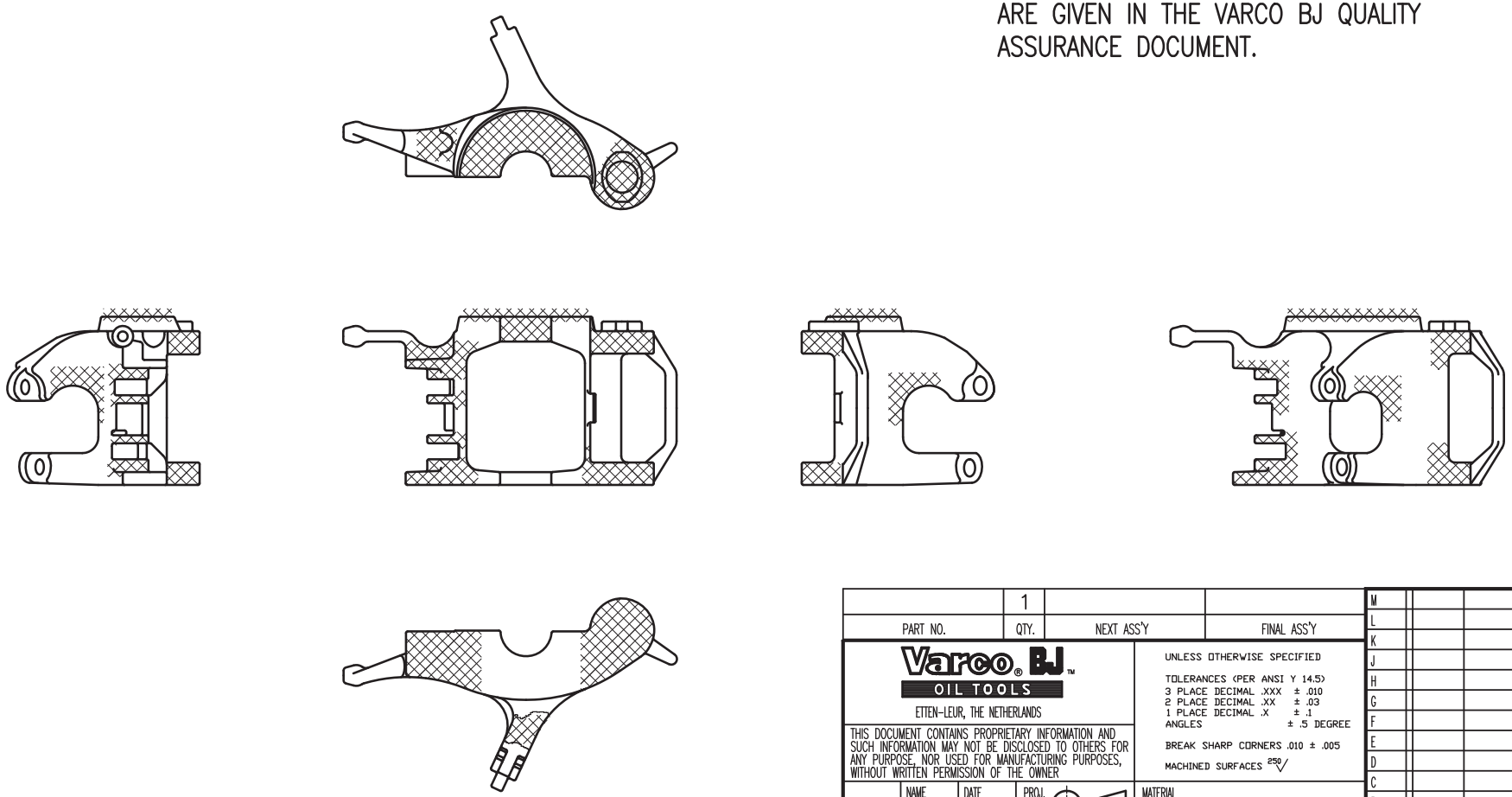

PART NO.	QTY.	NEXT ASS'Y	FINAL ASS'Y
	1		

Varco BJ OIL TOOLS
ETTEN-LEUR, THE NETHERLANDS

UNLESS OTHERWISE SPECIFIED
TOLERANCES (PER ANSI Y 14.5)
3 PLACE DECIMAL .XXX ± .010
2 PLACE DECIMAL .XX ± .03
1 PLACE DECIMAL .X ± .1
ANGLES ± .5 DEGREE
BREAK SHARP CORNERS .010 ± .005
MACHINED SURFACES 250

	NAME	DATE	PROJ.	MATERIAL
PREPARED	C.Dekkers	01-22-'98		
CHECKED	A.d.Pont	01-22-'98	SCALE 1 : 8	
APPROVED	H.Tiebout	01-22-'98	UNITS INCH (MM)	WEIGHT LBS/ KG

REV.	E.C.N.	NAME	DATE	CHECKED
M				
L				
K				
J				
H				
G				
F				
E				
D				
C				
B				
A	554201	C.D.	01-22-'98	H.T.

ACAD FILE NO. :

TITLE CRITICAL AREAS BODY
A - TYPE ELEVATOR MACHINING

SIZE B | DRAWING NO. CA-304-M | SHEET 1 OF 1

REDRAWN / REPLACED BY:

REPLACES: CA202.DWG

NOTES:
1. HATCHED AREAS ARE CONSIDERED CRITICAL
2. AREAS NOT HATCHED ARE CONSIDERED NON CRITICAL
3. THE ACCEPTANCE CRITERIA TO BE APPLIED ARE GIVEN IN THE VARCO BJ QUALITY ASSURANCE DOCUMENT.

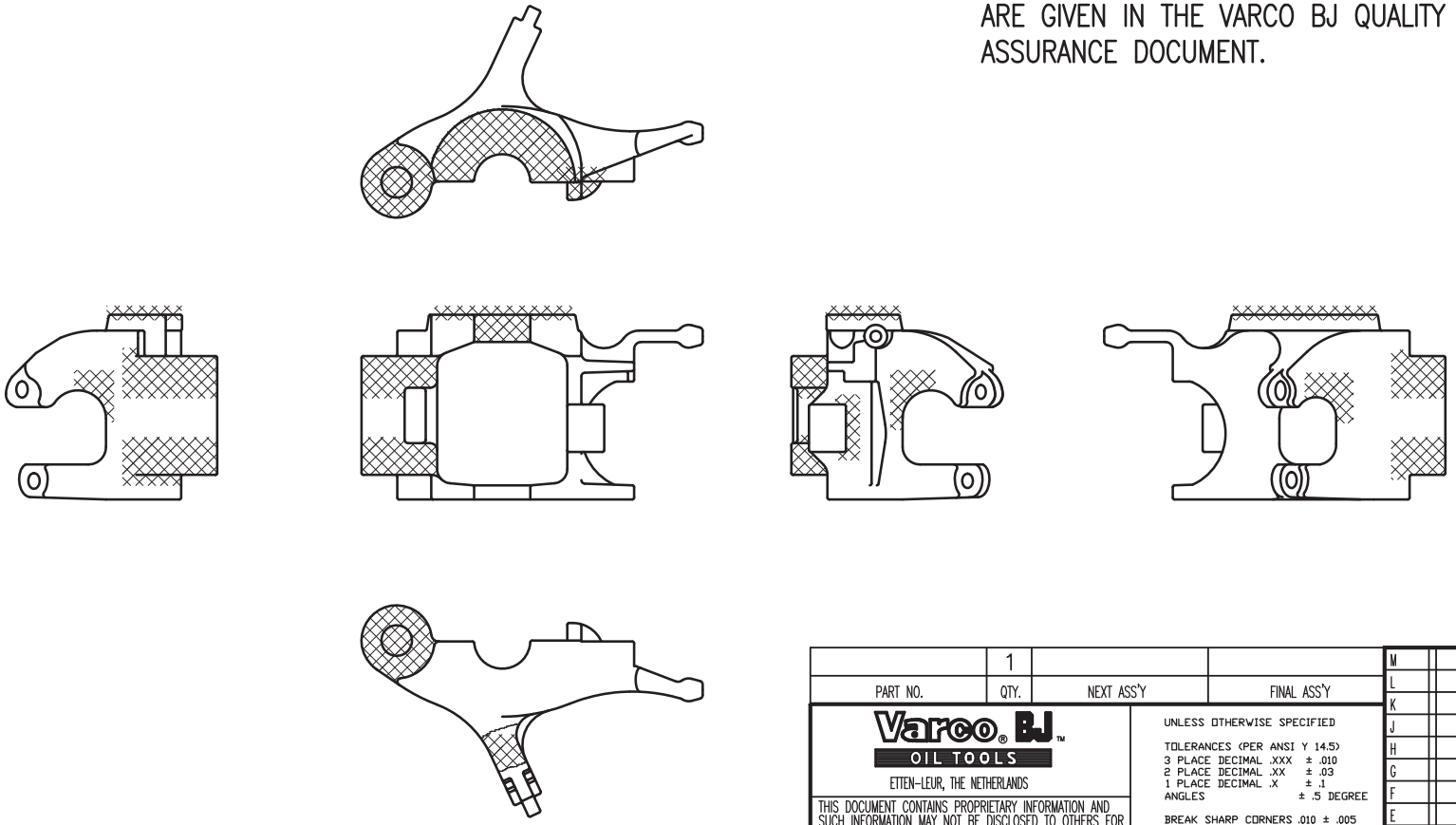

PART NO.	QTY.	NEXT ASS'Y	FINAL ASS'Y
	1		

Varco® BJ™ OIL TOOLS
ETTEN-LEUR, THE NETHERLANDS

UNLESS OTHERWISE SPECIFIED
TOLERANCES (PER ANSI Y 14.5)
3 PLACE DECIMAL .XXX ± .010
2 PLACE DECIMAL .XX ± .03
1 PLACE DECIMAL .X ± .1
ANGLES ± .5 DEGREE
BREAK SHARP CORNERS .010 ± .005
MACHINED SURFACES 250

	NAME	DATE	PROJ.	MATERIAL
PREPARED	P.v.Camp.	09-26-'97		
CHECKED	C.Dekkers	01-22-'98	SCALE 1 : 8	
APPROVED	H.Tiebout	01-22-'98	UNITS INCH (MM)	WEIGHT LBS/ KG

REV.	E.C.N.	NAME	DATE	CHECKED
A	554201	C.D.	01-22-'98	H.T.

ACAD FILE NO. :

TITLE CRITICAL AREAS DOOR
A - TYPE ELEVATOR MACHINING

SIZE B | DRAWING NO. CA-305-M | SHEET 1 OF 1

REDRAWN / REPLACED BY:

REPLACES: CA202.DWG

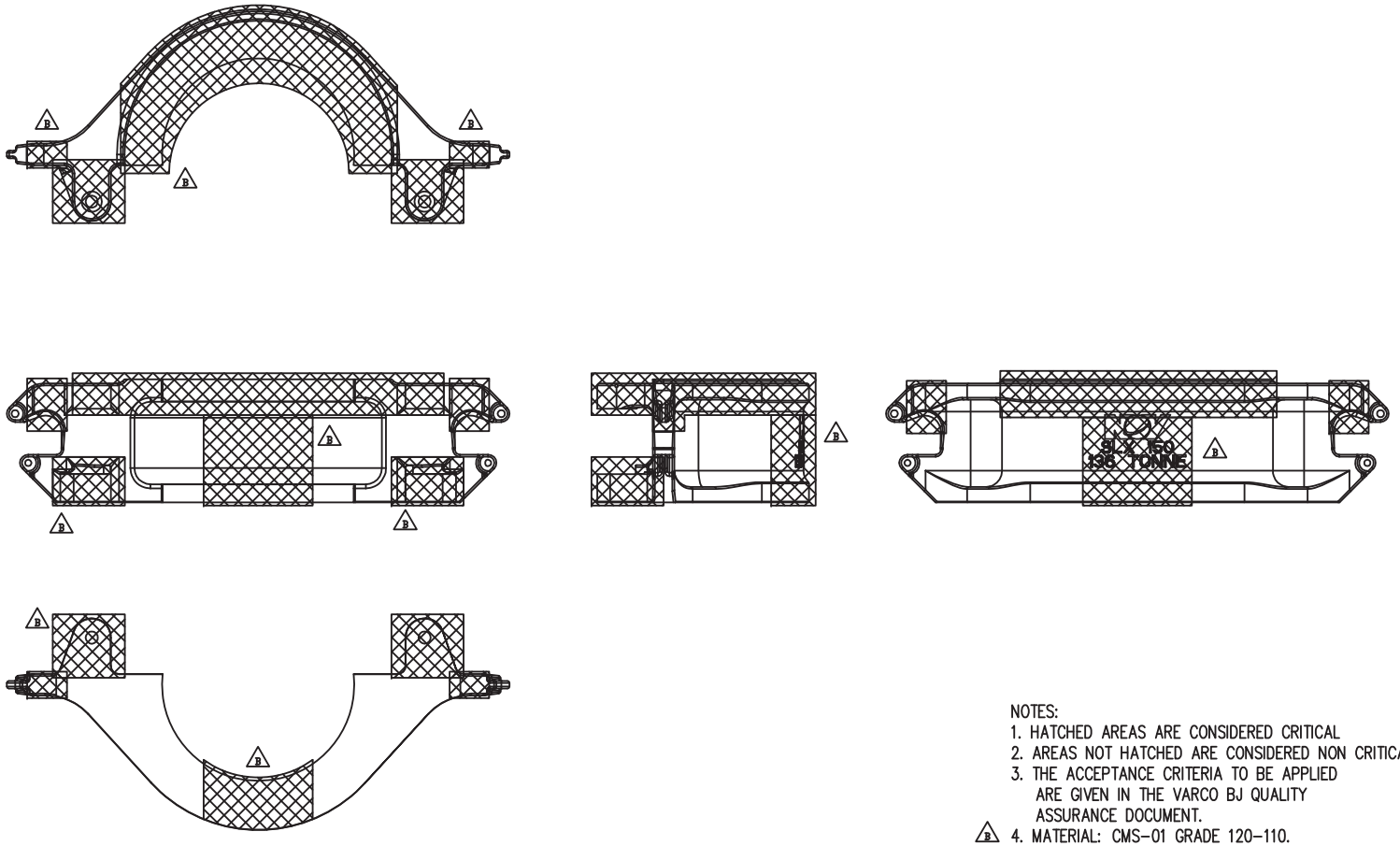

NOTES:
1. HATCHED AREAS ARE CONSIDERED CRITICAL
2. AREAS NOT HATCHED ARE CONSIDERED NON CRITICAL
3. THE ACCEPTANCE CRITERIA TO BE APPLIED ARE GIVEN IN THE VARCO BJ QUALITY ASSURANCE DOCUMENT.
4. MATERIAL: CMS-01 GRADE 120-110.

PARTNUMBER	—		
MATERIAL			
SURF. FINISH/ PAINT SPEC			
COLOR			
WEIGHT	LBS/	KG	
CREATED BY	C. Delmers	REV.	
CREATED ON	01-02-98		
REVISED BY	L.S.		
REVISED ON	10 Jan 2013	INF	B
TC-ECR	00009812		

UNLESS OTHERWISE SPECIFIED TOLERANCES PER ANSI Y 14.5D
3 PLACE DECIMAL .XXX ± .010
2 PLACE DECIMAL .XX ± .03
1 PLACE DECIMAL .X ± .1
ANGLES ± .5 DEGREE
BREAK SHARP CORNERS .004-.015
MACHINED SURFACES 250 √
TORCHCUT SURFACES 1000 √
ALL WELD SYMBOLS ACC. TO ISO
ALL WELD DIMENSIONS ARE 2 DIM'S

DO NOT SCALE DOCUMENT
THIS DOCUMENT IS TEAMCENTER CONTROLLED

NATIONAL OILWELL VARCO

SCALE 1:10

UNITS INCH (MM)

PROJ.

TITLE
CA BODY SIDE DOOR COLLAR TYPES MACHINIING

SIZE C

DRAWING NO. CA-306-M

SHEET 1 OF 1

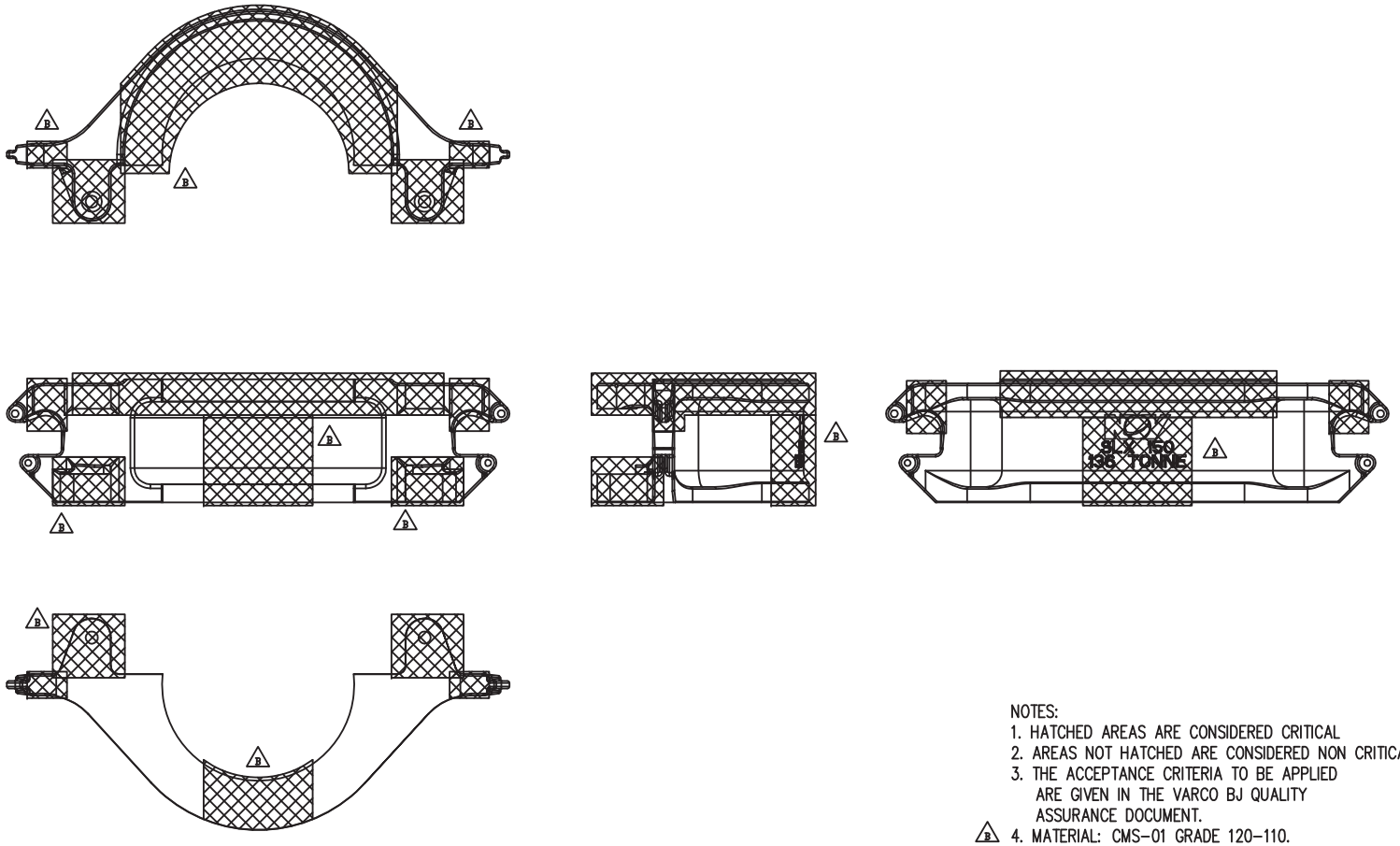

NOTES:
1. HATCHED AREAS ARE CONSIDERED CRITICAL
2. AREAS NOT HATCHED ARE CONSIDERED NON CRITICAL
3. THE ACCEPTANCE CRITERIA TO BE APPLIED ARE GIVEN IN THE VARCO BJ QUALITY ASSURANCE DOCUMENT.
4. MATERIAL: CMS-01 GRADE 120-110.

PARTNUMBER	—		
MATERIAL			
SURF. FINISH/ PAINT SPEC			
COLOR			
WEIGHT	LBS/	KG	
CREATED BY	C. Delmers	REV.	
CREATED ON	01-02-98		
REVISED BY	L.S.		
REVISED ON	10 Jan 2013	INF	B
TC-ECR	00009812		

UNLESS OTHERWISE SPECIFIED TOLERANCES PER ANSI Y 14.5D
3 PLACE DECIMAL .XXX ± .010
2 PLACE DECIMAL .XX ± .03
1 PLACE DECIMAL .X ± .1
ANGLES ± .5 DEGREE
BREAK SHARP CORNERS .004-.015
MACHINED SURFACES 250 √
TORCHCUT SURFACES 1000 √
ALL WELD SYMBOLS ACC. TO ISO
ALL WELD DIMENSIONS ARE 2 DIM'S

DO NOT SCALE DOCUMENT
THIS DOCUMENT IS TEAMCENTER CONTROLLED

NATIONAL OILWELL VARCO

SCALE 1:10

UNITS INCH (MM)

PROJ.

TITLE
CA BODY SIDE DOOR COLLAR TYPES MACHINIING

SIZE C

DRAWING NO. CA-306-M

SHEET 1 OF 1

NOTES:

1. HATCHED AREAS ARE CONSIDERED CRITICAL
2. AREAS NOT HATCHED ARE CONSIDERED NON CRITICAL
3. THE ACCEPTANCE CRITERIA TO BE APPLIED ARE GIVEN IN THE VARCO BJ QUALITY ASSURANCE DOCUMENT.

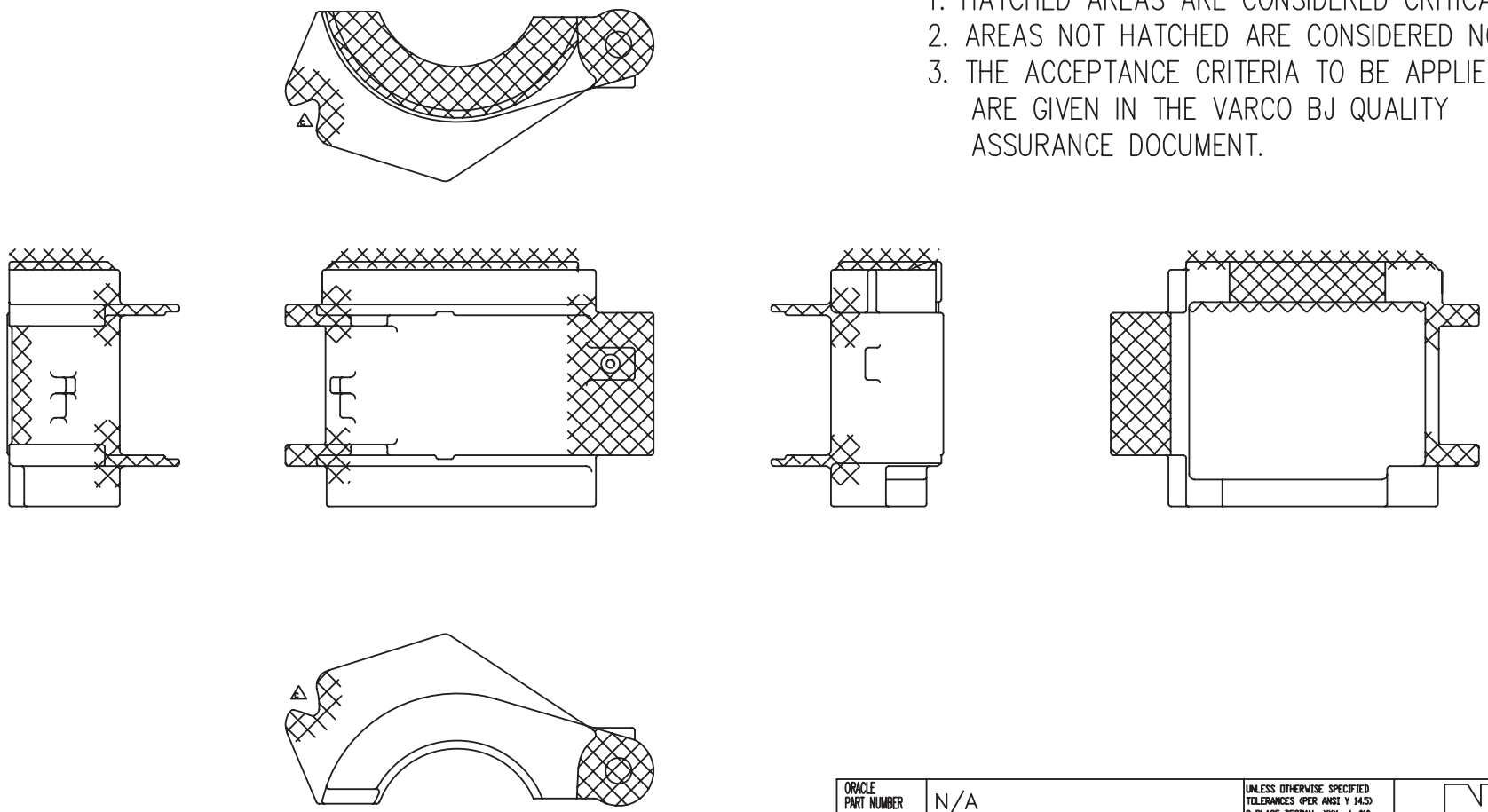

ORACLE PART NUMBER	N/A		
LEGACY PART NUMBER	N/A	REFERENCE ONLY	
MATERIAL	—		
SURF. FINISH/ PAINT SPEC	—	COLOR	—
WEIGHT	— LBS/	— KG	
CREATED BY	C. DEKKERS	REV.	C
CREATED ON	01-22-'98		
REVISED BY	Y. VERBRAAK		
REVISED ON	05-05-'15	INF	
TC-ECR	00036748		

UNLESS OTHERWISE SPECIFIED
TOLERANCES (PER ANSI Y 14.5)
3 PLACE DECIMAL .XXX ± .010
2 PLACE DECIMAL .XX ± .03
1 PLACE DECIMAL .X ± .1
ANGLES ± .5 DEGREE
BREAK SHARP CORNERS .010±.005
MACHINED SURFACES 250√
TORCHCUT SURFACES 1000√
ALL WELD SYMBOLS ACC. TO ISO
ALL WELD DIMENSIONS ARE Z DIM'S

DO NOT SCALE DOCUMENT

THIS DOCUMENT IS TEAMCENTER CONTROLLED

NATIONAL OILWELL VARCO

SCALE 1 : 5

UNITS INCH (MM)

PROJ.

TITLE: CRITICAL AREA DOOR, SIDE DOOR COLLAR TYPES

SIZE: B

DRAWING NO. CA-307-M

SHEET 1 OF 1

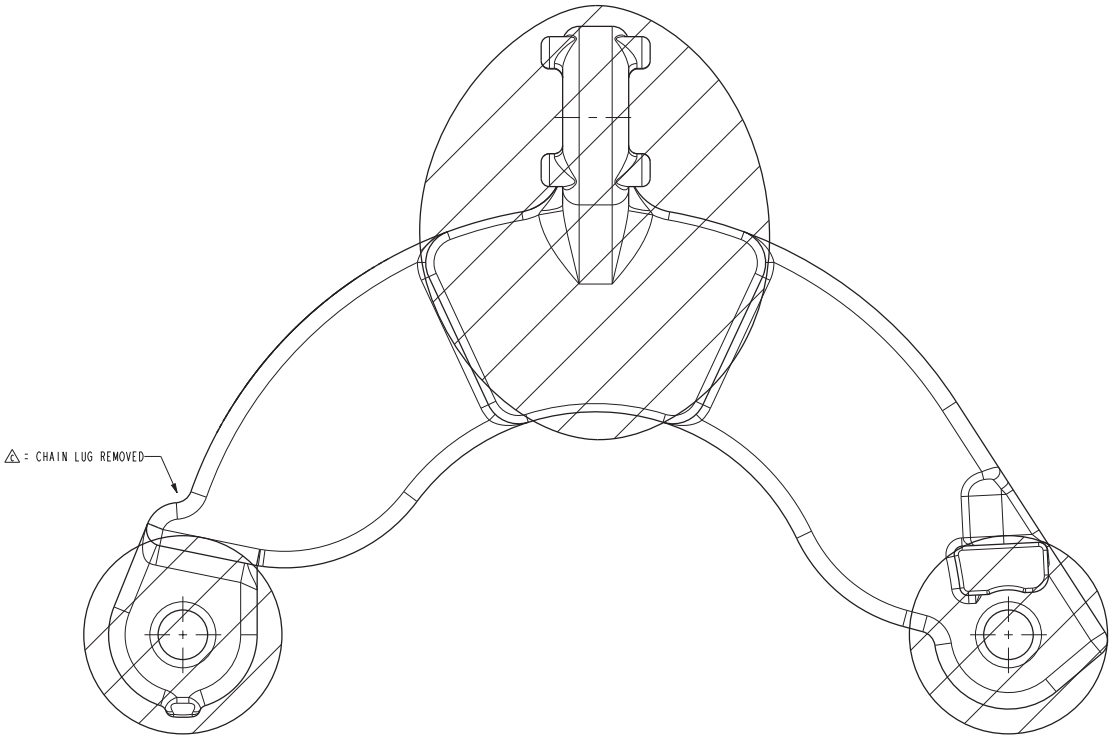

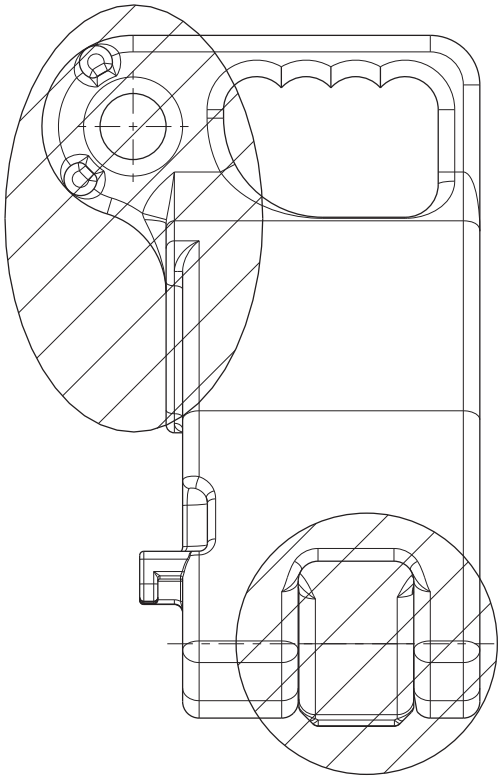

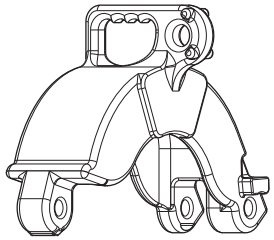

SCALE 1:3

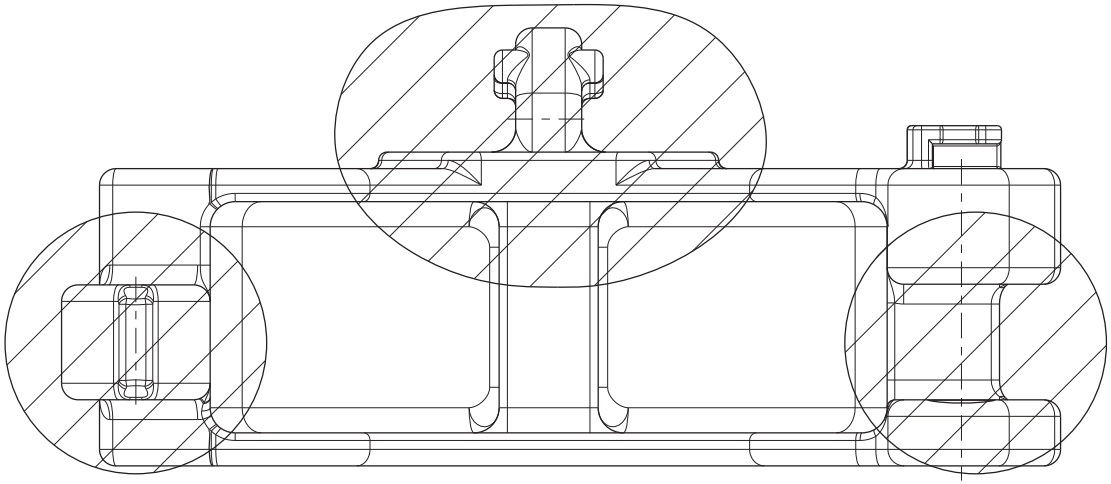

NOTES:
1. HATCHED AREAS ARE CONSIDERED CRITICAL.
2. AREAS NOT HATCHED ARE CONSIDERED NON CRITICAL.
3. THE ACCEPTANCE CRITERIA TO BE APPLIED ARE GIVEN IN THE NOV / VARCO BJ QUALITY ASSURANCE DOCUMENT.

△4

CASTING PARTNUMBERS
50004941-C
50004942-C
50004943-C
50004944-C
50004944-1C

PARTNUMBER	SEE TABLE		
MATERIAL	CMS01_Grade_120-110		
SURF. FINISH / PAINTSPEC.	-		
COLOR	-		
WEIGHT	32.7 Lbs	14.8 kg	
CREATED BY	Mike Schats	REVISION	
CREATED ON	11-Mar-05 02:08:03 PM		
REVISED BY	Bjorn Buijnsters		
REVISED ON	18-Dec-12 05:10:42 PM		
TC - ECR	00011252 INF	C	

UNLESS OTHERWISE SPECIFIED
TOLERANCES (PER ANSI Y 14.5)
3 PLACE DECIMAL .XXX ± .010
2 PLACE DECIMAL .XX ± .03
1 PLACE DECIMAL .X ± .1
ANGLES ± .5 DEGREE
BREAK SHARP CORNERS .010 ± .005
MACHINED SURFACES 250
TORCHCUT SURFACES 1000
ALL WELD SYMBOLS ACC. TO ISO
ALL WELD DIMENSIONS ARE 2 DIM'S

DO NOT SCALE DOCUMENT
THIS DOCUMENT IS NOV TEAMCENTER CONTROLLED

NATIONAL OILWELL VARCO

SCALE 1:1
UNITS INCH (mm)
PROJ.

TITLE
CRITICAL AREAS BODY SJX

SIZE D
DRAWING NO. CA-310-M
SHEET 1 OF 1

PART NUMBER
CA-311-M

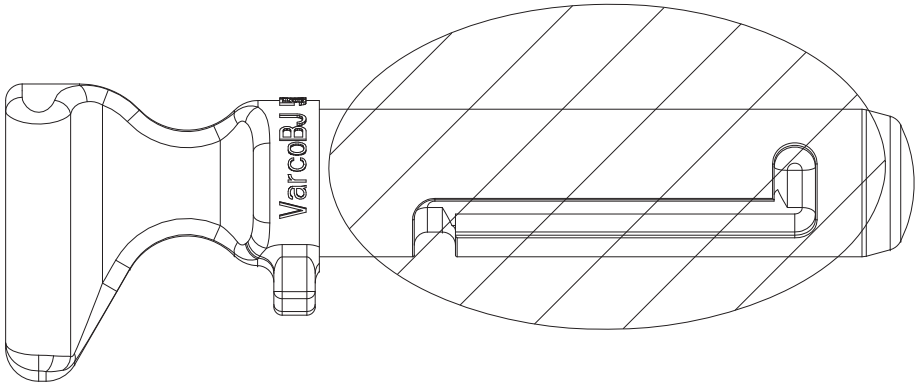

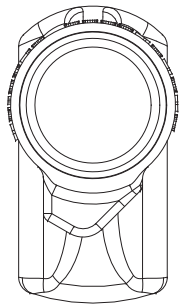

NOTES:
1. HATCHED AREAS ARE CONSIDERED CRITICAL
2. AREAS NOT HACHED ARE CONSIDERED NON CRITICAL
3. THE ACCEPTANCE CRITERIA TO BE APPLIED ARE GIVEN IN THE VARCO BJ QUALITY ASSURANCE DOCUMENT

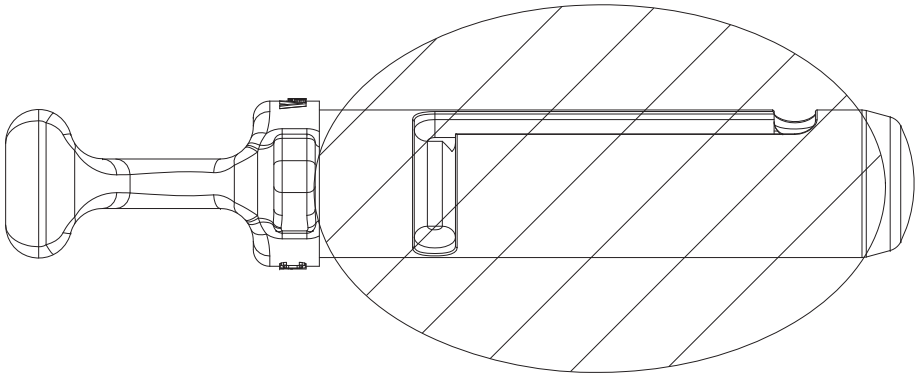

CA-311-M				K		-	-	-	-
PART NO.	QTY.	NEXT ASSY.	FINAL ASSY.	J		-	-	-	-
				I		-	-	-	-
				H		-	-	-	-
				G		-	-	-	-
				F		-	-	-	-
				E		-	-	-	-
				D		-	-	-	-
				C		-	-	-	-
				B		-	-	-	-
				A		601029	M.S.	17-JUNE-03	P.D.
				REV.		E.C.N	NAME	DATE	CHECKED

Varco BJ™
OIL TOOLS
ETTEN-LEUR, THE NETHERLANDS

UNLESS OTHERWISE SPECIFIED

TOLERANCES (PER ANSI Y 14.5)
3 PLACE DECIMAL .XXX ± .010
2 PLACE DECIMAL .XX ± .03
1 PLACE DECIMAL .X ± .1
ANGLES ± .5 DEGREE

BREAK SHARP CORNERS .010 ± .005

MACHINED SURFACES 250

	NAME	DATE	PROJ.
APPROVED	A.K.	17-JUNE-03	
CHECKED	P.D.	17-JUNE-03	SCALE 1:1
PREPARED	M.S.	17-Jun-03	UNITS INCH (MM)

MATERIAL

WEIGHT LBS/ KG

TITLE
CRITICAL AREA 50004940

SIZE B

DRAWING NO. CA-311-M

SHEET 1 OF 1

REDRAWN / REPLACED BY:

REPLACES:

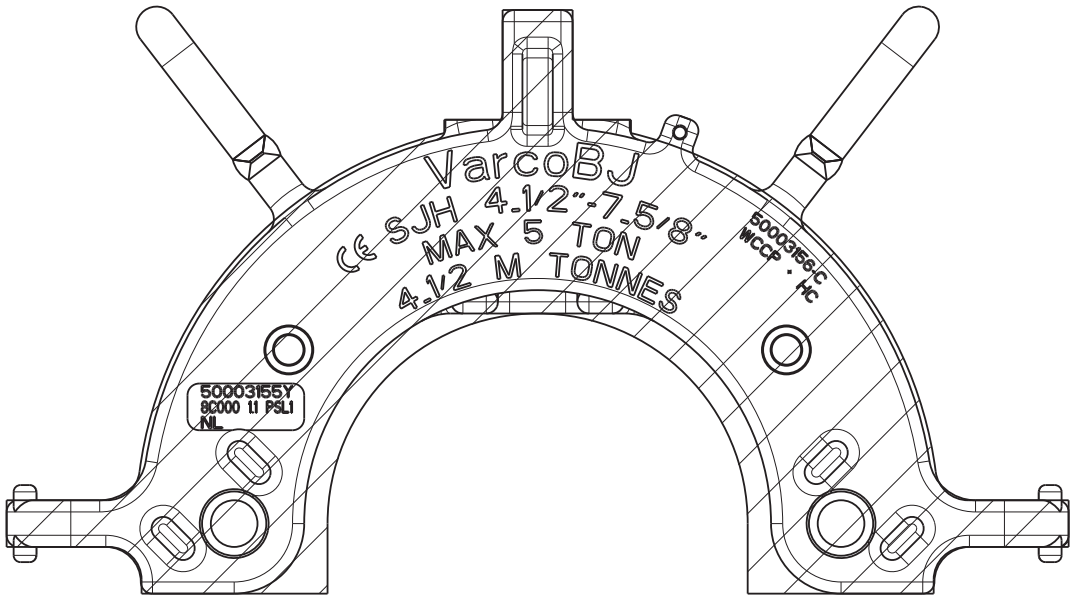

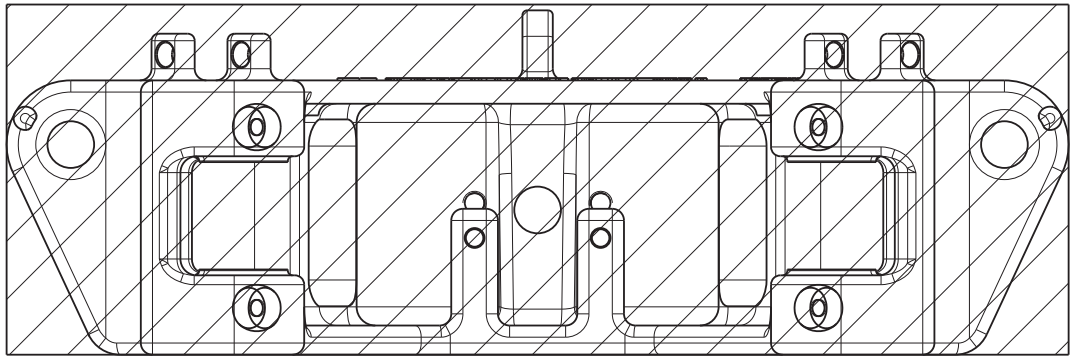

NOTES:
1. HATCHED AREAS ARE CONSIDERED CRITICAL.
2. NONE HATCHED AREAS ARE CONSIDERED NON CRITICAL.
3. THE ACCEPTANCE CRITERIA TO BE APPLIED ARE GIVEN IN THE VARCO BJ QAULITY ASSURANCE WORK INSTRUCTION QAW 8.11.1

PARTNUMBER	CA-312-M			UNLESS OTHERWISE SPECIFIED TOLERANCES (PER ANSI Y 14.5) 3 PLACE DECIMAL .XXX ± .010 2 PLACE DECIMAL .XX ± .03 1 PLACE DECIMAL .X ± .1 ANGLES ± .5 DEGREE BREAK SHARP CORNERS .010 ± .005 MACHINED SURFACES 250/ TORCHCUT SURFACES 1000/	NATIONAL OILWELL VARCO THIS DOCUMENT CONTAINS PROPRIETARY INFORMATION AND SUCH INFORMATION MAY NOT BE DISCLOSED TO OTHERS FOR ANY PURPOSE, NOR USED FOR MANUFACTURING PURPOSES, WITHOUT WRITTEN PERMISSION OF THE OWNER
MATERIAL					
SURF. FINISH / PAINTSPEC.	-				
COLOR	-				
WEIGHT	69.6 Lbs	31.6 kg			
ORIGINAL DOCUMENT	LATEST REVISION			DO NOT SCALE DOCUMENT	SCALE 1:2
NAME N.d.K.	NAME L.S.		REV.		PROJ.
DATE 06-Oct-04	DATE 22 FEB 05		A	THIS DOCUMENT IS DMS CONTROLLED	UNITS INCH (mm)
	E.C.N. 601352				
TITLE Body, Weldment for SJH 4.1/2"-6.5/8"				SIZE C	DRAWING NO. CA-312-M
					SHEET 1 OF 1

ITEM	QTY	PART NUMBER	DESCRIPTION
1	1	50003136-W	Body,Weldment for SJH 2_3/8" - 4_1/2"

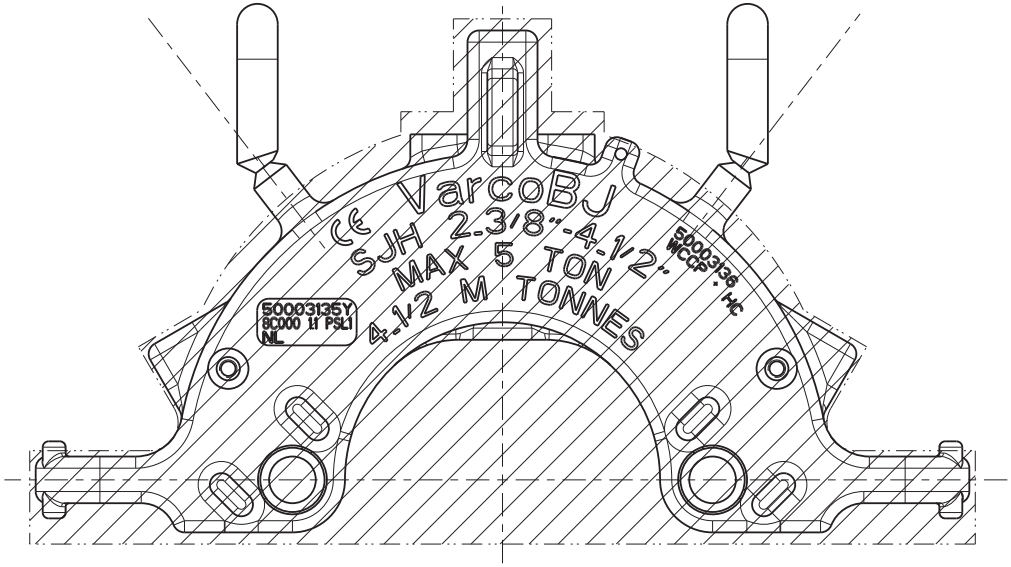

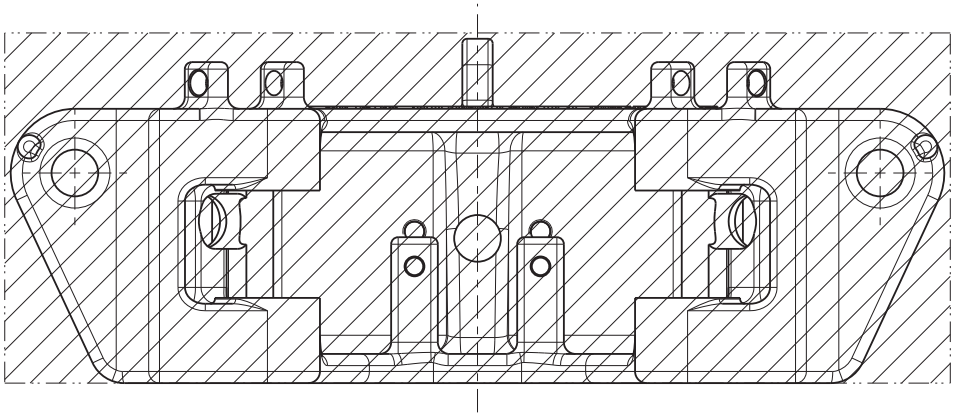

NOTES:
1. HATCHED AREAS ARE CONSIDERED CRITICAL.
2. NONE HATCHED AREAS ARE CONSIDERED NON CRITICAL.
3. THE ACCEPTANCE CRITERIA TO BE APPLIED ARE GIVEN IN THE VARCO BJ QAULITY ASSURANCE WORK INSTRUCTION QAW 8.11.1.

PARTNUMBER	CA-313-M
MATERIAL	CMS-01
SURF. FINISH / PAINTSPEC.	-
COLOR	-
WEIGHT	62.9 Lbs 28.5 kg

UNLESS OTHERWISE SPECIFIED
TOLERANCES (PER ANSI Y 14.5)
3 PLACE DECIMAL .XXX ± .010
2 PLACE DECIMAL .XX ± .03
1 PLACE DECIMAL .X ± .1
ANGLES ± .5 DEGREE
BREAK SHARP CORNERS .010 ± .005
MACHINED SURFACES 250/ 1000/
TORCHCUT SURFACES

NATIONAL OILWELL VARCO

ORIGINAL DOCUMENT		LATEST REVISION		REV.
NAME	L.S.	NAME	L.S.	A
DATE	07-Dec-04	DATE	07 DEC 04	
		E.C.N.	601352	

DO NOT SCALE DOCUMENT
THIS DOCUMENT IS DMS CONTROLLED
SCALE 1:2
UNITS INCH (mm)
PROJ.

TITLE: Critical Area, Body Weldm./Mach. SJH 2-3/8 - 4-1/2"
SIZE: C
DRAWING NO.: CA-313-M
SHEET 1 OF 1

ITEM	QTY	PART NUMBER	DESCRIPTION
1	1	50003176-W	Body, Weldment SJH 7" - 10_3/4"

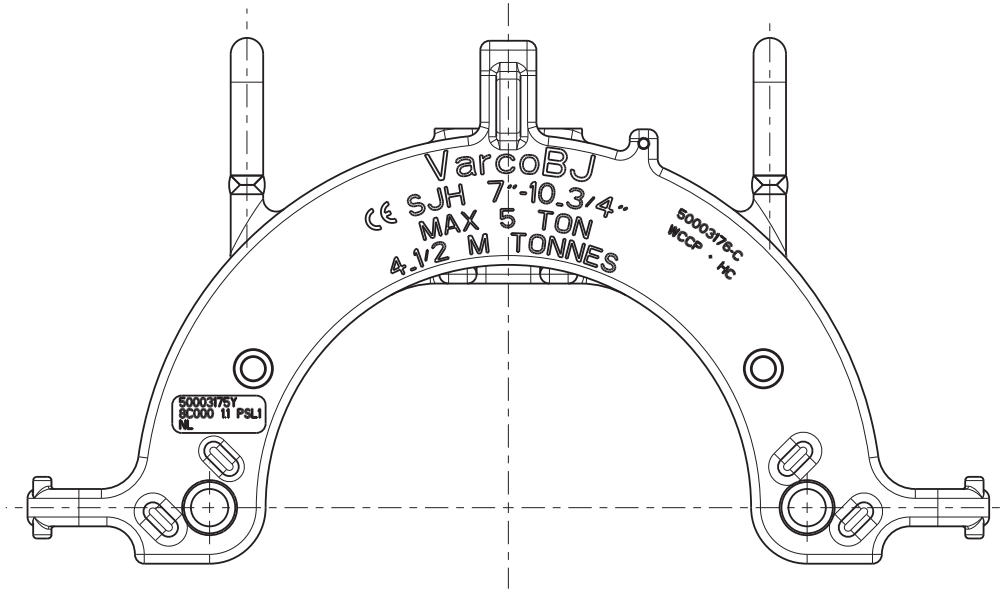

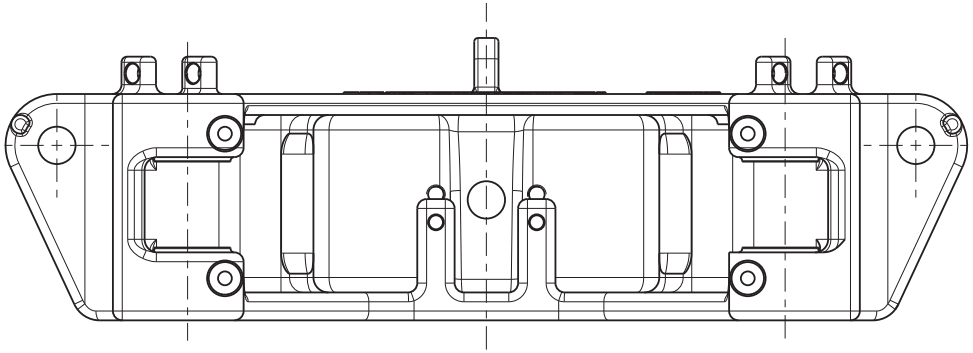

NOTES:
1. HATCHED AREAS ARE CONSIDERED CRITICAL.
2. NONE HATCHED AREAS ARE CONSIDERED NON CRITICAL.
3. THE ACCEPTANCE CRITERIA TO BE APPLIED ARE GIVEN IN THE VARCO BJ QAULITY ASSURANCE WORK INSTRUCTION QAW 8.11.1.

PARTNUMBER	CA-314-M
MATERIAL	CMS-01
SURF. FINISH / PAINTSPEC.	-
COLOR	-
WEIGHT	87.8 Lbs 39.8 kg

UNLESS OTHERWISE SPECIFIED
TOLERANCES (PER ANSI Y 14.5)
3 PLACE DECIMAL .XXX ± .010
2 PLACE DECIMAL .XX ± .03
1 PLACE DECIMAL .X ± .1
ANGLES ± .5 DEGREE
BREAK SHARP CORNERS .010 ± .005
MACHINED SURFACES 250
TORCHCUT SURFACES 1000

NATIONAL OILWELL VARCO

ORIGINAL DOCUMENT		LATEST REVISION		REV.
NAME	L.S.	NAME	L.S.	A
DATE	08-Dec-04	DATE	08 DEC 04	
		E.C.N.	601352	

DO NOT SCALE DOCUMENT
THIS DOCUMENT IS DMS CONTROLLED
SCALE 2:5
UNITS INCH (mm)
PROJ.

TITLE: Critical Area, Body Weldm./Mach. for SJH 7" - 10-3/4"
SIZE: C
DRAWING NO.: CA-314-M
SHEET 1 OF 1

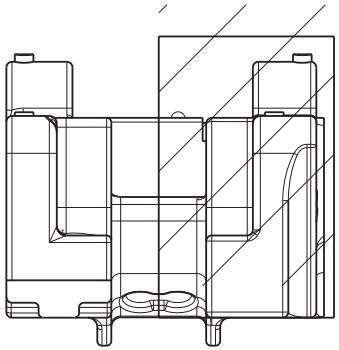

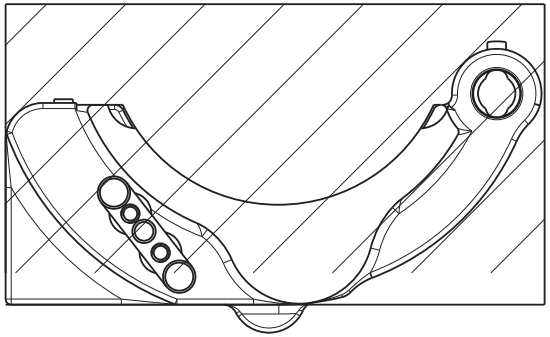

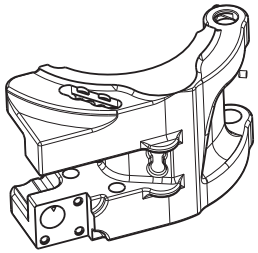

SCALE 1:5

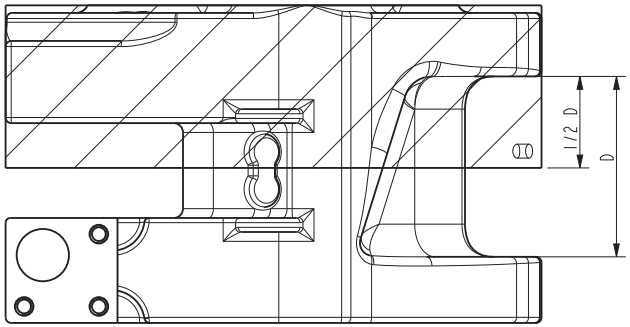

NOTES:
1. HATCHED AREAS ARE CONCIDERED CRITICAL.
2. THE ACCEPTANCE CRITERIA TO BE APPLIED, ARE GIVEN IN THE VARCO BJ QUALITY ASSURANCE DOCUMENT

PARTNUMBER	500064(03),29,33,43,53,58,63				
MATERIAL					
SURF. FINISH / PAINTSPEC.	-				
COLOR	-				
WEIGHT	- Lbs - kg				
ORIGINAL DOCUMENT		LATEST REVISION			
NAME	CdL	NAME	CdL	REV.	
DATE	08-OCT-07	DATE	08-OCT-07	-	
		E.C.N.	0700526		

UNLESS OTHERWISE SPECIFIED

TOLERANCES (PER ANSI Y 14.5)
3 PLACE DECIMAL .XXX ± .010
2 PLACE DECIMAL .XX ± .03
1 PLACE DECIMAL .X ± .1
ANGLES ± .5 DEGREE

BREAK SHARP CORNERS .010 ± .005

MACHINED SURFACES 250

TORCHCUT SURFACES 1000

DO NOT SCALE DOCUMENT

THIS DOCUMENT IS PDMlink CONTROLLED

NATIONAL OILWELL VARCO

SCALE 2:5

UNITS INCH (mm)

PROJ.

TITLE
CRITICAL AREA SMX DOOR MACH.

SIZE C

DRAWING NO. CA-323-M

SHEET 1 OF 1

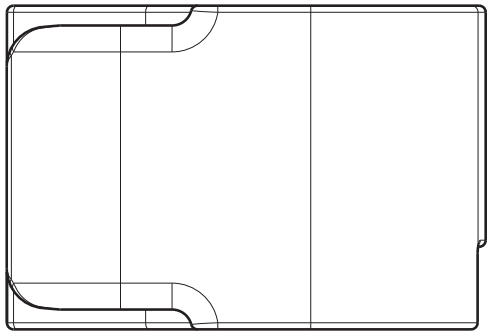

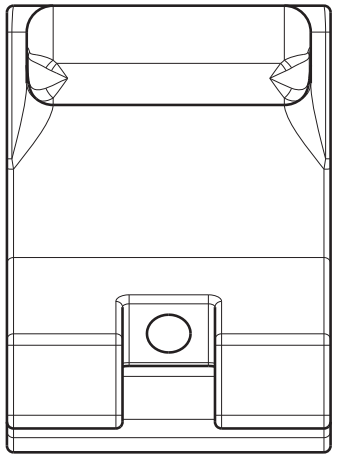

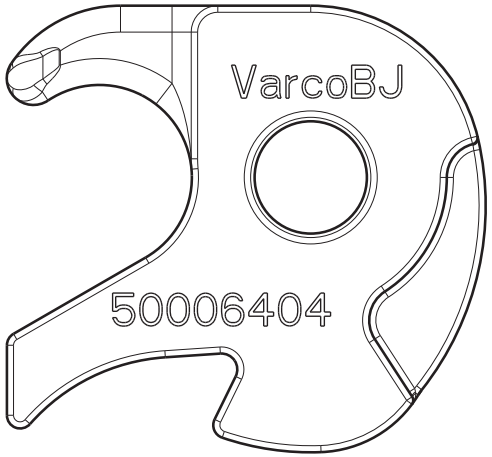

SCALE 1:2

A NOTES:
1. WHOLE PART IS CONCIDERED CRITICAL.
2. THE ACCEPTANCE CRITERIA TO BE APPLIED, ARE GIVEN IN THE VARCO BJ QUALITY ASSURANCE DOCUMENT

PARTNUMBER	50006404-C
MATERIAL	CMS01
SURF. FINISH / PAINTSPEC.	-
COLOR	-
WEIGHT	4.8 Lbs 2.2 kg

UNLESS OTHERWISE SPECIFIED

TOLERANCES (PER ANSI Y 14.5)
3 PLACE DECIMAL .XXX ± .010
2 PLACE DECIMAL .XX ± .03
1 PLACE DECIMAL .X ± .1
ANGLES ± .5 DEGREE

BREAK SHARP CORNERS .010 ± .005

MACHINED SURFACES 250

TORCHCUT SURFACES 1000

NATIONAL OILWELL VARCO

ORIGINAL DOCUMENT		LATEST REVISION		
NAME	M.S.	NAME	CdL	REV.
DATE	22-Sep-05	DATE	16-NOV-06	A
		E.C.N.	0700387	

DO NOT SCALE DOCUMENT

THIS DOCUMENT IS PDMlink CONTROLLED

SCALE 1:1

UNITS INCH (mm)

PROJ.

TITLE
SMX CAMLATCH CASTING

SIZE B

DRAWING NO. CA-324-C

SHEET 1 OF 1

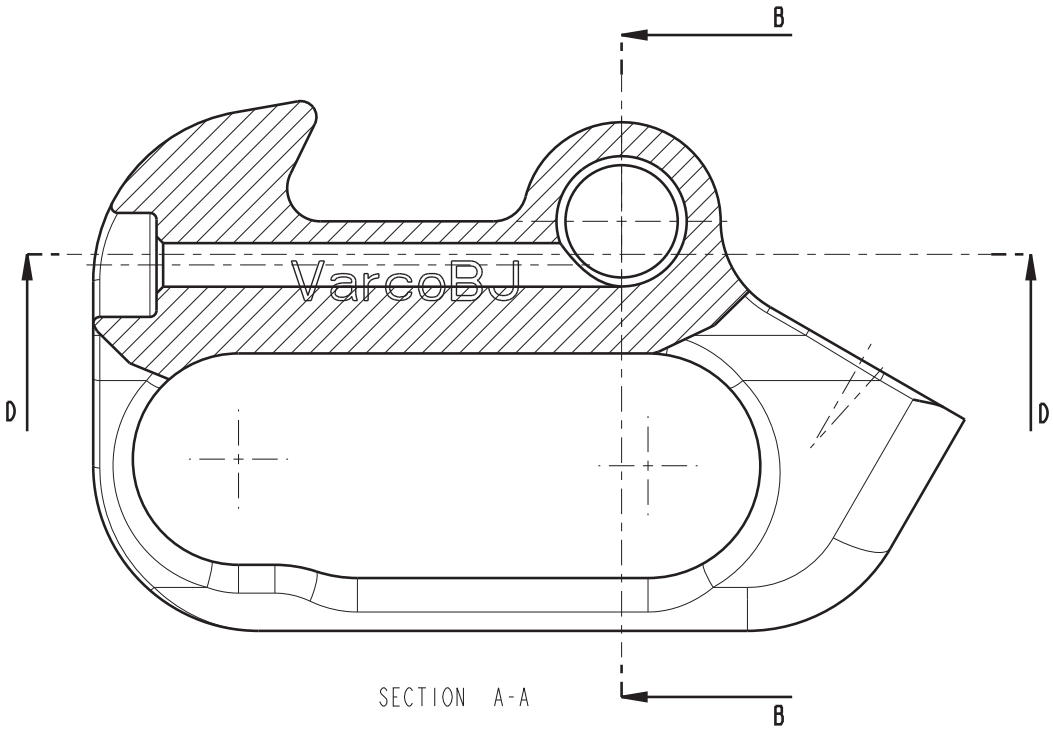

SECTION A-A

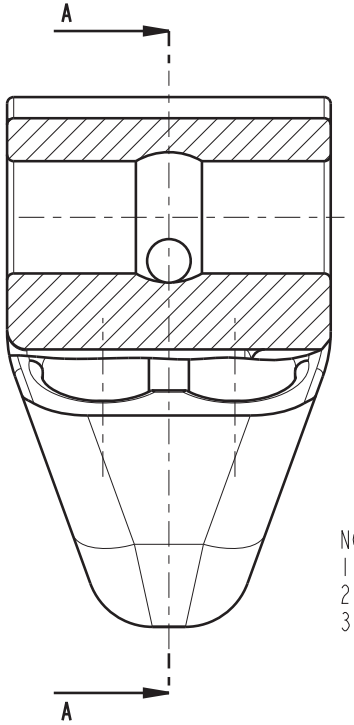

SECTION B-B

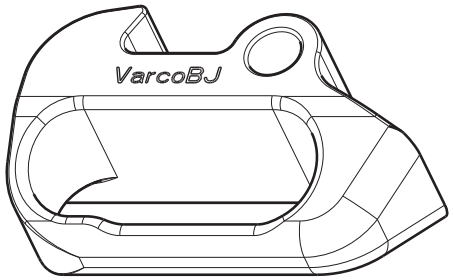

SCALE 1:2

NOTES:
1. HATCHED AREAS ARE CONCIDERED CRITICAL.
2. AREAS NOT HATCHED ARE CONCIDERED NON CRITICAL.
3. THE ACCEPTANCE CRITERIA TO BE APPLIED, ARE GIVEN IN THE VARCO BJ QUALITY ASSURANCE DOCUMENT

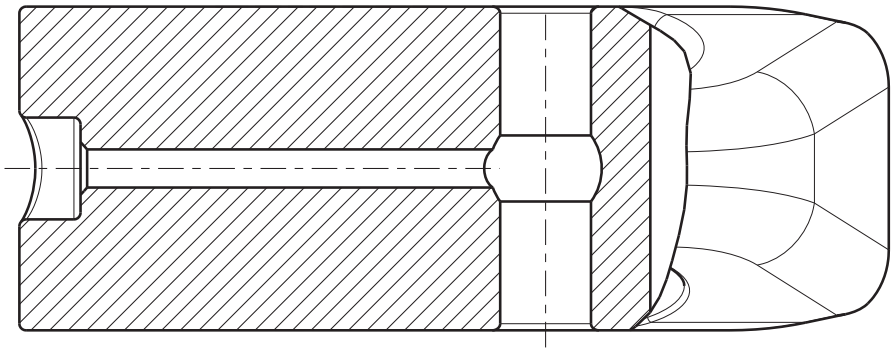

SECTION D-D

PARTNUMBER	50006405-C
MATERIAL	CMS01
SURF. FINISH / PAINTSPEC.	-
COLOR	-
WEIGHT	5.8 Lbs 2.6 kg

UNLESS OTHERWISE SPECIFIED

TOLERANCES (PER ANSI Y 14.5)
3 PLACE DECIMAL .XXX ± .010
2 PLACE DECIMAL .XX ± .03
1 PLACE DECIMAL .X ± .1
ANGLES ± .5 DEGREE

BREAK SHARP CORNERS .010 ± .005

MACHINED SURFACES 250

TORCHCUT SURFACES 1000

NATIONAL OILWELL VARCO

ORIGINAL DOCUMENT		LATEST REVISION		
NAME	M.S.	NAME	M.S.	REV.
DATE	22-Sep-05	DATE	Sept-22-05	-
		E.C.N.	0700103	

DO NOT SCALE DOCUMENT

THIS DOCUMENT IS PDMlink CONTROLLED

SCALE 1:1

UNITS INCH (mm)

PROJ.

TITLE: SMX CAMLATCHLOCK

SIZE: B

DRAWING NO. CA-325-C

SHEET 1 OF 1

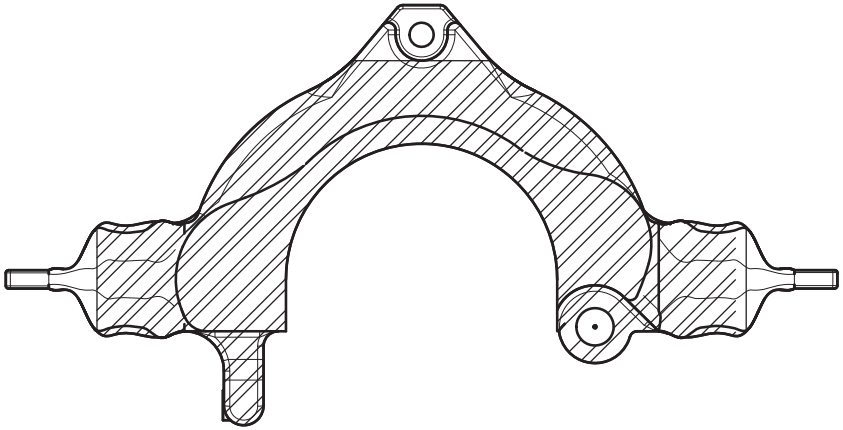

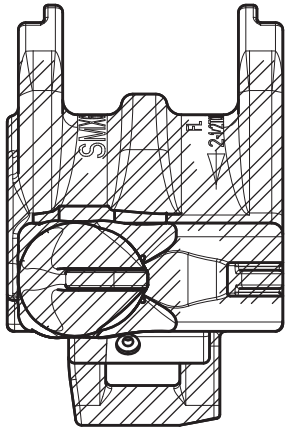

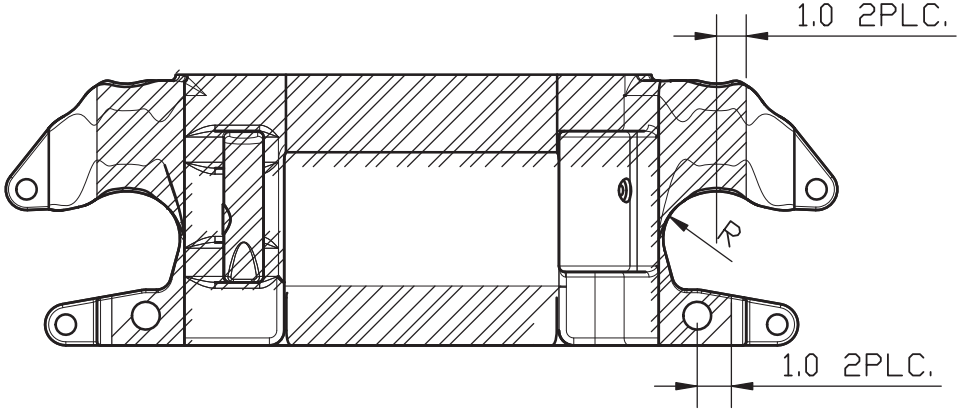

NOTES:
-THIS DRAWING REPLACES CA-322-M
-HATCHED AREAS ARE CONSIDERED CRITICAL
-THIS DRAWING IS VALID FOR PART NUMBER:
50006402YC
50006428YC
50006432YC
50006442YC/Y1C
50006452YC
50006457YC
50006462YC

PARTNUMBER	—
MATERIAL	CMS01
SURF. FINISH/ PAINT SPEC	—
COLOR	
WEIGHT	LBS/ KG

ORIGINAL DOCUMENT		LATEST REVISION		
NAME	CdL	NAME	CdL	REV.
DATE	26-MAR-08	DATE	26-MAR-08	—
DRAWING TYPE	CA	E.C.N.	0700618	

UNLESS OTHERWISE SPECIFIED TOLERANCES (PER ANSI Y 14.5)
3 PLACE DECIMAL .XXX ± .010
2 PLACE DECIMAL .XX ± .03
1 PLACE DECIMAL .X ± .1
ANGLES ± .5 DEGREE
BREAK SHARP CORNERS .010±.005
MACHINED SURFACES 250
TORCHCUT SURFACES 1000
ALL WELD SYMBOLS ACC. TO ISO

DO NOT SCALE DOCUMENT

THIS DOCUMENT IS DMS CONTROLLED

NATIONAL OILWELL VARCO

SCALE 1:4

UNITS INCH (MM)

PROJ.

TITLE
CRITICAL AREA SMX BODY MACHINING

SIZE B

DRAWING NO. CA-337-M

SHEET 1 OF 1

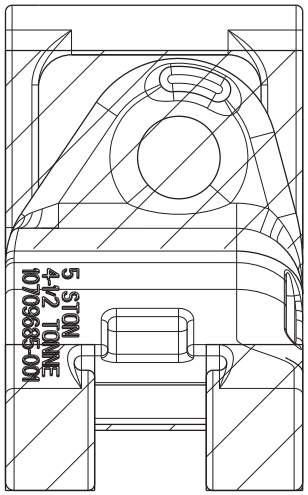

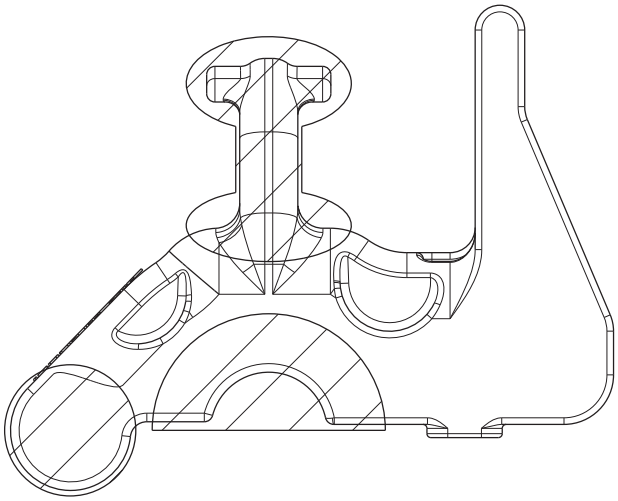

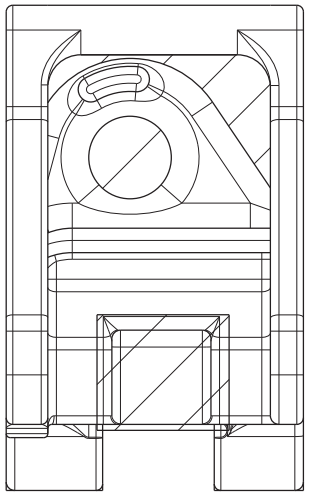

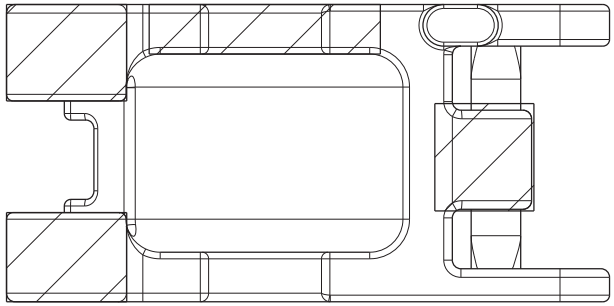

	DESCRIPTION
1,2,3	DOOR SJL-ELEVATOR, 2.3/8 - 5.1/2"
1,2,3	DOOR SJL-ELEVATOR, 5.5/8 - 7.3/4"
1,2,3	DOOR SJL-ELEVATOR, 7.7/8 - 11"
1,2,3	DOOR SJL-ELEVATOR, 11.1/8 - 14"
1,2,3	DOOR SJL-ELEVATOR, 14.1/8 - 20"
1,2,3	DOOR SJL-ELEVATOR, 20.1/8 - 24.1/2"
1,2,3	DOOR SJL-ELEVATOR, 24.5/8 - 30"

NOTES:
1. HATCHED AREAS ARE CONSIDERED CRITICAL.
2. AREAS NOT HATCHED ARE CONSIDERED NON CRITICAL.
3. THE ACCEPTANCE CRITERIA TO BE APPLIED ARE GIVEN IN THE NOV / VARCO BJ QUALITY ASSURANCE DOCUMENT.

ORACLE PARTNUMBER	N/A		
LEGACY PARTNUMBER	N/A	REFERENCE ONLY	
MATERIAL	CMS01_Grade_120-110		
SURF. FINISH / PAINTSPEC.	-	COLOR	-
WEIGHT	19.4 Lbs	8.8 kg	
CREATED BY	Sonneveld, Leon	REVISION	
CREATED ON	08-Oct-13 02:58:53 PM		
REVISED BY	Sonneveld, Leon		
REVISED ON	10-Oct-13 09:52:31 AM	02	
TC - ECR	00018794	INF	

UNLESS OTHERWISE SPECIFIED
TOLERANCES (PER ANSI Y 14.5)
3 PLACE DECIMAL .XXX ± .010
2 PLACE DECIMAL .XX ± .03
1 PLACE DECIMAL .X ± .1
ANGLES ± .5° DEGREE
BREAK SHARP CORNERS .010 ± .005
MACHINED SURFACES 250
TORCHCUT SURFACES 1000
ALL WELD SYMBOLS ACC. TO ISO
ALL WELD DIMENSIONS ARE 2 DIM'S

DO NOT SCALE DOCUMENT
THIS DOCUMENT IS NOV TEAMCENTER CONTROLLED

NATIONAL OILWELL VARCO

SCALE 1:1
PROJ.
UNITS INCH (mm)

TITLE
CA Body & Door SJL Elevator

SIZE D
DRAWING NO. 10711571-INF
SHEET 1 OF 2

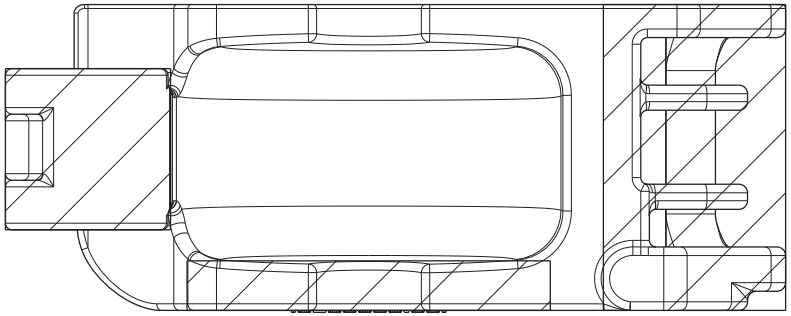

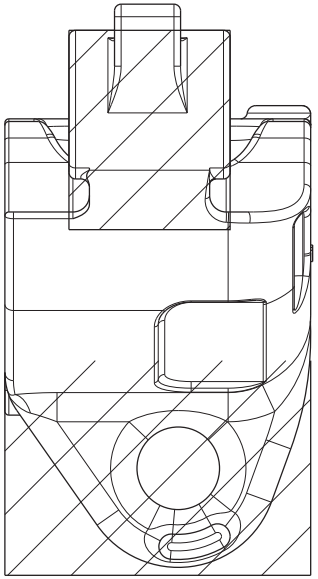

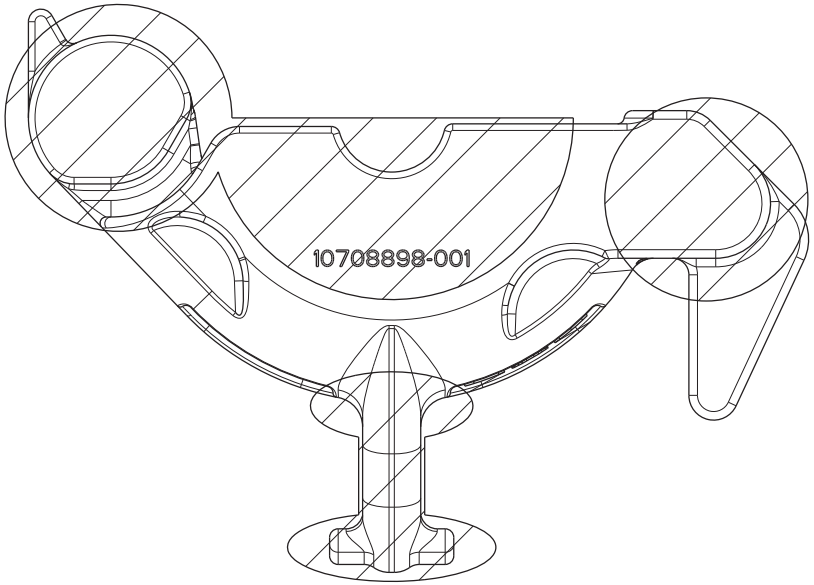

	DESCRIPTION
2	BODY SJL-ELEVATOR, 2.3/8 - 5.1/2"
2	BODY SJL-ELEVATOR, 5.5/8 - 7.3/4"
2	BODY SJL-ELEVATOR, 7.7/8 - 11"
2	BODY SJL-ELEVATOR, 11.1/8 - 14"
2	BODY SJL-ELEVATOR, 14.1/8 - 20"
2	BODY SJL-ELEVATOR, 20.1/8 - 24.1/2"
2	BODY SJL-ELEVATOR, 24.5/8 - 30"

ORACLE PARTNUMBER	N/A		
LEGACY PARTNUMBER	N/A	REFERENCE ONLY	
MATERIAL	CMS01_Grade_120-110		
SURF. FINISH / PAINTSPEC.	-	COLOR	-
WEIGHT	30.9 Lbs	14.0 kg	
CREATED BY	Sonneveld, Leon	REVISION	
CREATED ON	08-Oct-13 02:58:53 PM		
REVISED BY	Sonneveld, Leon		
REVISED ON	10-Oct-13 09:52:31 AM	02	
TC - ECR	00018794	INF	

UNLESS OTHERWISE SPECIFIED
TOLERANCES (PER ANSI Y 14.5)
3 PLACE DECIMAL .XXX ± .010
2 PLACE DECIMAL .XX ± .03
1 PLACE DECIMAL .X ± .1
ANGLES ± .5 DEGREE
BREAK SHARP CORNERS .010 ± .005
MACHINED SURFACES 250
TORCHCUT SURFACES 1000
ALL WELD SYMBOLS ACC. TO ISO
ALL WELD DIMENSIONS ARE 2 DIM'S

DO NOT SCALE DOCUMENT
THIS DOCUMENT IS NOV TEAMCENTER CONTROLLED

NATIONAL OILWELL VARCO

SCALE 1:1
PROJ.
UNITS INCH (mm)

TITLE
CA Body & Door SJL Elevator

SIZE D
DRAWING NO. 10711571-INF
SHEET 2 OF 2